KROMO	TABLE KI1610	REV 02

DISHWASHER KP 150

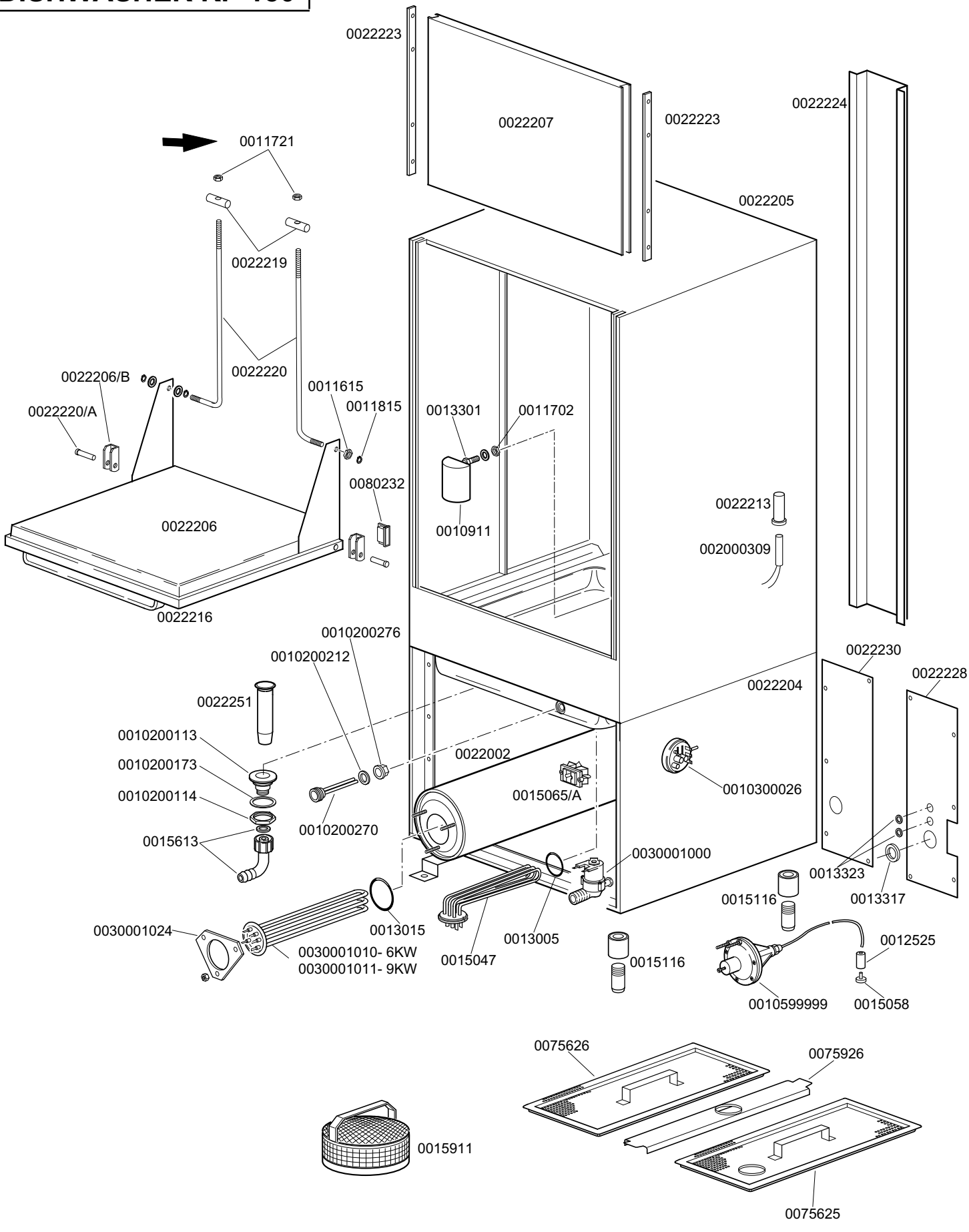

DISHWASHER KP 150			TABLE KI1610
CODE	**DESCRIPTION**	**CODE**	**DESCRIPTION**
0010200113	Floor drain		
0010200114	Drain pipe fitting nut		
0010200173	75x58x2 gasket		
0010200212	31x21x2 rubber gasket		
0010200270	Double sheath		
0010200276	1/2 inch nut for probe		
0010300026	Pressure switch		
0010599999	Shining product dosing device		
0010911	Air trap		
0011615	M8 stainless steel washer		
0011702	M8 stainless steel nut		
0011721	M6 stainless steel nut		
0011815	8 diam. stainless steel shaft clasp		
0012525	Counter-weight for small filter		
0013005	OR 151 EPDM for heating element		
0013015	Boiler heating element OR gasket		
0013301	14x8x1.5 d. gasket		
0013317	40 d. rubber cable-pass		
0013323	13 d. rubber cable-pass		
0015047	3 kw tub heating element		
0015058	Small shining product suction filter		
0015065/A	4228B cable fastener with screw		
0015116	H. 110 complete 2" small foot		
0015613	1"1/4 x30 nylon elbow		
0015911	Complete filter		
002000309	Reed economiser		
0022002	140x490 1000 boiler		
0022204	Base KP150		
0022205	Body KP 150		
0022206	Lower door KP 150		
0022206/B	Hinge door KP 150		
0022207	Top door KP 150		
0022213	Reed holder pipe		
0022216	Neutral stainless steel door		
0022219	Set of small cylinders for door		
0022220	Set of rods + tie rods for door		
0022220/A	Inox pin for door		
0022223	Top door guide		
0022224	KP150 rear panel		
0022228	Right rear guard		
0022230	Left rear guard		
0022251	Overflow device		
0030001000	Single solenoid valve		
0030001010	6kw boiler heating element		
0030001011	9kw boiler heating element		
0030001024	Flange for resistance 6/9		
0075625	Filter with hole		
0075626	Filter without hole		
0075926	Axis double filter holder		
0080232	Magnet for reed		

KROMO	TABLE KI1630	REV 02

DISHWASHER KP 150

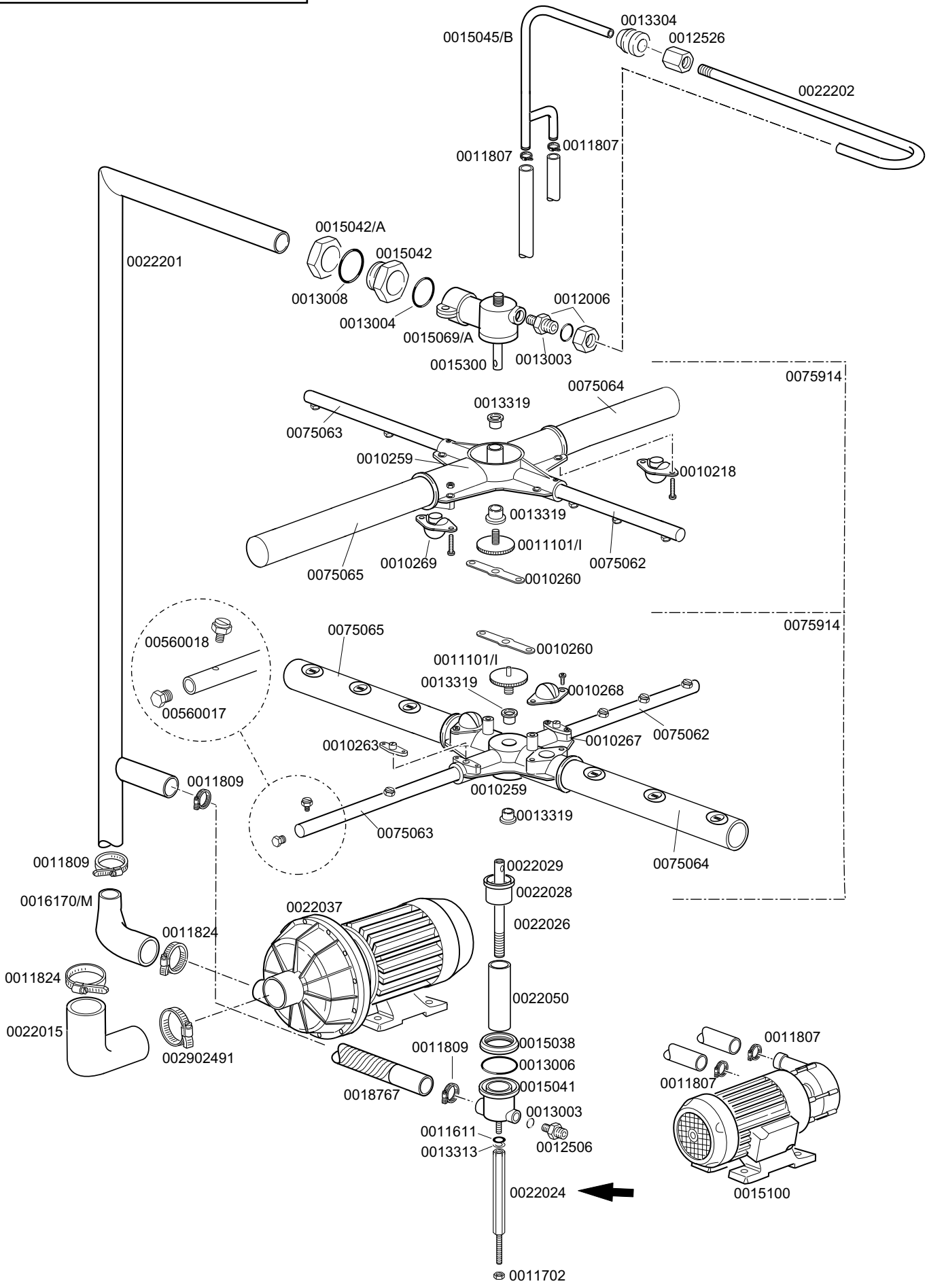

DISHWASHER KP 150			TABLE KI1630
CODE	**DESCRIPTION**	**CODE**	**DESCRIPTION**
0010207	D. 28 grey plastic cap		
0010218	28 d. open flat nozzle		
0010259	4 Ways big wash arm (grey)		
0010260	Grey plate		
0010267	Closed flat rwash jet D.28 (grey)		
0010268	Open flat wash jet D.28 (grey)		
0010269	Closed flat rinse jet D.10 (grey)		
0011101/I	Knurled stainless steel group screw		
0011611	M8 stainless steel plat sliding		
0011702	M8 stainless steel nut		
0011807	12/20 stainless steel clamps		
0011809	430 AISI stainless steel 32-50 clamps		
0011824	50-70 clamp		
0012006	Complete 10 diam. rinse pipe fitting		
0012506	10x17 rubber holder pipe		
0012526	12x14 M10x1 stainless steel coupling		
0012527	D. 10 rinse group plug		
0012528	Complete rinse nozzle		
0013003	OR 112 EP for rinse pipe fitting		
0013004	OR 3137 EPDM for 35 diam. wash pipe		
0013006	OR 3156 EPDM x lower wash distribution		
0013008	OR 147 EPDM		
0013313	8x15x2 D. gasket		
0013319	PTFE+CB H11,5 sliding washer		
0015038	Lower wash connection ferrule		
0015042	1"1/4 complete gas ferrule		
0015042/A	1" 1/4 nut		
0015045/B	3 way complete pipe rinse		
0015069/A	Top glass wash+rinse		
0015100	Pressure increase pump		
0015300	Top rinse axis		
0016170/M	50/30 coupling		
0018767	30.310 flex rony coupling		
0022015	1000 type suction coupling		
→ 0022024	Lower tie rod		
0022026	Lower rinse extension cord type 1000		
0022028	Lower wash stainless steel glass		
0022029	Lower rinse axle		
0022037	Washing pump HP 2.0 1226 "L" 220/380/50		
0022050	35x135 d. stainless steel coupling		
0022201	Wash ramp		
0022202	Top rinse pipe		
002902491	60-80 clamp		
00560017	Cover for rinse arm M9x1		
00560018	Stainless steel rinse jet M5		
0075062	Right rinse arm		
0075063	Left rinse arm		
0075065	Left wash arm		
0075604	Right wash arm		
0075914	stainlees steel upper and lower wash group		

KROMO	TABLE KI1640	REV 02

DISHWASHER KP 150

From serial Nr.01007193 on

DRAIN PUMP

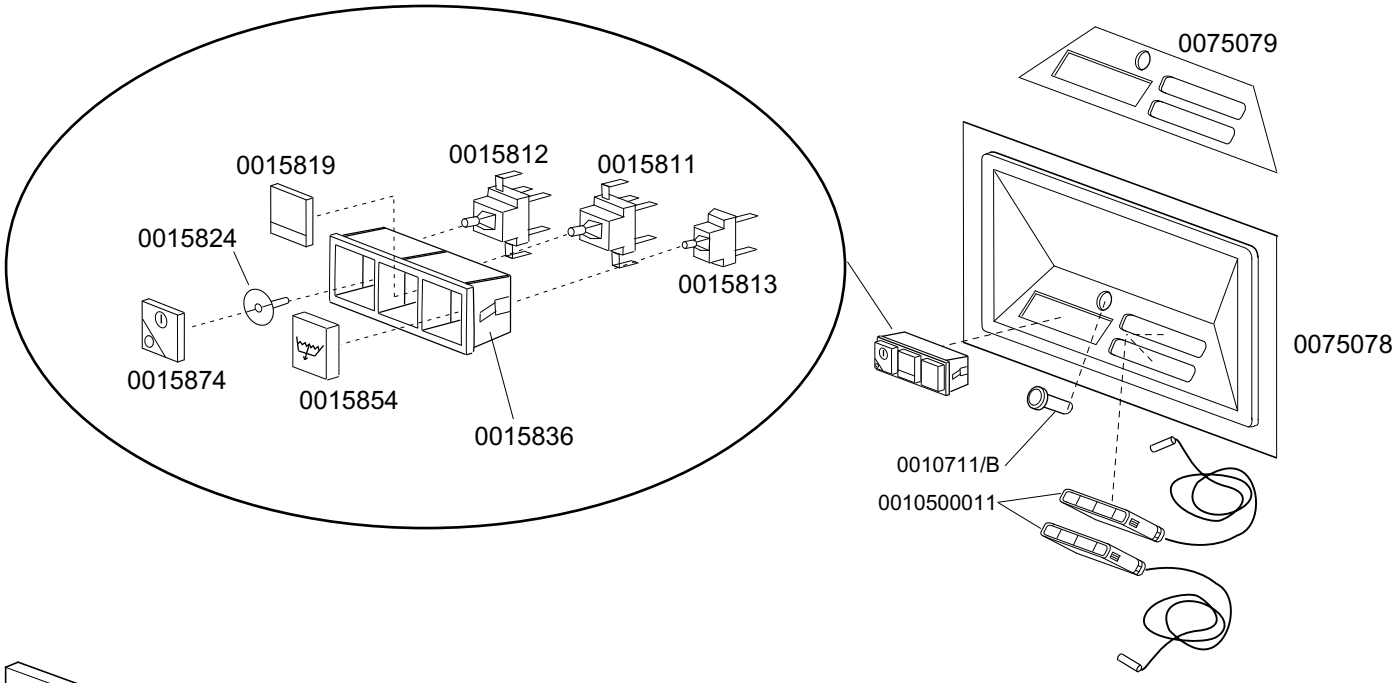

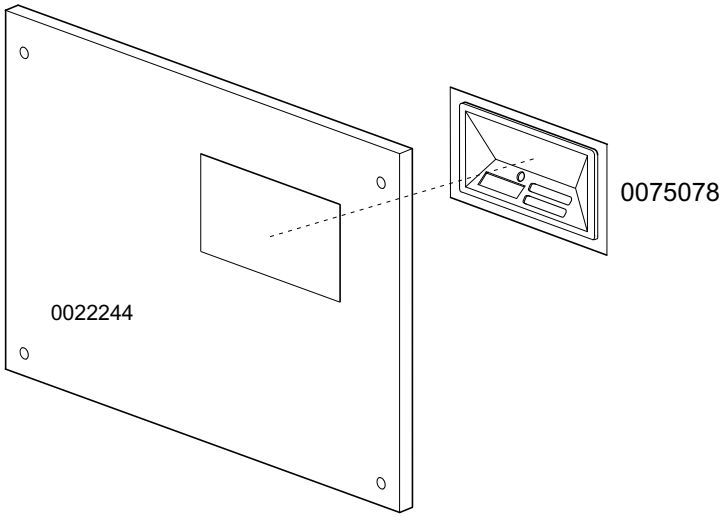

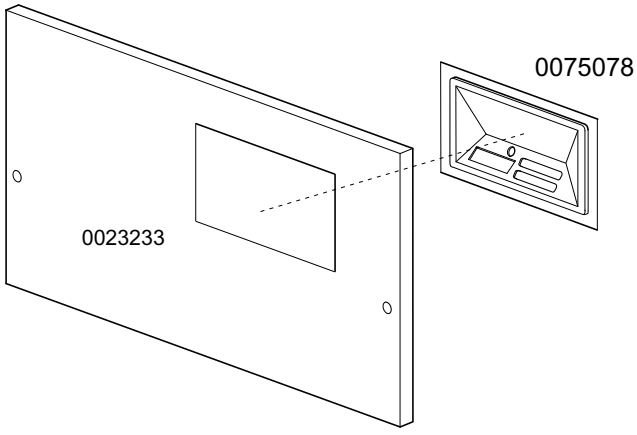

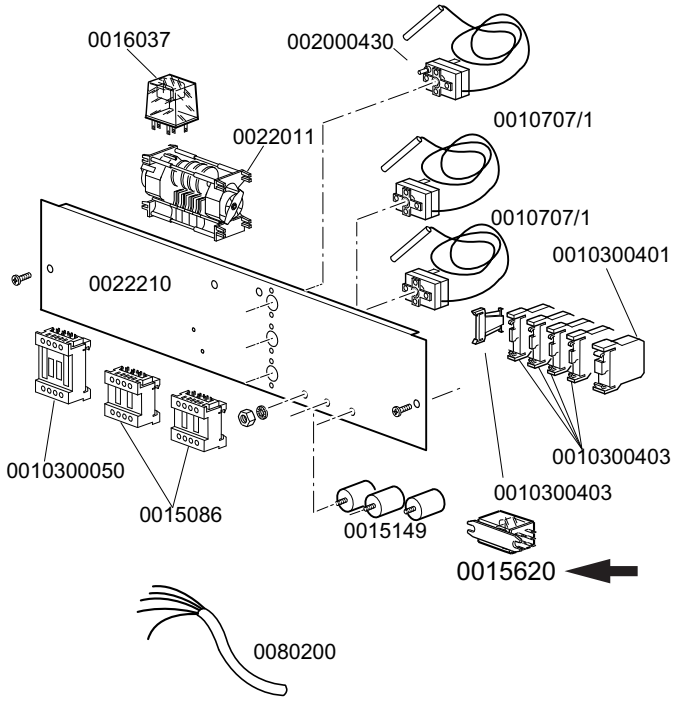

DISHWASHER KP 150			TABLE KI1640
CODE	**DESCRIPTION**	**CODE**	**DESCRIPTION**
0010300050	25A 4NA 200V 50HZ meter		
0010300401	6 mm2 yellow green clamp		
0010300403	6 mm2 clamp		
0010500011	Thermometer		
0010707/1	Thermostat		
0010711/B	Small temp.signaling green pilot light		
0015086	230V 50/60Hz remote control switch		
0015149	Low noise filter F3		
0015620	16A Bipolar relay		
0015811	Deviator switch electric omponent 16A		
0015812	16A starter electric component		
0015813	16A unipolar switch electric component		
0015819	Q7 Yellow push button		
0015824	Green-orange cam		
0015824/A	Yellow-blue cam		
0015836	Grey SQ3 support		
0015854	Q5 push button for DRAI PUMP		
0015874	Q6 green main switch 0/1		
0016037	B 1-2 relay		
002000430	Conveyor safety thermostat		
0022011	220V50hz. 2/4' timer		
0022210	Component holder		
0022244	Lower door for inox panel KP-150		
0023233	Lower door for inox panel KP-151		
0075078	Stainless steel panel		
0075079	Panel label		
0080200	5x4x3400 power supply cable		