CCF-10 REF. 19036263 / CCF-10 CI REF. 19036347

CCF-20 REF. 19036264 / CCF-20 CI REF. 19036348

CCF-40 REF. 19036265 / CCF-40 CI REF. 19036350

Versión 2016-01

## CCF-10

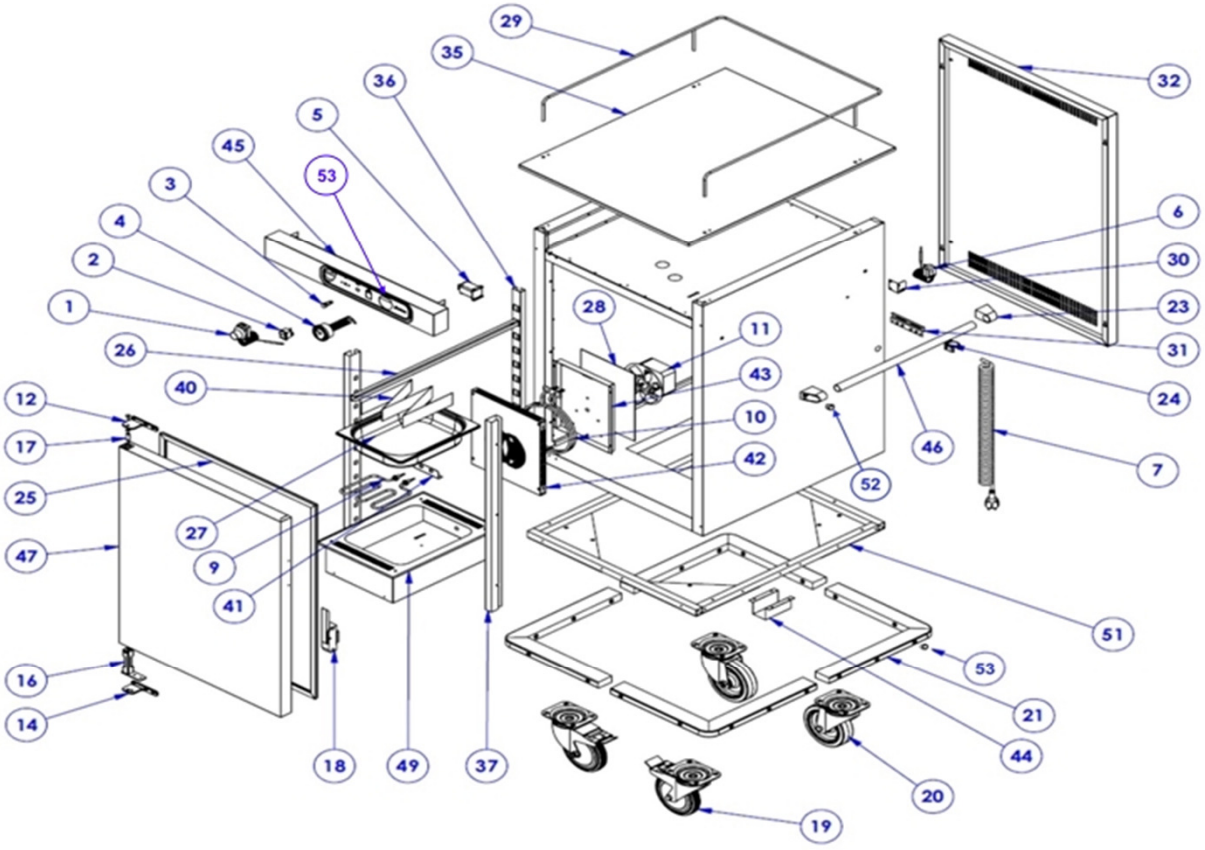


**Notes:** **CHECK BEFORE ORDER SPARE PARTS**

**1**-№/Code in legend with "*" check for S/№ before 03-2015

**2**-№/Code in legend with "X" for **other V** than 220v 1/PH 50/60 Hz

**COMPROBAR ANTES DE PEDIR RECAMBIOS**

№ de Código marcados "*" Comprobar para №/S anterior a 03-2015

№ de Código marcados con "X" para **V** que no sea 220v 1/N 50/60Hz

CCF-10 REF. 19036263 / CCF-10 CI REF. 19036347

CCF-20 REF. 19036264 / CCF-20 CI REF. 19036348

CCF-40 REF. 19036265 / CCF-40 CI REF. 19036350

Versión 2016-01

## CCF-20

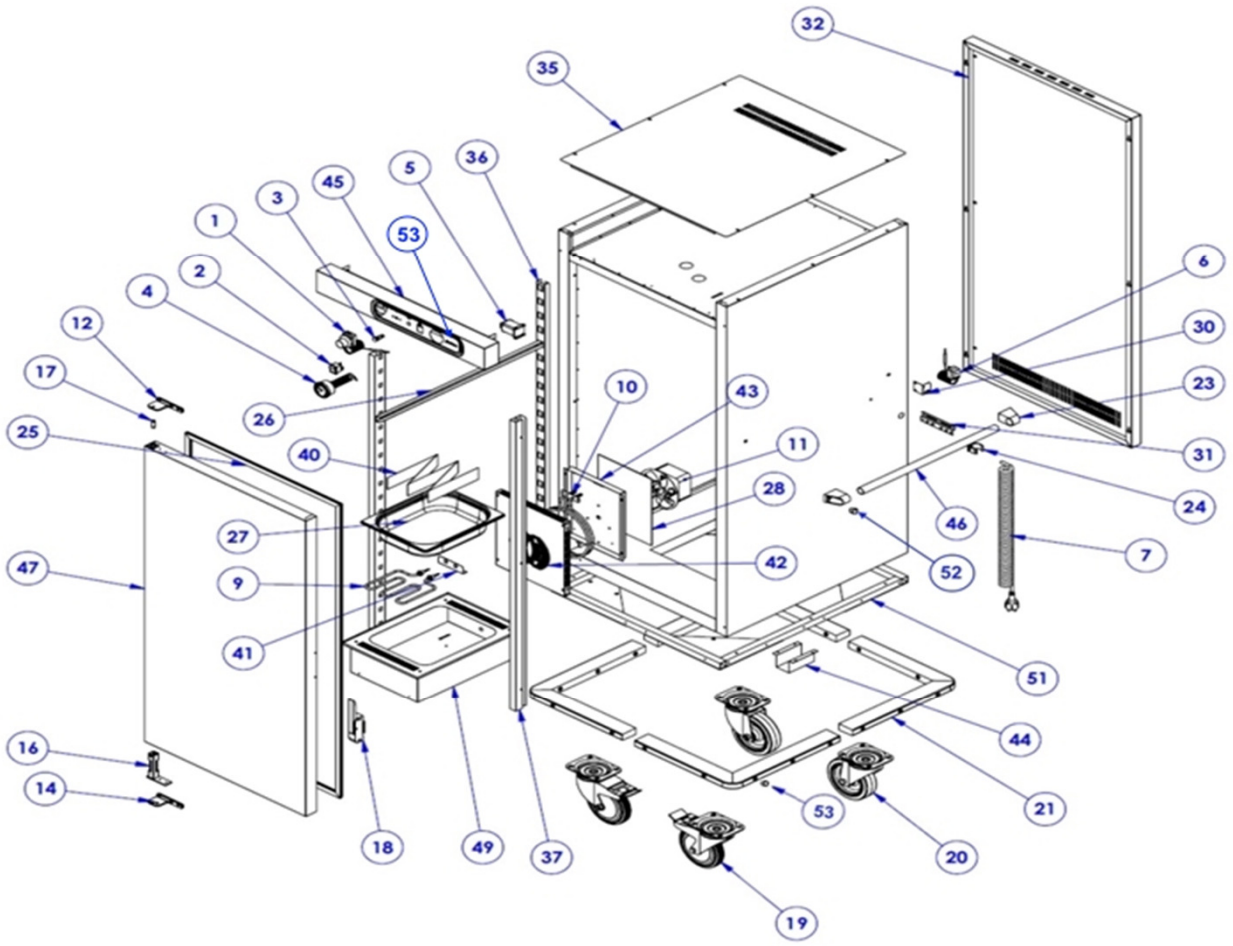


**Notes:** CHECK BEFORE ORDER SPARE PARTS

**1**-№/Code in legend with "*" check for S/№ before 03-2015

**2**-№/Code in legend with "X" for **other V** than 220v 1/PH 50/60 Hz

COMPROBAR ANTES DE PEDIR RECAMBIOS

№ de Código marcados "*" Comprobar para №/S anterior a 03-2015

№ de Código marcados con "X" para **V** que no sea 220v 1/N 50/60Hz

CCF-10 REF. 19036263 / CCF-10 CI REF. 19036347

CCF-20 REF. 19036264 / CCF-20 CI REF. 19036348

CCF-40 REF. 19036265 / CCF-40 CI REF. 19036350

Versión 2016-01

## CCF-40

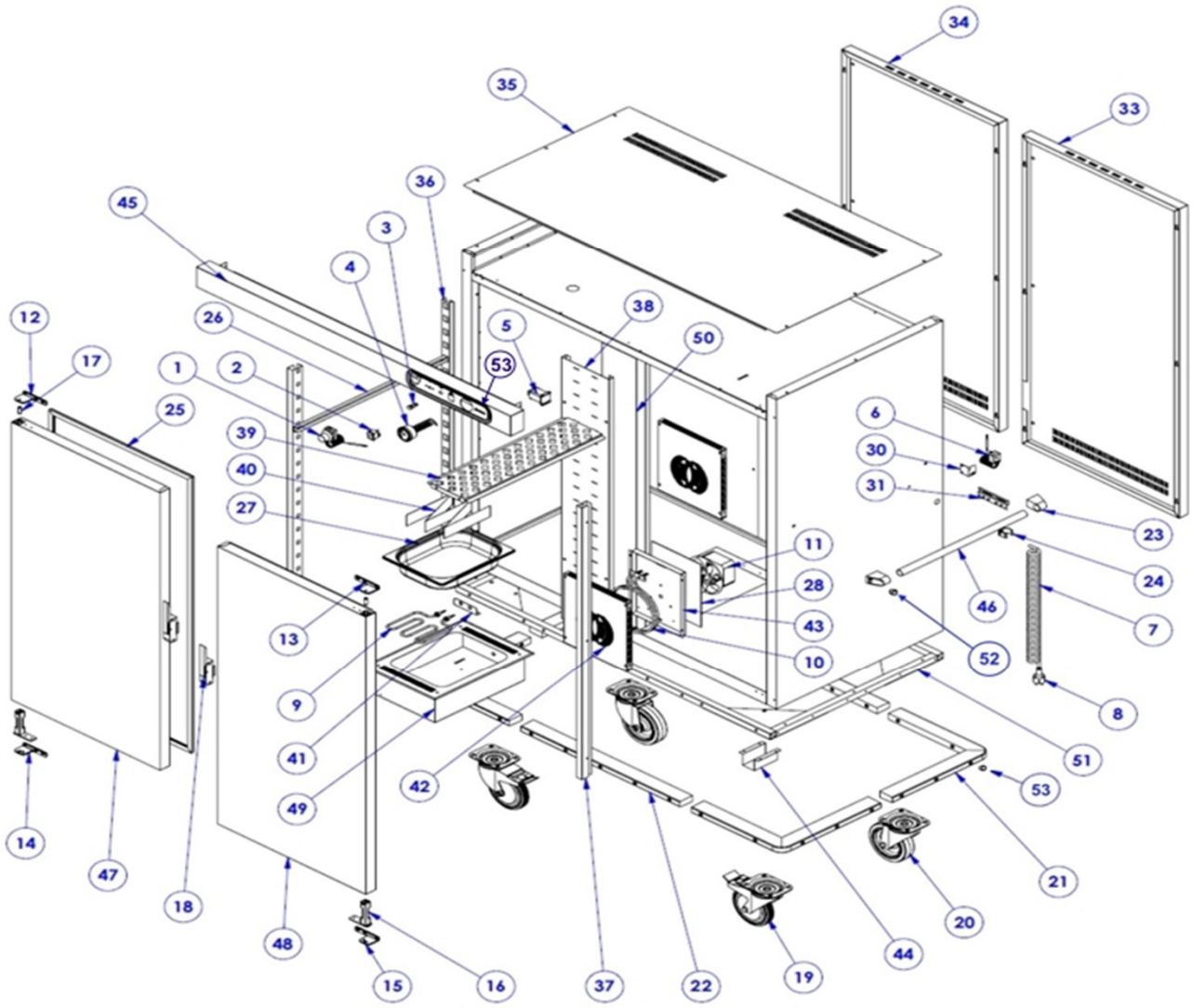


**Notes:** CHECK BEFORE ORDER SPARE PARTS

**1**-№/Code in legend with "*" check for S/№ before 01-2016

**2**-№/Code in legend with "X" for **other V** than 220v 1/PH 50/60 Hz

COMPROBAR ANTES DE PEDIR RECAMBIOS

№ de Código marcados "*" Comprobar para №/S anterior a 01-2016

№ de Código marcados con "X" para **V** que no sea 220v 1/N 50/60Hz

# HOT TROLLEYS / CARROS CALIENTES

FAGOR

CCF-10 REF. 19036263 / CCF-10 CI REF. 19036347

CCF-20 REF. 19036264 / CCF-20 CI REF. 19036348

CCF-40 REF. 19036265 / CCF-40 CI REF. 19036350

Versión 2016-01

| Nº | CODE CÓDIGO | RECOM. | DESCRIPTION | DESCRIPCIÓN | CCF-10 | CCF-20 | CCF-40 | CCF-10 CI | CCF-20 CI | CCF-40 CI |
|---|---|---|---|---|---|---|---|---|---|---|
| 1 | 12034068 | • | 0-90 º C NT129BQ THERMOSTAT | TERMOST.0-90ºC NT124FG | 1 | 1 | 1 | 1 | 1 | 1 |
| 2 | 12037293 | • | SWITCH BIPOLAR AMB. ON/OFF | INT.BIP.AMB.O/I CONTAC.REFORZ. | 1 | 1 | 1 | 1 | 1 | 1 |
| 3 | 12037853 | | PILOT AMB.FUNCION | PILOTO AMB.FUNCION REDONDO | 1 | 1 | 1 | 1 | 1 | 1 |
| 4 | 12047043 | • | TERMOMETER.RED.0/120 ºC D.52 EDENOX | TERMOMT.RED.0/120ºC D.52 EDENOX | 1 | 1 | 1 | 1 | 1 | 1 |
| 5A | 12024011 | • | 230V AC 50/60HZ 16A 4 WAY UL CONTACTOR N | CONTACTOR 230V AC 50/60HZ 16A 4via UL | 1 | 1 | 1 | 1 | 1 | 1 |
| 5X | 12067553 | • | AF 16-30-10 CONTACTOR 100/250V | CONT.WEIDM. 32A 120V 60Hz | X | X | X | X | X | X |
| 6 | 12034756 | • | THERMOSTAT .SAFETY.SP-041 BQ 125ºC | TERMOST.SEG.SP-041 BQ 125ºC | 1 | 1 | 2 | 1 | 1 | 2 |
| 7A | 12033892 | | HOSE.CURL 3X1,5mm1m | MANG.RIZADA 3X1.5X670 REPOSO | 1 | 1 | | | | |
| 7B | 12033428 | | HOSE.CURL 3X2,5mm1m | MANG.RIZADA 3X2.5X670 REPOSO | | | 1 | | | |
| 7C | 12132684 | | HOSE.CURL W/ENGLISH PLUG 3x1,5mmx670 | MANG.RIZADA INGLESA 3X1.5X670 REPOSO | | | | 1 | 1 | |
| 7D | 12132685 | | HOSE.CURL W/ENGLISH PLUG 3X2,5mmx670 | MANG.RIZADA INGLESA 3X2.5X670 REPOSO | | | | | | 1 |
| 9 | 12034860 | • | ELEMENT..220V 480W (208X160) ACP | RESIST.220v 480W (208x160) ACP | 1 | 1 | 1 | 1 | 1 | 1 |
| 9X | 12050232 | • | RESIT.120V 60Hz 480W ACP | RESIT.120V 60Hz 480W ACP | X | X | X | X | X | X |
| 10 | 12034379 | • | BACKING ELEMENT 1400W-220V | RESIST.AL AIRE RESER1400W-220V | 1 | 1 | 2 | 1 | 1 | 2 |
| 10X | 12050233 | • | RESSIST.AIR CCB 1400W 120V 60Hz | RESIT.AIRE CCB 1400W 120V 60Hz | X | X | X2 | X | X | X2 |
| 11 | 12032214 | • | FAN. CCB 55462.40940 RRL140 | VENTILADOR CCB 55462.40940 RRL140 | 1 | 1 | 2 | 1 | 1 | 2 |
| 11X | 12050228 | • | FAN CCB RRL140 120V 60HZ | VENTILADOR CCB RRL140 120V 60HZ | X | X | X2 | X | X | X2 |
| 12 | 12041474 | | HINGE SUPPORT UPPER LEFT THREAD M-6 | SOPORTE BISAGRA SUPER.IZQD. ROSCA M-6 | 1 | 1 | 1 | 1 | 1 | 1 |
| 13 | 12041472 | | HINGE BRACKET UPPER RIGHT THREAD M-6 | SOPORTE BISAGRA SUPER.DCHA. ROSCA M-6 | | | 1 | | | 1 |
| 14 | 12036986 | • | HINGE BRACKET LOWER LEFT | SOPORTE BISAGRA INFR.IZQD. | 1 | 1 | 1 | 1 | 1 | 1 |
| 15 | 12037017 | • | HINGE BRACKET LOWER RIGHT | SOPORTE BISAGRA INFR.DRCH. | | | 1 | | | 1 |
| 16 | 12038130 | • | HINGE TRS1D DOUBLE SPRING DV-2068 | BISAGRA TRS1D DOBLE MUELLE DV-2068 | 1 | 1 | 2 | 1 | 1 | 2 |
| 17 | 12038076 | | INOX M6 ROSC.INT SHAFT30X10BEARING | EJE30x10VARIL INOX ROSC.INT M6 | 1 | 1 | 2 | 1 | 1 | 2 |
| 18 | 12032862 | | DOOR LOCKING G-885C | CIERRE CON NARIZ SUPLEMTO | 1 | 1 | 2 | 1 | 1 | 2 |
| 19 | 12031783 | • | WHEEL D=160 W/BRAKE | RUEDA D=160 C/FR. | 2 | 2 | 2 | 2 | 2 | 2 |
| 20 | 12032030 | • | WHEEL D=160 NO/BRAKE | RUEDA D=160 S/FR. | 2 | 2 | 2 | 2 | 2 | 2 |
| 21 | 12115300 | | BUMPER CORNER CCB NEW v02 | ESQUINERA PARAGOLPES CCB NUEVO v02 | 4 | 4 | 4 | 4 | 4 | 4 |
| 22 | 12115299 | | BUMPER RAIL CCB-40 v02 | LARGUERO PARAGOLPES CCB-40 v02 | | | 2 | | | 2 |
| 23 | 12130885 | • | HOT VEHICLES HANDLE SUPPORT CCE (GREY) | SOPORTE TIRADOR CARROS CAL. V02 GRIS | 4 | 4 | 4 | 4 | 4 | 4 |
| 24 | 12057439 | | CLAMP P COND/STAPLEGFURN | PINZA DE PLASTICO SUJETATUBOS | 1 | 1 | 1 | 1 | 1 | 1 |
| 25A | 12029402 | • | SILICONE DOOR SEAL 1230x630 | BURLETE SILICONA 1230x630 | | 1 | 2 | | 1 | 2 |
| 25B | 12029828 | • | SILICONE DOOR SEAL 796x630 | BURLETE SILICONA 796x630 | 1 | | | 1 | | |
| 26 | 12037948 | | GUIDE GN 2/1 U 662 mm | GUIA GN 2/1 U 662 mm | 20 | 40 | 40 | 20 | 40 | 40 |
| 27 | 12048007 | | GN INOX CHAMBER 1/2-65 CCB | CUBETA INOX.GASTRON 1/2-65 CCB | 1 | 1 | 1 | 1 | 1 | 1 |
| 28 | 12032580 | | BOARD ISUPPORT.LAN 750 214X285X2 | JUNTA ISOPLAN 750 214x285x2 | 1 | 1 | 2 | 1 | 1 | 2 |
| 29* | 12079587 | | BANISTER CCB-10 | BARANDILLA CCB-10 | 1 | | | 1 | | |
| 30 | 12071844 | | SAFETY THERMOSTAT SUPPORT | SOPORTE TERMOSTATO SEGURIDAD | 1 | 1 | 2 | 1 | 1 | 2 |
| 31 | 12037799 | | PROTECTOR OF PROBE CCB | PROTECTOR DE SONDA CCB | 1 | 1 | 2 | 1 | 1 | 2 |
| 32A | 12050393 | | EXTERNAL FAN SUPPORT CCB-10- 220V | RESPALDO EXTR.VENTILADOR CCB-10-220V | 1 | | | 1 | | |
| 32AX | 12071806 | | EXTERNAL FAN SUPPORT CCB-10- 120V | RESPALDO EXTR.VENTILADOR CCB-10-220V | X | | | X | | |
| 32B | 12029241 | | EXTERNAL FAN SUPPORT CCB-20 | RESPALDO EXTR.VENTILADOR CCB-20 | | 1 | | | 1 | |
| 32BX | 12071805 | | EXTERNAL FAN SUPPORT CCB-20-120V | RESPALDO EXTR.VENTILADOR CCB-20-120V | | X | | | X | |
| 33 | 12050392 | | EXTERNAL FAN SUPPORT RIGHT CCB-40 | RESPD.EXTR.VENTILADOR DCH. CCB-40 | | | 1 | | | 1 |
| 34 | 12050391 | | EXTERNAL FAN SUPPORT LEFT CCB-40 | RESPD.EXTR.VENTILADOR IZD. CCB-40 | | | 1 | | | 1 |
| 33X | 12071804 | | EXTERNAL FAN SUPPORT RIGHT CCB-40-120V | RESPD.EXTR.VENTILADOR DCH. CCB-40-120V | | | X | | | X |
| 34X | 12071803 | | EXTERNAL FAN SUPPORT LEFT CCB-40-120V | RESPD.EXTR.VENTILADOR IZD. CCB-40-120V | | | X | | | X |
| 35A | 12079586 | | TOP COVER CCB-10 | TAPA TECHO CCB-10 | 1 | | | 1 | | |
| 35B | 12050407 | | TOP COVER CCB-20 | TAPA TECHO CCB-20 | | 1 | | | 1 | |
| 35C | 12041455 | | TOP COVER CCB-40 | TAPA TECHO CCB-40 | | | 1 | | | 1 |
| 36A | 12071851 | | INNER RACK CCB-10 | CREMALLERA INTERIOR CCB-10 | 2 | | | 2 | | |
| 36B | 12071847 | | INNER RACK CCB-20 | CREMALLERA INTERIOR CCB-20 | | 2 | 2 | | 2 | 2 |
| 37A | 12071850 | | FRONT RACK CCB-10 | CREMALLERA DELANTERA CCB-10 | 2 | | | 2 | | |
| 37B | 12050405 | | RIGHT FRONT RACK CCB-20 | CREMALLERA DELANTERA DRCH. CCB-20 | | 1 | 1 | | 1 | 1 |
| 37C | 12050406 | | LEFT FRONT RACK CCB-20 | CREMALLERA DELANTERA IZQD. CCB-20 | | 1 | 1 | | 1 | 1 |
| 38* | 12071852 | | CENTRAL SUPPORT RACK CCB-40 | CREMALLERA CENTRAL RESPALDO CCB-40 | | | 1 | | | 1 |
| 39* | 12050404 | | SUPPLEMENTARY GRILL CCB-40 | PARRILLA SUPLEMENTO CCB-40 | | | 20 | | | 20 |
| 40 | 12048008 | | BREAKWATER CCB | ROMPEOLAS CCB | 1 | 1 | 1 | 1 | 1 | 1 |
| 41 | 12050364 | | HEATING ELEMENT SUPPORT ACP | SOPORTE RESISTENCIA ACP | 1 | 1 | 1 | 1 | 1 | 1 |

| | | | | | | | | | | | |
|---|---|---|---|---|---|---|---|---|---|---|---|
| 42 | 12035240 | | FAN PROTECTION | PROTECCION VENTILADOR | 1 | 1 | 2 | 1 | 1 | 2 |
| 43 | 12050403 | | INNER HEATING SUPPORT CCB | SOPORTE INTERIOR RESISTENCIA | 1 | 1 | 2 | 1 | 1 | 2 |
| 44* | 12071861 | | HEATING ELEMENT CABLE COVER | CUBRECABLES RESISTENCIA | 1 | 1 | 1 | 1 | 1 | 1 |
| 45A* | 12050398 | | CONTROL PANEL | CUADRO MANDOS CCB-20 | 1 | 1 | | 1 | 1 | |
| 45B* | 12071798 | | CONTROL PANEL CCB-40 | CUADRO MANDOS CCB-40 | | | 1 | | | 1 |
| 46 | 12036038 | | HANDLE TUBE | TUBO TIRADOR | 2 | 2 | 2 | 2 | 2 | 2 |
| 47A* | 12084491 | | DOOR ASSEMBLY CCB-10 | CONJUNTO PUERTA CCB-10 | 1 | | | 1 | | |
| 47B* | 12079591 | | DOOR ASSEMBLY CCB-20 | CONJUNTO PUERTA CCB-20 | | 1 | 1 | | 1 | 1 |
| 48* | 12084492 | | RIGHT DOOR ASSEMBLY CCB-40 | CONJUNTO PUERTA DRCHA.CCB-40 | | | 1 | | | 1 |
| 49* | 12084505 | | BOTTOM HEAT UNIT ASSEMBLY | CONJUNTO UNIDAD CALORIFICA FONDO | 1 | 1 | 1 | 1 | 1 | 1 |
| 50* | 12084468 | | VERTICAL FRONT ASSEMBLY CCB-40 | CONJUNTO FRONTI VERTICAL CCB-40 | | | 1 | | | 1 |
| 51A* | 12123821 | | CHASSIS CCB-20 v03 | CHASIS CCB-20 V.3 | 1 | 1 | | 1 | 1 | |
| 51B* | 12123822 | | CHASSIS CCB-40 v03 | CHASIS CCB-40 V.3 | | | 1 | | | 1 |
| 52 | 12132778 | | HANDLE PLASTIC HOLE COVER CCB (GREY) | TAPETA SOPORTE TIRADOR CCB (GRIS) | 4 | 4 | 4 | 4 | 4 | 4 |
| 53 | 12115302 | | BUMPER HOLE COVER CCB | TAPETA PARAGOLPES CCB | 24 | 24 | 36 | 24 | 24 | 36 |
| 54 | 12132240 | | PANEL STICKER 345X68 CCF (FAGOR) | PEGAT.345x68 CUADRO CCB (EDENOX) | 1 | 1 | 1 | 1 | 1 | 1 |