SIMAG

SDE 34

SDE 40

R 134 A VERSION

HE (High Efficiency)

SPARE PARTS LIST
CATALOGO RICAMBI
CATALOGUE PIÈCES DÉTACHÉES
ERSATZTEILENKATALOG

REV. 10/2015

PAGE PAGINA PAGE SEITE	TABLE OF CONTENTS	INDICE	TABLE DES MATIERES	INHALTVERZEICHNIS
1	TABLE OF CONTENTS	INDICE	TABLE DES MATIERES	INHALTVERZEICHNIS
2/3	UNIT PANELS	ASSIEME MOBILE	ENS. CAROSSERIE	MACHINE GEHAUSE
4/5	REFRIGERANT SYSTEM AIR COOLED	SISTEMA REFRIGERANTE RAFFR. AD ARIA	CIRCUIT FRIGORIFIQUE REFROID. A AIR	GEFRIERSYSTEM LUFTGEKUEHLT
6/7	REFRIGERANT SYSTEM WATER COOLED	SISTEMA REFRIGERANTE RAFFR. AD ACQUA	CIRCUIT FRIGORIFIQUE REFROID. A EAU	GEFRIERSYSTEM WASSERGEKUEHLT
8/9	WATER SYSTEM	CIRCUITO IDRAULICO	CIRCUIT HYDRAULIQUE	WASSER SYSTEM
10/11	CONTROL BOX	SCATOLA DI CONTROLLO	BOITE ELECTRIQUE	SCHALTSCHRANK

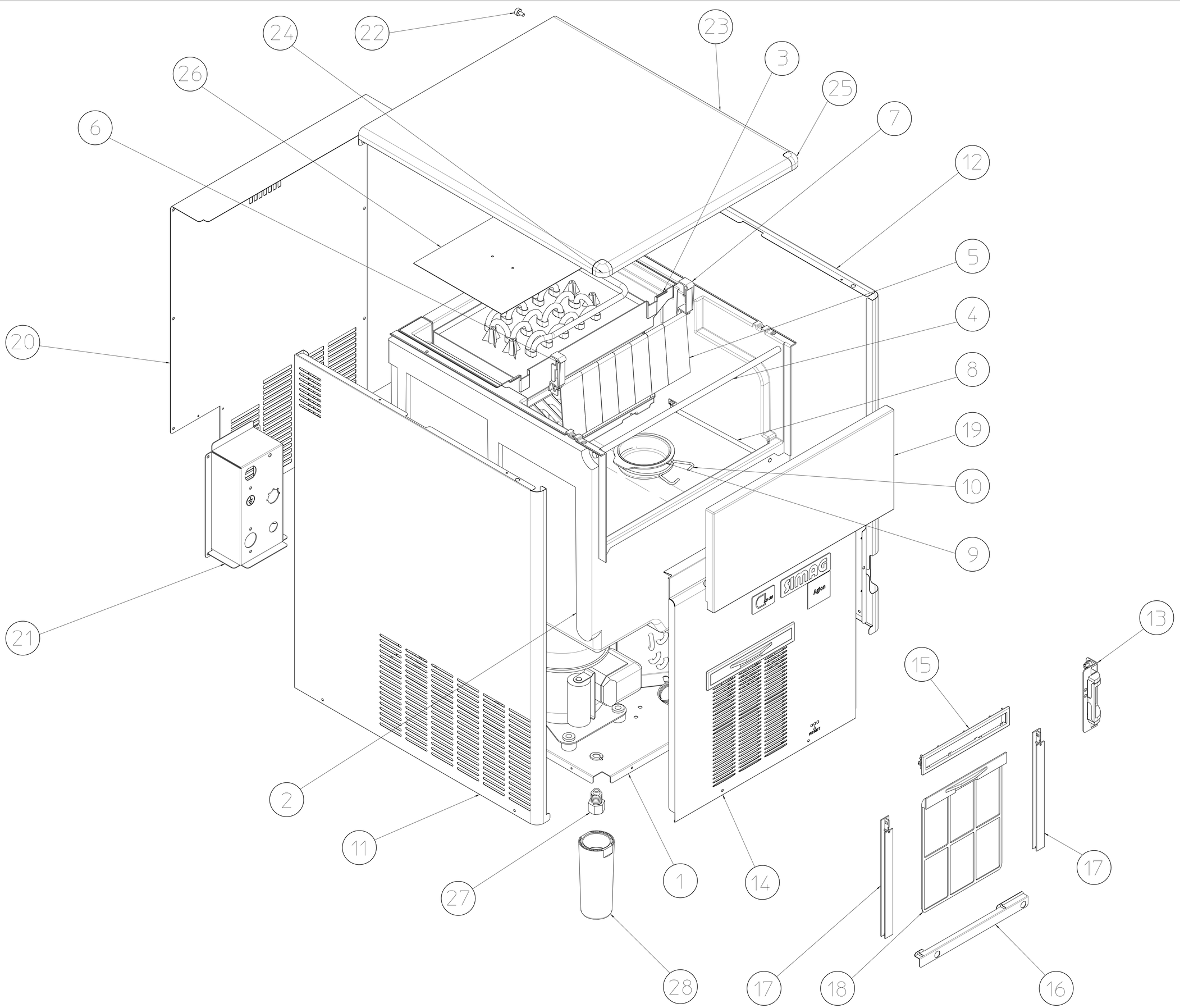

24
22
23
3
26
25
6
7
12
5
4
20
8
19
10
9
21
13
15
2
11
27
1
14
17
28
17
18
16

SDE 34 - SDE 40 -UNIT PANELS - ASSIEME MOBILE - ENS. CARROSSERIE - MACHINE GEHAUSE-

ITEM NO POS. NO REP. NO REF. NO	PART NO CODICE REFERENCE STUECK NR	DESCRIPTION	DESCRIZIONE	DESIGNATION	BESCHREIBUNG
1	702532 00	BASE SDE 34	PIASTRA DI BASE SDE 34	PLAQUE DE BASE SDE 34	GRUNDPLATTE SDE 34
	782692 00	BASE SDE 40	PIASTRA DI BASE SDE 40	PLAQUE DE BASE SDE 40	GRUNDPLATTE SDE 40
2	782094 03	INSULATED BIN ASSY SDE 34	ASSIEME CELLA ISOLATA SDE 34	ENS. CABINE SDE 34	ISOLIEREISSPEICHER SDE 34
	782094 04	INSULATED BIN ASSY SDE 40	ASSIEME CELLA ISOLATA SDE 40	ENS. CABINE SDE 40	ISOLIEREISSPEICHER SDE 40
3	660635 05	EVAPORATOR HOUSING SDE 34	INVOLUCRO EVAPORATORE SDE 34	CHAMBRE INTERIEUR SDE 34	CELLE INTERN SDE 34
	660635 06	EVAPORATOR HOUSING SDE 40	INVOLUCRO EVAPORATORE SDE 40	CHAMBRE INTERIEUR SDE 40	CELLE INTERN SDE 40
4	732016 07	BIN DOOR BRACKET	ASTA SPORTELLO	TIGE PORTE	KLAPPENACHSE
5	783171 01R	CURTAIN ASSY	ASSIEME TENDINA	ENS. LAMELLE	ABDECKKLAPPE GESAMTHEIT
6	660388 00	LEFT CURTAIN SUPPORT	SUPP. TENDINA SINISTRO	SUPP. LAMELLE GAUCHE	LINKE ABDECKLAPPE HALTERUNG
7	660388 01	RIGHT CURTAIN SUPPORT	SUPP. TENDINA DESTRO	SUPP.LAMELLE DROITE	RECHTE ABDECKLAPPE HALTERUNG
8	732016 07	BULB HOLDER	TUBO PORTABULBO	TUBE PORTEBULBE	FUEHLERHALTER
9	660741 00	PLASTIC PLUG	TAPPO INVOLUCRO EVAPORAT.	BOUCHON EN PLASTIQUE	PLASTIKSTOPFEN
10	460047 01	SPRING	MOLLA	RESSORT	FEDER
11	722303 00	LEFT SIDE PANEL S.S.	PANNELLO SINISTRO INOX	JOUE GAUCHE ACIER INOX	LINKE GEHÄUSESEITE EDELSTAHL
12	722302 00	RIGHT SIDE PANEL S.S.	PANNELLO DESTRO INOX	JOUE DROITE ACIER INOX	RECHTEGEHÄUSESEITE EDELSTAHL
13	660882 01	FRONT SWITCH PLASTIC PROTEC.	CARTER PROTEZIONE INTERRUTT.	CARTER PROTECTION INTERRUPT	SCHALTERABDECKUNG
14	722305 00	FRONT. PANEL AIR VERS. SDE 34	PANNEL. ANTER. VERS. ARIA SDE 34	PANNEAU AVANT PAR AIR SDE 34	VORDERWAND EDELST. LUFT SDE 34
	722305 01	FRONT. PANEL WAT. VERS. SDE 40	PANNEL. ANTER. VERS. ACQUA SDE 40	PANNEAU AVANT REFR. EAU SDE 40	VORDERWAND EDELST. WASSER SDE 40
15	660886 01	AIR FILTER SEAT	SEDE FILTRO ARIA	SIEGE FILTER A AIR	LUFTFILTERHALTER
16	724422 01	BRACKET SLIDE AIR FILTER	SUPPORTO GUIDA FILTRO ARIA	SUPPORT GLISSIERE FILTER A AIR	TRAGER FUHRUNF FUR LUFTFILTER
17	660887 01	SLIDE AIR FILTER	GUIDA FILTRO ARIA	GLISSIERE FILTER A AIR	FUHRUNF FUR LUFTFILTER
18	660885 01	AIR FILTER	FILTRO ARIA	FILTER A AIR	LUFT FILTIER
19	782092 05R	BIN DOOR	SPORTELLO	PORTE CABINE	SPEICHERTUER
20	702533 00	REAR PANEL	PANNELLO POSTERIORE	PANNEAU POSTERIEUR	HINTERE ABDECKUNG
21	702526 00	METAL BRACKET FOR FITTING	SUPPORTO ATTACCHI	SUPPORT DE RACCORDS	METALLTRÄGER
22	650806 00	REAR STUD	PERNO POSTERIORE	AXE	STIFT
23	722304 00	TOP PANEL S.S.	PANNELLO SUPERIORE INOX	ENS. COUVERCLE	DECKEL GESAMTHEIT
24	660884 05	LEFT TOP CAP	TAPPO IN PLASTICA SINISTRO	CAPUCHON EN PLAST. GAUCHE	PLASTIK PROFEN LINK
25	660884 04	RIGHT TOP CAP	TAPPO IN PLASTICA DESTRO	CAPUCHON EN PLAST. DROITE	PLASTIK PROFEN RECHT
26	650708 00	PLASTIC COVER	COPERTURA IN PLASTICA	PROTECTION EN PLASTIQUE	PLASTIKABDECKUNG
27	650382 01	LEVELLING FOOT SDE 34	PIEDE REGOLABILE SDE 34	PIED RÉGLABE SDE 34	GERÄTEFUSS SDE 34
28	651469 00	LEVELLING FOOT SDE 40	PIEDE REGOLABILE SDE 40	PIED RÉGLABE SDE 40	GERÄTEFUSS SDE 40

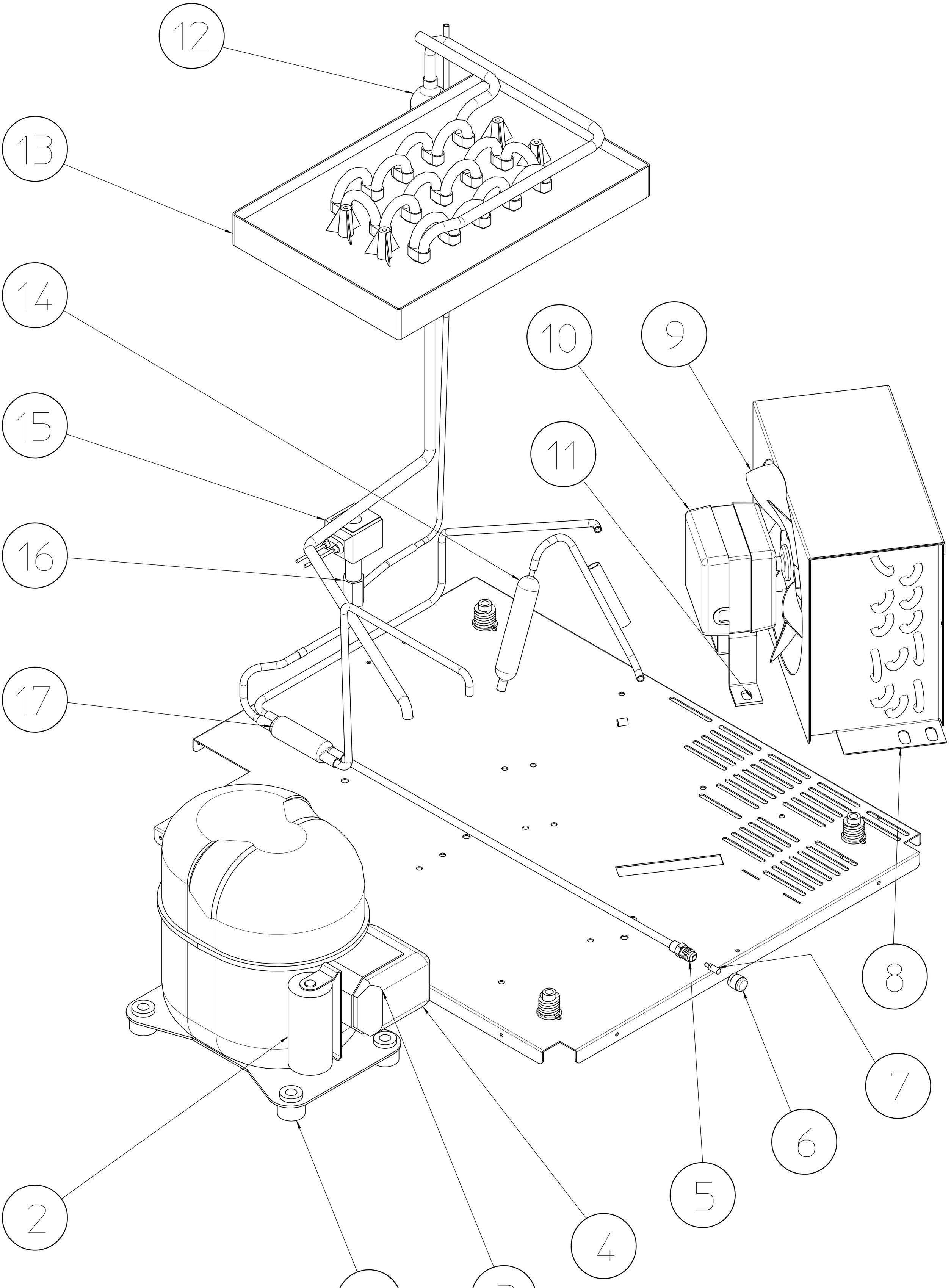
12
13
14
15
16
17
10
9
11
8
7
6
5
4
3
2
1

SDE 34 - SDE 40 - REFRIGERANT SYSTEM AIR COOLED - SISTEMA REFRIGERANTE RAFFR. AD ARIA
CIRCUIT FRIGORIFIQUE REFROID. PAR AIR - LUFTGEKÜHLT GEFRIERSYSTEM

ITEM NO POS. NO REP. NO REF. NO	PART NO CODICE REFERENCE STUECK NR	DESCRIPTION	DESCRIZIONE	DESIGNATION	BESCHREIBUNG
1	670105 03	COMPRESSOR	COMPRESSORE	COMPRESSEUR	KOMPRESSOR
2	EMB 2252347	START CAPACITOR	CONDENSATORE D'AVVIAMENTO	CAPACITE DE DEMARRAGE	START CONDENSATOR
3	EMB 2319069	PROTECTOR	PROTETTORE	PROTECTEUR	SCHUTZGERAT
4	EMB 2334116	RELAY	RELE'	RELAIS	RELAIS
5	650109 00	VALVE BODY	CORPO VALVOLA	CORPS DE VANNE	VENTILGEHAUSE
6	670012 00	VALVE PISTON	PISTONCINO VALVOLA	PISTON	VENTILKOLBEN
7	650106 00	VALVE CAP	CAPPUCCIO VALVOLA	CAPUCHON DE VANNE	VENTILKLAPPE
8	620285 00	AIR COOLED CONDENSER SDE 34	CONDENSATORE AD ARIA SDE 34	CONDENSEUR A AIR SDE 34	LUFT KONDENSATOR SDE 34
	620276 02	AIR COOLED CONDENSER SDE 40	CONDENSATORE AD ARIA SDE 40	CONDENSEUR A AIR SDE 40	LUFT KONDENSATOR SDE 40
9	620419 32	FAN BLADE	VENTOLA	HELICE	FLUGEL
10	620419 02	FAN MOTOR	MOTOVENTILATORE	MOTO-VENTILATEUR	LÜFTER GESAMTHEIT
11	620419 61	FAN MOTOR BRACKET	STAFFA VENTILATORE	SUPPORT MOTORVENTILATEUR	LÜFTER MOTOR TRAEGER
12	784444 09	ACCUMULATOR ASSY SDE 34	ASSIEME ACCUMULATORE SDE 34	ENS. ACCUMULATEUR SDE 34	SAMMLER UND SAUGLEITUNG. SDE 34
	784444 01	ACCUMULATOR ASSY SDE 40	ASSIEME ACCUMULATORE SDE 40	ENS. ACCUMULATEUR SDE 40	SAMMLER UND SAUGLEITUNG. SDE 40
13	784478 00R	EVAPORATOR SDE 34	EVAPORATORE SDE 34	EVAPORATEUR SDE 34	VERDAMPFER SDE 34
	784479 00R	EVAPORATOR SDE 40	EVAPORATORE SDE 40	EVAPORATEUR SDE 40	VERDAMPFER SDE 40
14	630003 05	DRIER	FILTRO DEUMIDIFICATORE	FILTRE DESHYDRATEUR	TROCKNER
15	620306 48	HOT GAS VALVE COIL	BOBINA VALVOLA GAS CALDO	BOBINE VANNE GAZ CHAUD	HEISSGAZ VENTIL SPULE
16	620306 14	HOT GAS VALVE BODY SDE 34	CORPO VALVOLA SDE 34	CORPS DE VANNE SDE 34	VENTILGEHAUSE SDE 34
	620306 22	HOT GAS VALVE BODY SDE 40	CORPO VALVOLA SDE 40	CORPS DE VANNE SDE 40	VENTILGEHAUSE SDE 40
17	630137 00	MECHANICAL FILTER	FILTRO MECCANICO	FILTRE MECANIQUE	MECHANISCHFILTERN

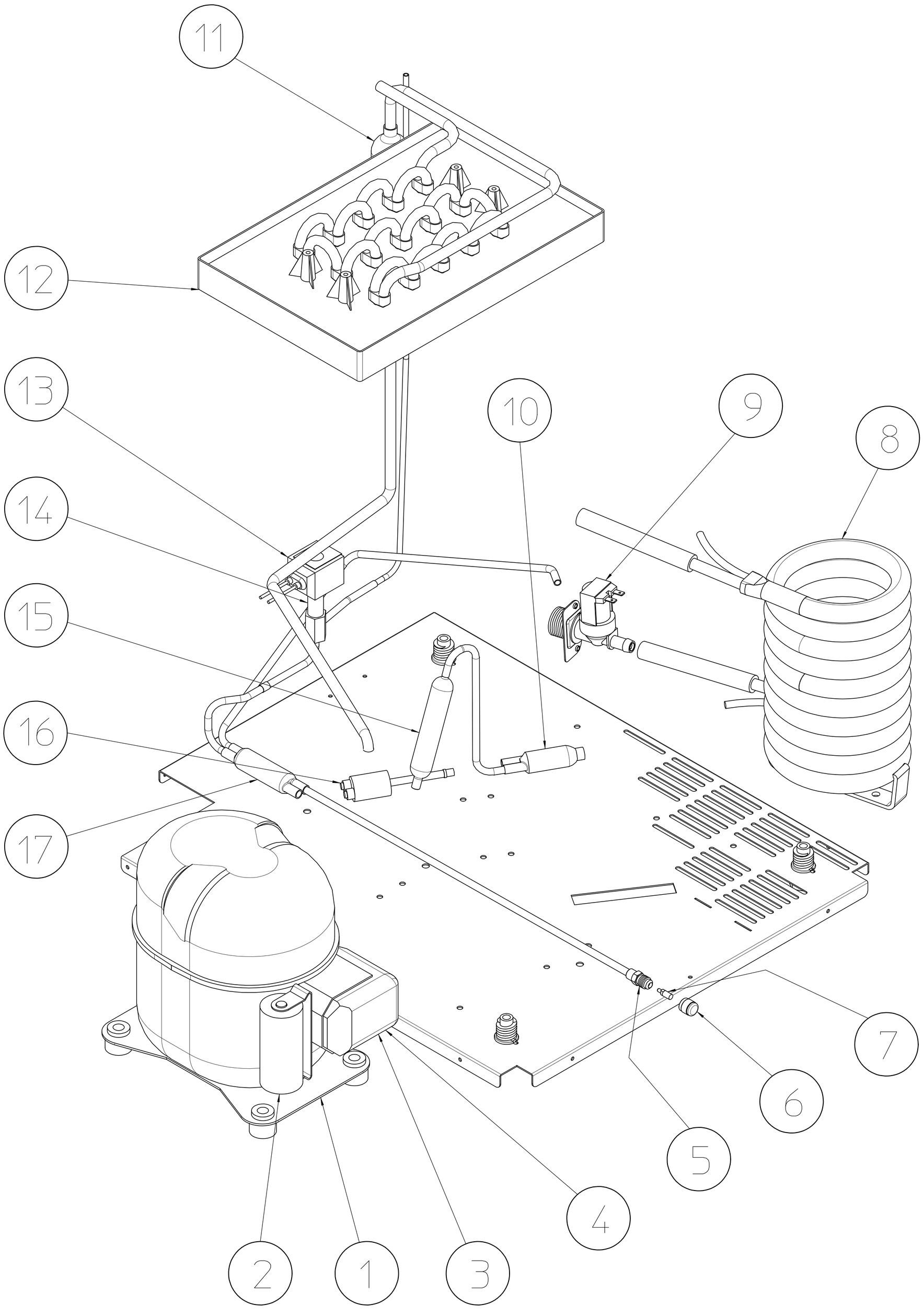
11
12
13
14
15
16
17
10
9
8
7
6
5
4
2
1
3

SDE 34 - SDE 40 - REFRIGERANT SYSTEM WATER COOLED - SISTEMA REFRIGERANTE RAFFR. AD ACQUA
CIRCUIT FRIGORIFIQUE REFROID. PAR EAU - WASSERGEKÜHLT GEFRIERSYSTEM

ITEM NO POS. NO REP. NO REF. NO	PART NO CODICE REFERENCE STUECK NR	DESCRIPTION	DESCRIZIONE	DESIGNATION	BESCHREIBUNG
1	670105 03	COMPRESSOR	COMPRESSORE	COMPRESSEUR	KOMPRESSOR
2	EMB 2252347	START CAPACITOR	CONDENSATORE D'AVVIAMENTO	CAPACITE DE DEMARRAGE	START CONDENSATOR
3	EMB 2319069	PROTECTOR	PROTETTORE	PROTECTEUR	SCHUTZGERAT
4	EMB 2334116	RELAY	RELE'	RELAIS	RELAIS
5	650109 00	VALVE BODY	CORPO VALVOLA	CORPS DE VANNE	VENTILGEHAUSE
6	670012 00	VALVE PISTON	PISTONCINO VALVOLA	PISTON	VENTILKOLBEN
7	650106 00	VALVE CAP	CAPPUCCIO VALVOLA	CAPUCHON DE VANNE	VENTILKLAPPE
8	620389 02	WATER COOLED CONDENSER	CONDENSATORE AD ACQUA	CONDENSEUR A EAU	WASSER KONDENSATOR
9	650105 70	WATER INLET VALVE	ELETTROVALVOLA	VANNE ARRIVÉE EAU	ELEKTROVENTIL
10	630020 01	MECHANICAL FILTER	FILTRO MECCANICO	FILTRE MECANIQUE	MECHANISCHFILTERN
11	784444 09	ACCUMULATOR ASSY SDE 34	ASSIEME ACCUMULATORE SDE 34	ENS. ACCUMULATEUR SDE 34	SAMMLER UND SAUGLEITUNG. SDE 34
	784444 01	ACCUMULATOR ASSY SDE 40	ASSIEME ACCUMULATORE SDE 40	ENS. ACCUMULATEUR SDE 40	SAMMLER UND SAUGLEITUNG. SDE 40
12	784478 00R	EVAPORATOR SDE 34	EVAPORATORE SDE 34	EVAPORATEUR SDE 34	VERDAMPFER SDE 34
	784479 00R	EVAPORATOR SDE 40	EVAPORATORE SDE 40	EVAPORATEUR SDE 40	VERDAMPFER SDE 40
13	620306 48	HOT GAS VALVE COIL	BOBINA VALVOLA GAS CALDO	BOBINE VANNE GAZ CHAUD	HEISSGAZ VENTIL SPULE
14	620306 14	HOT GAS VALVE BODY SDE 34	CORPO VALVOLA SDE 34	CORPS DE VANNE SDE 34	VENTILGEHAUSE SDE 34
	620306 22	HOT GAS VALVE BODY SDE 40	CORPO VALVOLA SDE 40	CORPS DE VANNE SDE 40	VENTILGEHAUSE SDE 40
15	630003 05	DRIER	FILTRO DEUMIDIFICATORE	FILTRE DESHYDRATEUR	TROCKNER
16	620499 01	PRESSURE CONTROL	PRESSOSTATO	PRESSOSTAT	PRESSOSTAT
17	630137 00	MECHANICAL FILTER	FILTRO MECCANICO	FILTRE MECANIQUE	MECHANISCHFILTERN

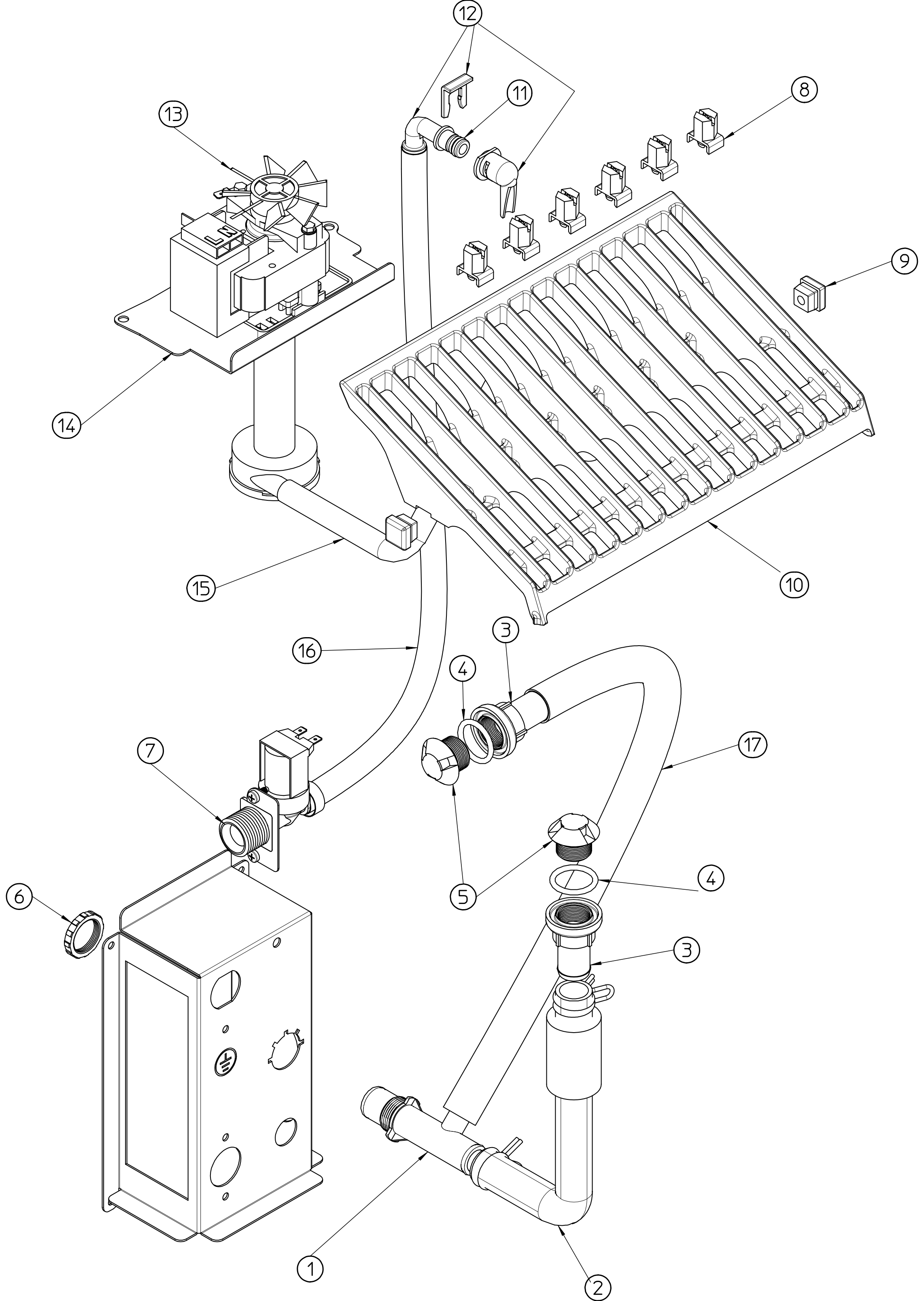
12
11
8
13
9
14
10
15
16
3
4
7
17
5
4
6
3
1
2

SDE 34 - SDE 40 -WATER SYSTEM - CIRCUITO IDRAULICO - CIRCUIT HYDRAULIQUE - WASSERSYSTEM-

ITEM NO POS. NO REP. NO REF. NO	PART NO CODICE REFERENCE STUECK NR	DESCRIPTION	DESCRIZIONE	DESIGNATION	BESCHREIBUNG
1	660224 00	WATER DRAIN FITTING	RACCORDO A "T"	RACCORD EVACUATION EAU	WASSERABFLUSSANSCHLUSSE
2	610148 09	STORAGE BIN DRAIN	TUBO SCARICO CONTENITORE	TUYAU VIDANGE CONTENEUR	BEHÄLTERAUSLAUFSCHLAUCH
3	660219 02	BIN DRAIN	RACCORDO DI SCARICO	RACCORD EVACUATION	ABFLUSSROHR
4	640134 00	O-RING	GUARNIZIONE	JOINT TORIQUE	SIMMER RING
5	660211 01	DRAIN FILTER	FILTRO SCARICO	FILTRE EVACUATION EAU	ABFLUSSFILTER
6	660535 00	PLASTIC RING NUT	GHIERA	COLLIER DE SERRAGE EN PLAST.	PLASTIKRING MUTTER
7	650105 66	WATER INLET VALVE - AIR COOL.	ELETTROVALVOLA INGR. ACQUA	ELECTROV. ARR. EAU - REFR. AIR	WASSEREINLAUFVENTIL - LUFT
	650105 70	WATER INL. VAL. - WATER COOL.	ELETTROVALVOLA INGR. ACQUA	ELECTROV. ARR. EAU - REFR. EAU	WASSEREINLAUFVENTIL - WASSER
8	660558 00	SPRAY JET	SPRUZZATORI	GICLEURS	SPRÜHDÜSEN
9	660557 00	SPRAY CUP	UGELLO SPRUZZATORE	BOUCHON POUR COLLECTEUR	STOPFEN
10	661029 02	SPRAY BAR & CHUTE SDE 34-40	ASS. PIASTRA SPRUZZ. SDE 34-40	ENS. RAMPE D'ARROS. SDE 34-40	SPRÜHSYSTEM SDE 34-40
11	640041 31	O-RING	GUARNIZIONE	JOINT TORIQUE	SIMMER RING
12	793172 00R	WATER INLET ELBOW ASSY	ASS. INGR. ACQUA A GOMITO	ENS. ENTREE EAU COUDEE	ABGEWINKEL ZULAUFROHR
13	620433 00	WATER PUMP	POMPA	POMPE A EAU	WASSER PUMPE
14	724332 00	METAL BRACKET	SUPPORTO POMPA	SUPPORT METALLIQUE	METALTRAEGER
15	610225 00	PUMP INLET WATER PIPE	TUBO MANDATA POMPA	TUYAU EVACUATION	ABFLUSSROHR
16	281900 01	PLASTIC TUBE - PER METER	TUBO INGRESSO ACQUA	TUYAU EN PLASTIQUE - POUR MT.	PLASTIK ROHR - PRO METER
17	610204 00	OVERFLOW DRAIN TUBE	TUBO SCARICO TROPPO PIENO	TUYAU VIDANGE TROP PLAIN	BEHÄLTER ABLAUF

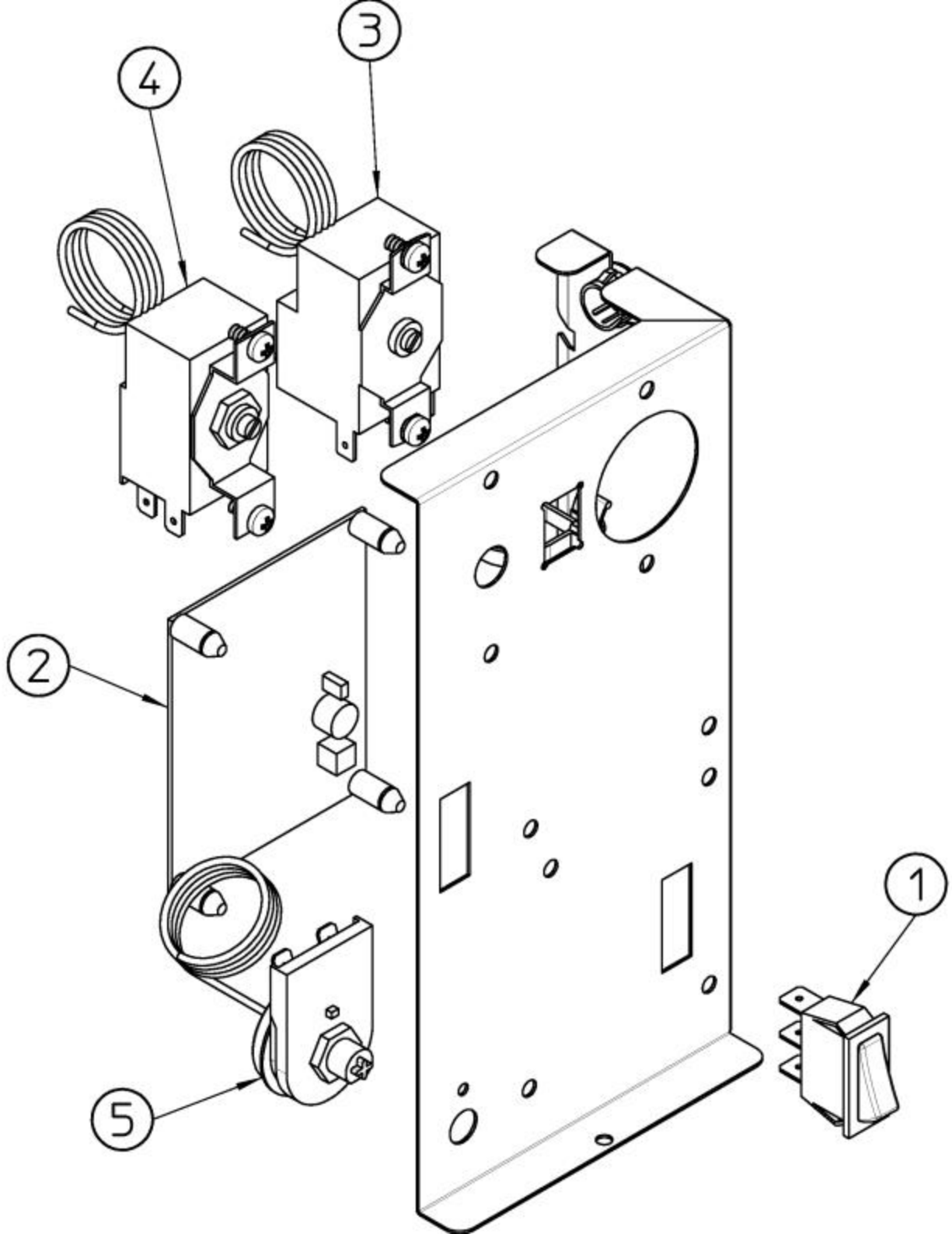
4
3
2
1
5

SDE 34 - SDE 40 - CONTROL BOX - SCATOLA DI CONTROLLO - BOITE ELECTRIQUE - SCHALTSCHRANK -

ITEM NO POS. NO REP. NO REF. NO	PART NO CODICE REFERENCE STUECK NR	DESCRIPTION	DESCRIZIONE	DESIGNATION	BESCHREIBUNG
1	620453 00	SWITCH	INTERRUTTORE LUMINOSO	INTERRUPTEUR LUMINEUX	SCHALTER
2	620507 00	ELECTRONIC TIMER	TIMER ELETTRONICO	MINUTERIE ELECTRONIQUE	ELEKTRONISCHER TIMER
3	630005 00	BIN THERMOSTAT	TERMOSTATO CONTENITORE	THERMOSTAT CONTENEUR	BEHÄLTER THERMOSTAT
4	620201 01	EVAPORATOR THERMOSTAT	TERMOSTATO EVAPORATORE	THERMOSTAT EVAPORATEUR	VERDAMPFERTHERMOSTAT
5	620443 02	THERMOSTAT - SAFETY	TERMOSTATO DI SICUREZZA	THERMOSTAT DE SECURITÉ	SICHERHEITS THERMOSTAT



Via Pascoli, 22 - 20010 Pogliano Milanese (Milano) Italy
Tel. +39 02 93900215 (Commerciale - Sales Dept.)
Tel. +39 02 93960357 (Assistenza - Service Dept.)
Fax +39 02 93900226 (Commerciale - Sales Dept.)
Fax +39 02 93960366 (Assistenza - Service Dept.)
E-mail: sales@simag.it • service@simag.it
www.simag.it