Mod./Type: **_90/... TPG...**

EXTREME

cod./num. 2531655.00

data/date: 15/05/2014

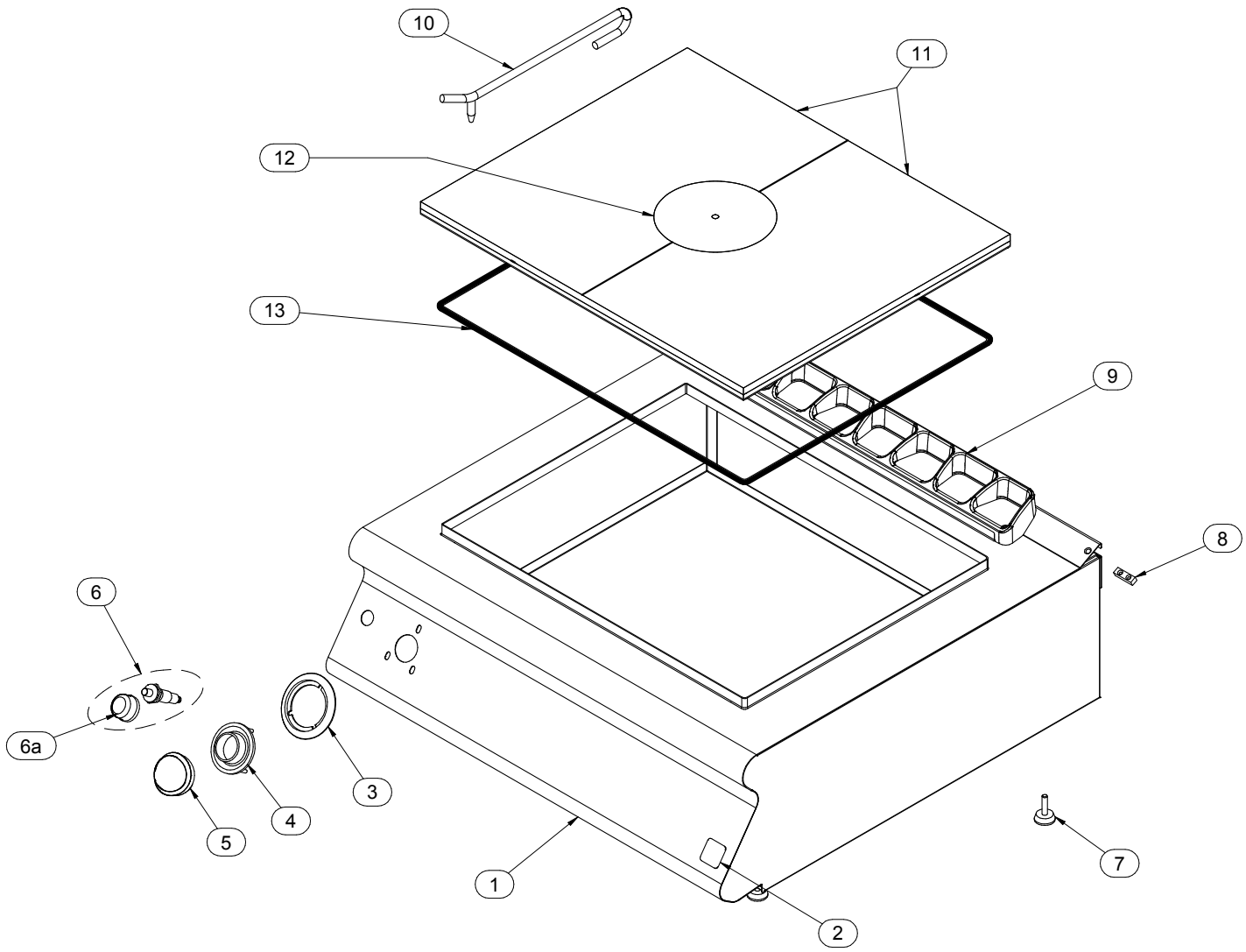

Mod./Type:	_70/80 TPG... - _70/... TP...G... - _90/... TP...G... EXTREME	cod./num.	2531657.00
		data/date:	20/05/2014

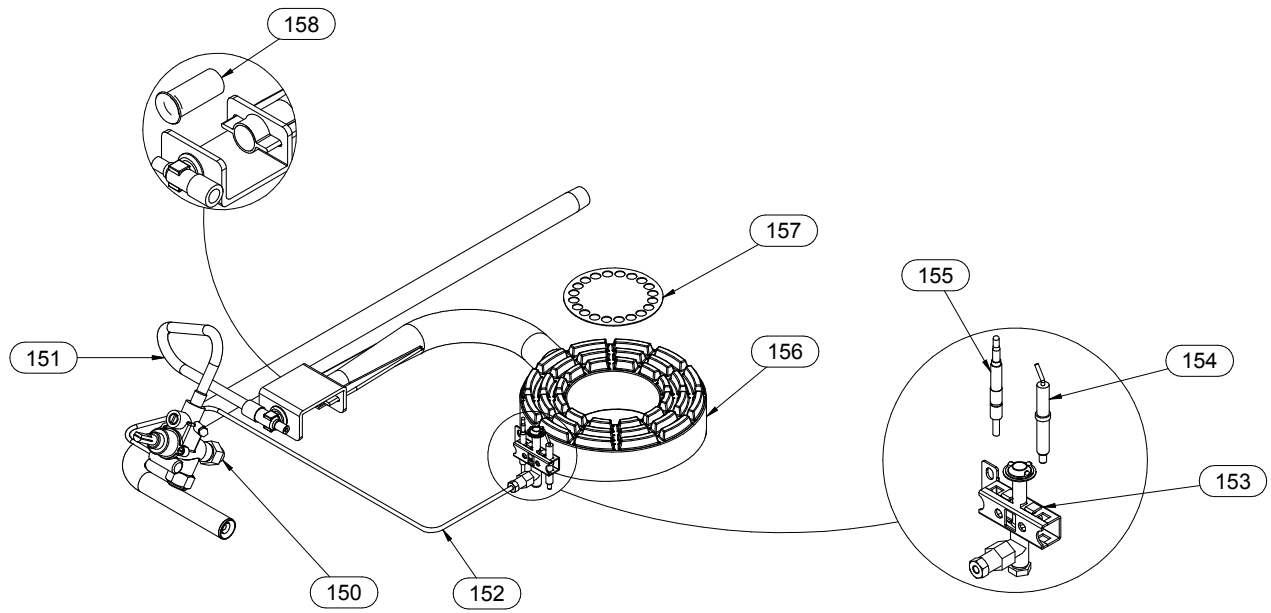

Mod./Type: **_70 - _90 .../40 ... - .../80 ... - .../120 ...**

VANO / CABINET - ...B - ...BE - ...BH2

cod./num. 2531578.00

data/date: 05/06/2014

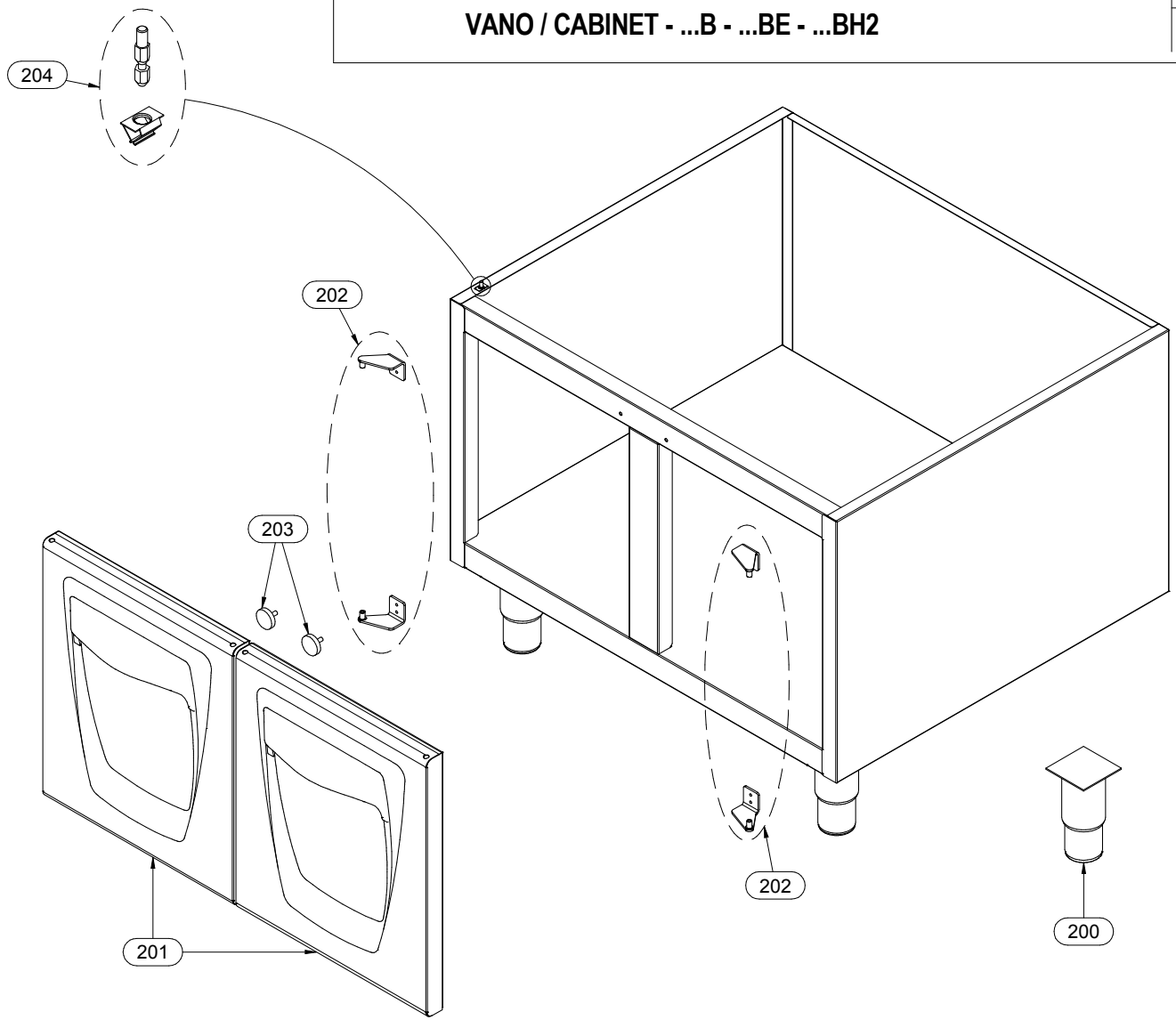

Mod.:	_90/...TPG... EXTREME			cod. / num. 2531656.00 data / date 15/05/2014 rif. / ref. 2531655.00		RICAMBI CONSIGLIATI - RECOMMENDED SPARE PARTS - PIECES DETACHEES RECOMMANDEES - EMPFOHLENEN ERSATZTEILE	EM90/80 TPG...	NOTE	
POS.	DESCRIZIONE	DESCRIPTION	DENOMINATION	BENENNUNG	COD.		Q.ty		
1	CRUSCOTTO	CONTROL PANEL	BANDEAU	BEDIENBLENDE	6111290.00		1		
2	MARCHIO	BRAND NAME	MARQUE	MARKENZEICHEN	982.021.00		1	FROM: 15.12.2011	TO: 31.01.2014
					982.023.00		1	FROM: 01.02.2014	TO:...
3	SERIGRAFIA	SCREEN PRINT	SÉRIGRAPHIE	SIEBDRUCK	910.163.00		1		
4	LABIRINTO	LABYRINTH	LABYRINTHE	LABYRINTH	256.235.00		1		
5	MANOPOLA	KNOB	BOUTON	DREHKNOPF	256.229.00	*	1		
6	ACCENDITORE PIEZO	PIEZO LIGHTER	ALLUMEUR PIEZO	PIEZOZÜNDER	912.091.00	*	1		
6a	CAPPUCCIO	CAP	CAPUCHON	KAPPE	951.047.00		1		
7	PIEDINO	FOOT	PIED	STELLFUSS	951.083.00		4	SOLO VERSIONE (-T)	ONLY (-T) VERSION
8	PIASTRINA GIUNZIONE	FIXING PLATE	PLAQUETTE FIXAGE	BEFESTIGUNGSPLATTE	941.130.00		1		
9	GRIGLIA CAMINO	FLUE GRIDDLE	GRILLE POUR CHEMINÉE	KAMINROST	982.013.00		1		
10	GANCIO	HOOK	CROC	HAKEN	683.028.00		1		
11	PIASTRA	SOLID TOP	PLAQUE COUP DE FEU	KOCHFELD	981.058.00		2		
12	ANELLO CENTRALE	CENTRAL RING	ANNEAU CENTRAL	MITTELRING	981.059.00		1		
13	GUARNIZIONE	WASHER	GUARNITURE	DICHTUNGSRING	953.004.00		3	U. M. metri	U. M. meters
14									
15									
16									
17									
18									
19									
20									
21									
22									
23									
24									
25									
26									
27									
28									
29									
30									
31									
32									
33									
34									
35									
36									
37									
38									
39									

Mod.:	_70/… TP...G... - _90/... TP...G… EXTREME			cod. / num. 2531658.00 data / date 12/06/2014 rif. / ref. 2531657.00		_70/80 TPG... - TP...G...	_70/120 TP...G...	_90/80 TPG... - TP...G...	_90/120 TP...G...	NOTE
POS.	DESCRIZIONE	DESCRIPTION	DENOMINATION	BENENNUNG	COD.	Q.ty				
150	RUBINETTO GAS	GAS TAP	ROBINET GAZ	GASHAHN	671.031.00	1	1	1	1	
151	TUBO GAS	GAS PIPE	TUYAU DE GAZ	GASLEITUNG	256.230.00	1	1			
					256.278.00			1	1	
152	TUBO GAS	GAS PIPE	TUYAU DE GAZ	GASLEITUNG	256.231.00	1	1			
					256.279.00			1	1	
153	GRUPPO PILOTA	PILOT GROUP	GROUPE VEILLEUSE	ZÜNDBRENNER GRUPPE	672.057.00	1	1	1	1	
154	CANDELA ACCENSIONE	IGNITION ELECTRODE	BOUGIE D'ALLUMAGE	KERZE SCHNELLBRENNER	672.060.00	1	1	1	1	
155	TERMOCOPPIA	THERMOCOUPLE	THERMOCOUPLE	THERMOELEMENT	672.025.00	1	1	1	1	
156	BRUCIATORE	BURNER	BRULEUR	BRENNER	672.056.00	1	1	1	1	
157	AERATORE	AERATOR	AÉRATEUR	LÜFTER	923.271.00	1	1	1	1	
158	BOCCOLA REGOLAZIONE ARIA	AIR REGULATION BUSHING	BAGUE DE RÉGULATION AIR	LUFTREGLERBÜCHSE	672.061.00	1	1	1	1	
159										
160										
161										
162										
163										
164										
165										
166										
167										
168										
169										
170										
171										
172										
173										
174										
175										
176										
177										
178										
179										
180										
181										
182										
183										

Mod.:	_70/... - _90/… VANO / CABINET …B - …BE - …BH2			cod. / num. 2531579.00 data / date 05/06/2014 rif. / ref. 2531578.00		RICAMBI CONSIGLIATI - RECOMMENDED SPARE PARTS - PIÈCES DÉTACHÉES RECOMMANDÉES - EMPFOHLENEN ERSATZTEILE	EM70/40 ...	EM70/80 ...	EM70/120 ...	EM90/40 ...	EM90/80 ...	EM90/120 ...	NOTE	
POS.	DESCRIZIONE	DESCRIPTION	DENOMINATION	BENENNUNG	COD.		Q. ty							
200	PIEDINO	FOOT	PIED	STELLFUSS	912.090.00		4	4	4	4	4	4	FROM: 15.12.2011	TO: 17.05.2013
					912.090.14		4	4	4	4	4	4	FROM: 18.05.2013	TO:...
201	PORTA	DOOR	PORTE	TÜR	256.215.00		1	2	3	1	2	3		
202	COPPIA CERNIERE	GASKETS PAIR	COUPLE CHARNIÈRES	SCHARNIERPAAR	256.216.00		1	2	3	1	2	3		
203	MAGNETE	MAGNET	MAGNÉTO	MAGNET	684.007.00		1	2	3	1	2	3	FROM: 15.12.2011	TO: 01.01.2014
					984.006.00		1	2	3	1	2	3	FROM: 02.01.2014	TO:...
204	FISSAGGIO	FIXING	FIXAGE	BEFESTIGUNG	256.431.00		4	4	4	4	4	4	FROM: 04.05.2015	TO:...
205														
206														
207														
208														
209														
210														
211														
212														
213														
214														
215														
216														
217														
218														
219														
220														
221														
222														
223														
224														
225														
226														
227														
228														
229														
230														
231														
232														
233														
234														