SIMAG
ICE MACHINES

Ice Storage Bins
and
Transport System

Storage Ice System

RC 200
RC 300
RC 600

Catalogo Ricambi
Spare Parts List
Catalogue Pièces Détachées
Ersatzteilenkatalog

PAGE PAGINA PAGE SEITE	TABLE OF CONTENTS	INDICE	TABLE DES MATIÉRES	INHALTVERZEICHNIS
2/3	RC 200 - CART	RC 200 - CARRELLO	RC 200 - CHARIOT	RC 200 - KARRE
4/5	RC 200 - STORAGE BIN	RC 200 - CONTENITORE	RC 200 - CABINE DE STOCKAGE	RC 200 - SPEICHER
6/7	RC 300 - CART	RC 300 - CARRELLO	RC 300 - CHARIOT	RC 300 - KARRER
8/9	RC 300 - STORAGE BIN	RC 300 - CONTENITORE	RC 300 - CABINE DE STOCKAGE	RC 300 - SPEICHER
10/11	RC 600 - CART	RC 600 - CARRELLO	RC 600 - CHARIOT	RC 600 - KARRER
12/13	RC 600 - STORAGE BIN	RC 600 - CONTENITORE	RC 600 - CABINE DE STOCKAGE	RC 600 - SPEICHER

RC 200 - Cart/Carrello/Chariot/Karre -

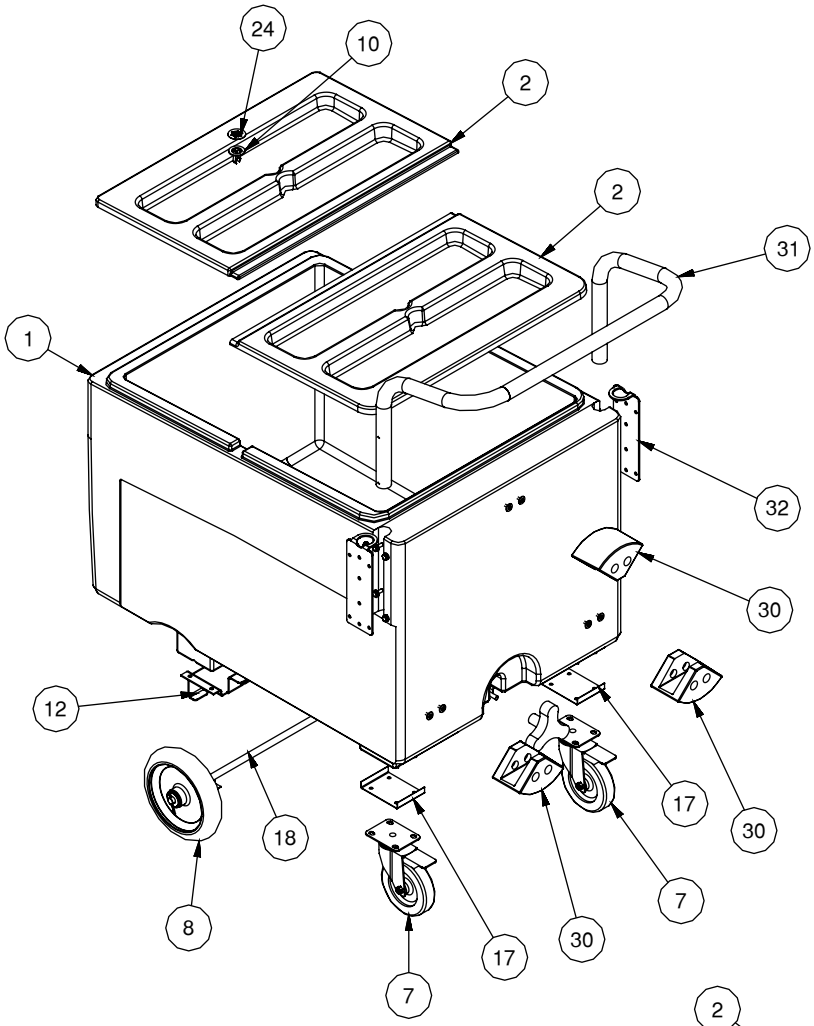

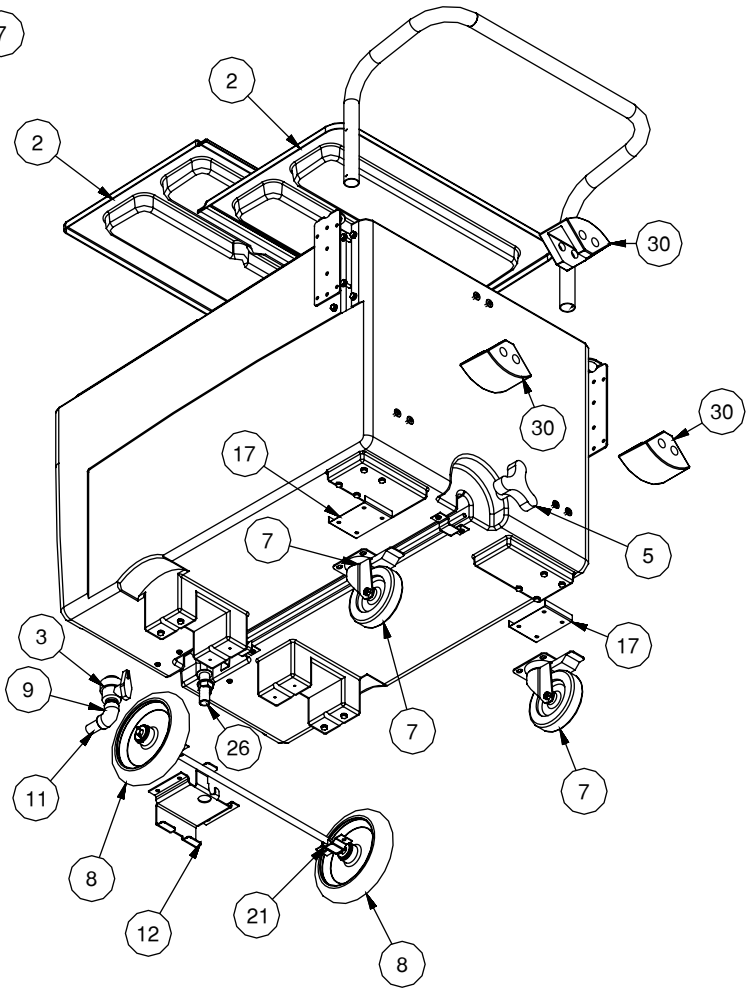

PROPERTY

RC 200 -Cart/Carrello/Chariot/Karre-

ITEM NO POS. NO REP. NO REF. NO	PART NO CODICE REFERENCE STUECK NR	DESCRIPTION	DESCRIZIONE	DESIGNATION	BESCHREIBUNG
3	CM 25702611	WATER DRAIN VALVE	VALVOLA DI SCARICO	VANNE VIDANGE EAU	WASSERABFLUSSVENTIL
5	CM 25702601	HANDLE	VOLANTINO	VOLANT DE COMMANDE	HANDRAD
7	CM 19651037	WHEEL	RUOTA GIREVOLE	ROULETTE	RAD
8	CM 19651038	WHEEL	RUOTA FISSA	ROULETTE	RAD
9	CM 19470101	PVC FITTING	RACCORDO PVC	RACCORD EN PVC	PVC-BEFESTIGUNG
11	CM 25702612	DRAIN TUBE	TUBO SCARICO	TUYAU SORTIE EAU	ABFLUSSRHOR
18	CM 25702619	WHEEL SHAFT	ASSE RUOTE	AXE DE ROULETTE	RAD-WELLE
26	CM 26103880	DRAIN FITTING	RACCORDO SCARICO	RACCORD SORTIE EAU	ABLASSSTUTZEN
30	CM 25702626	COVER HOLDER	BLOCCHETTO PORTA COPERCHIO	SUPPORT DE COUVERCLE	ABDECKUNGS-HALTER
31	CM 81460536	HANDLE ASSY	ASS. MANIGLIA	ENSEMBLE POIGNÉE	HANDGRIFF-VERSAMMLUNG

RC 200 -Storage Bin/Contenitore/Cabine de Stockage/Speicher-

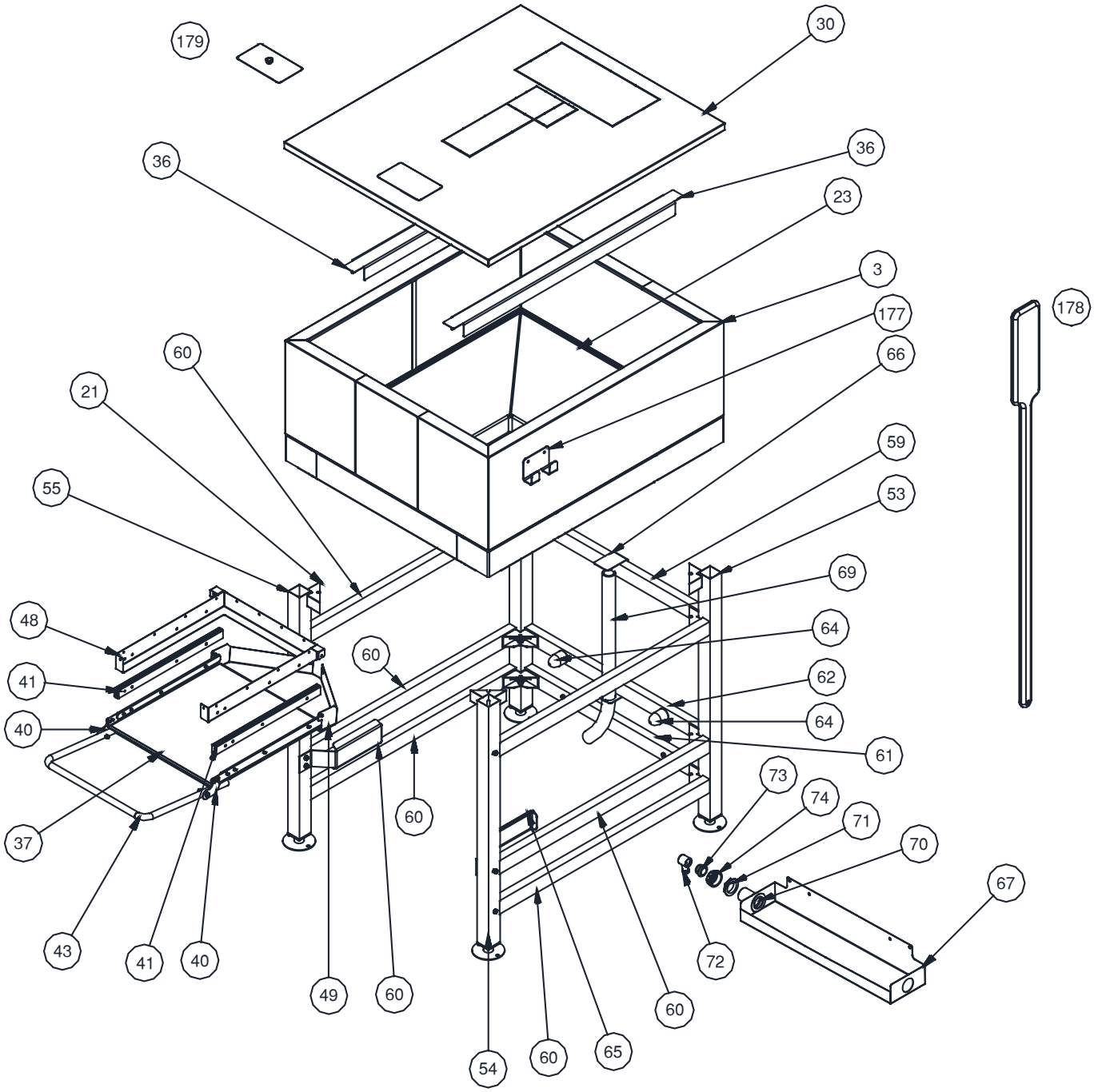

PROPERTY

RC 200 -Storage Bin/Contenitore/Cabine de Stockage/Speicher-

ITEM NO POS. NO REP. NO REF. NO	PART NO CODICE REFERENCE STUECK NR	DESCRIPTION	DESCRIZIONE	DESIGNATION	BESCHREIBUNG
3	CM 81460434	INSULATED STORAGE BIN	CONTENITORE	CABINE DE STOCKAGE ISOLÉE	ISOLIERBEHÄLTER
30	CM 25702707	S.S. TOP COVER	COPERCHIO INOX	COUVERCLE INOX	EDELSTAHL-OBERE ABDECKUNG
36	CM 25702681	STIFFENER	SUPPORTO INOX	SUPPORT INOX	VERSTEIFUNG
37	CM 25702698	ICE DRAWER	SARACINESCA	TIROIR DE GLACE	EIS-FACH
40	CM 25702697	DRAWER BRACKET	SUPPORTO SARACINESCA	SUPPORT DU TIROIR	FACH-HALTEWINKEL
41	CM 25702696	DRAWER GUIDE	GUIDA SARACINESCA	GUIDE DE TIROIR	FACH-FÜHRER
43	CM 25702699	ICE DRAWER PULL	MANIGLIA SARACINESCA	POIGNÉE DU TIROIR	EIS-FACH-ZUG
48	CM 25702688	GUIDE BRACKET FRAME	CORNICE SUPPORTO GUIDE	ENCADREMENT SUPPORT GLISSIERE	FÜHRUNGSBÜGEL-RAHMEN
49	CM 25702687	WATER DRIP TRAY	VASSOIO RACCOLTA ACQUA	GOUPELLE EAU	WASSER-TROPFENFÄNG.-BEHÄLTER
53	CM 81460415-X13	VERTICAL ROD - BACK	TUBOL. INOX VERTICALE - POSTER.	TIGE VERTICALE - ARRIERE	VERTIKALE STANGE - RÜCKSEITIG
54	CM 81460415-X02	VERTICAL ROD - FRONT RIGHT	TUBOL. INOX VERTICALE-FRONT. DX	TIGE VERTICALE - DROITE AVANT	VERTIK. STANGE-VORDERES RECHT
55	CM 81460415-X15	VERTICAL ROD - FRONT LEFT	TUBOL. INOX VERTICALE-FRONT. SX	TIGE VERTICALE - GAUCHE AVANT	VERTIK. STANGE - VORDERES LINKS
59	CM 81460415-X08	HORIZONTAL ROD - BACK UPPER	TUBOL. INOX ORIZZ. - POST. SUPER.	TIGE HORIZONTALE - ARRIERE SUP.	HORIZ. ST.-RÜCKSEITIGES OBERL.
60	CM 81460415-X12	HORIZONTAL ROD - SIDE	TUBOLARE INOX ORIZZ. - LATERALE	TIGE HORIZONTALE - CÔTÉ	HORIZONTALE STANGE - SEITE
61	CM 81460415-X06	HORIZONTAL ROD - BACK LOWER	TUBOL. INOX ORIZZ. - POST. INFER.	TIGE HORIZONTALE - ARRIERE INF.	HORIZ. ST.-RÜCKSEITIGES NIEDRIG.
62	CM 81460415-X16	HORIZONTAL ROD - BACK CENTER	TUBOL. INOX ORIZZ. - POST. CENTR	TIGE HORIZONTALE-ARRIERE CENTR	HORIZ. STANGE-RÜCKSEITIGE MITTE
64	CM 25702703	BUMBER	PARACOLPI	PARECOUPS	BUMBER
65	CM 25702706	CART GUIDE	GUIDA CARRELLO	GUIDE DU CHARIOT	KARREN-FÜHRER
66	CM 25702691	METAL BRACKET	SUPPORTO INOX	SUPPORT INOX	ABLASSSCHLAUCH-HALTER
67	CM 25704038	S.S. WATER TRAY	RACCOGLIGOCCIE	GOUPELLE	EDELSTHAL-WASSER-BEHÄLTER
69	CM 25704029	DRAIN HOSE	TUBO SCARICO	TUYAU EN PLASTIQUE	ABLASSSCHLAUCH
70	CM 19500107	DRAIN FITTING	PILETTA SCARICO	RACCORD EVACUATION EAU	ABLASSSTUTZEN
71	CM 19500108	NUT	GHIERA	ECRU	MUTTER
72	CM 19500109	ELBOW	GOMITO	COUDE	ABLASSSTUTZEN
73	CM 19500110	PLASTIC FITTING 1" 1/4	RACCORDO 1" 1/4	RACCORD PLASTIQUE 1" 1/4	PLASTIKBEFESTIGUNG 1" 1/4
74	CM 19500111	HOSE BARB	GHIERA PORTAGOMMA	RACCORD TUYAU	VERBINDUNG ROHR
177	CM 25702710	ICE BLADE BRACKET	SUPPORTO PALA GHIACCIO	SUPPORT PALE DE GLACE	EIS-BLATT-HALTEWINKEL
178	CM 25702711	ICE BLADE	PALA GHIACCIO	PALE DE GLACE	EIS-BLATT
179	CM 81460450	PLASTIC PLUG	TAPPO IN PLASTICA	CAPOUCHON EN PLASTIQUE	PLASTIKSTECKER

RC 300 - Cart/Carrello/Chariot/Karre -

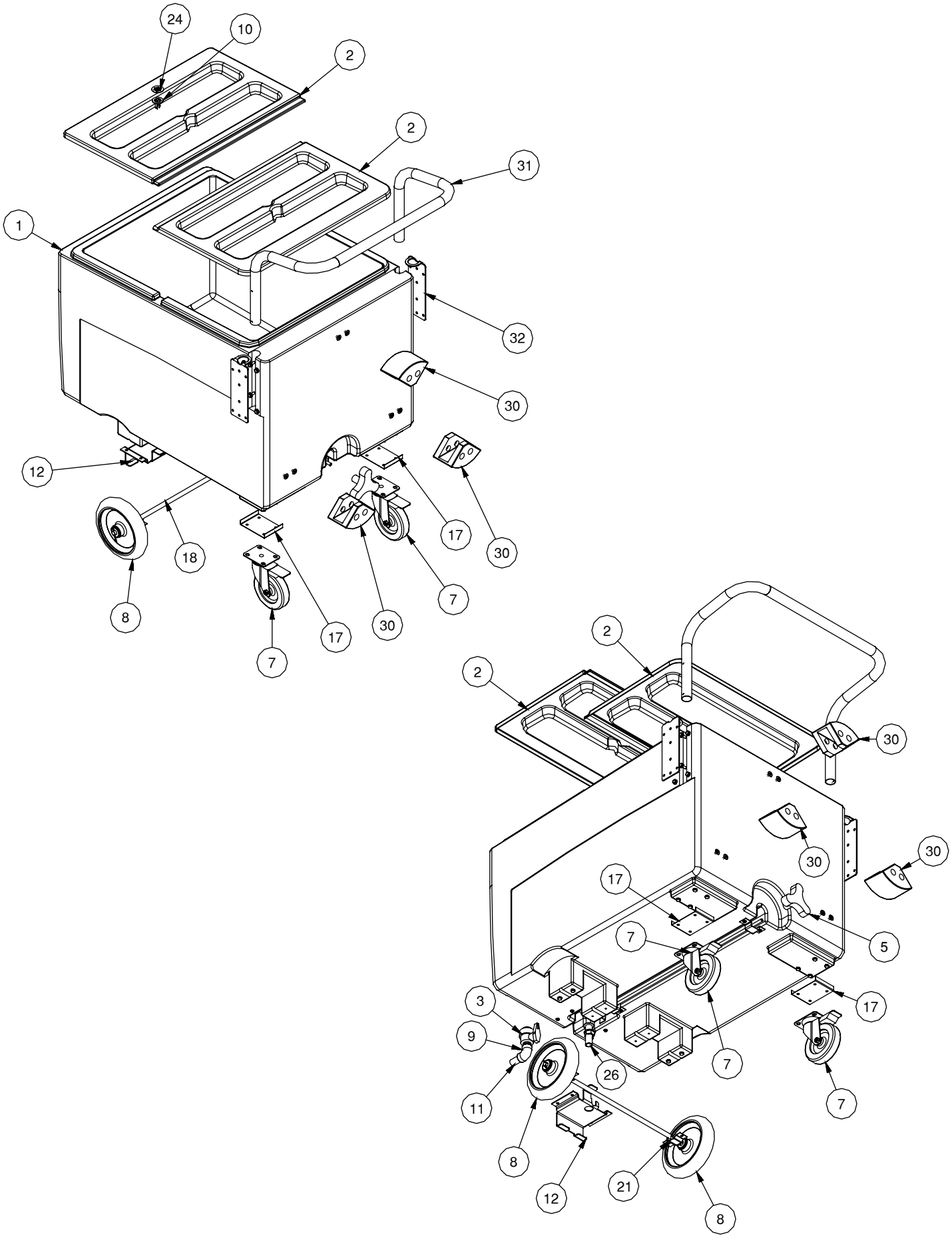

PROPERTY

RC 300 -Cart/Carrello/Chariot/Karre-

ITEM NO POS. NO REP. NO REF. NO	PART NO CODICE REFERENCE STUECK NR	DESCRIPTION	DESCRIZIONE	DESIGNATION	BESCHREIBUNG
3	CM 25702611	WATER DRAIN VALVE	VALVOLA DI SCARICO	VANNE VIDANGE EAU	WASSERABFLUSSVENTIL
5	CM 25702601	HANDLE	VOLANTINO	VOLANT DE COMMANDE	HANDRAD
7	CM 19651037	WHEEL	RUOTA GIREVOLE	ROULETTE	RAD
8	CM 19651038	WHEEL	RUOTA FISSA	ROULETTE	RAD
9	CM 19470101	PVC FITTING	RACCORDO PVC	RACCORD EN PVC	PVC-BEFESTIGUNG
11	CM 25702612	DRAIN TUBE	TUBO SCARICO	TUYAU SORTIE EAU	ABFLUSSRHOR
18	CM 25702619	WHEEL SHAFT	ASSE RUOTE	AXE DE ROULETTE	RAD-WELLE
26	CM 26103880	DRAIN FITTING	RACCORDO SCARICO	RACCORD SORTIE EAU	ABLASSSTUTZEN
30	CM 25702626	COVER HOLDER	BLOCCHETTO PORTA COPERCHIO	SUPPORT DE COUVERCLE	ABDECKUNGS-HALTER
31	CM 81460536	HANDLE ASSY	ASS. MANIGLIA	ENSEMBLE POIGNÉE	HANDGRIFF-VERSAMMLUNG

RC 300 -Storage Bin/Contenitore/Cabine de Stockage/Speicher-

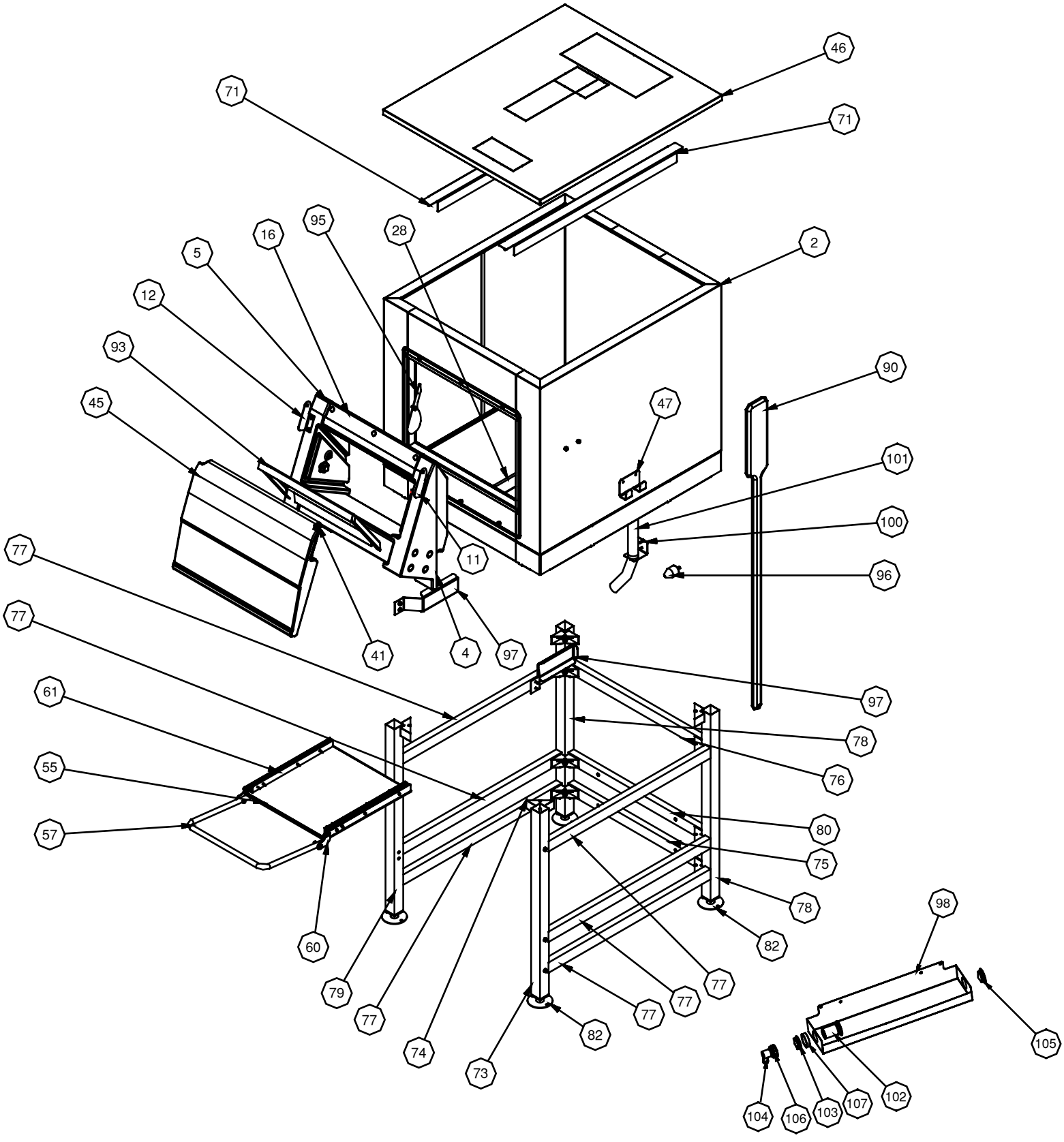

PROPERTY SIMAG ICE MACHINES

RC 300 -Storage Bin/Contenitore/Cabine de Stockage/Speicher-

ITEM NO POS. NO REP. NO REF. NO	PART NO CODICE REFERENCE STUECK NR	DESCRIPTION	DESCRIZIONE	DESIGNATION	BESCHREIBUNG
2	CM 81460432	INS. STORAGE BIN	ASS. CONTENITORE ISOLATO	BAC DE STOCKAGE ISOLÉ	ISOLIERTER EISBEHÄLTER
4	CM 25702729	RIGHT SIDE DOOR FRAME	TELAIO SPORTELLO DX	ENCADREMENT PORTE DROITE	RECHTE SEITEN-TÜRRAHMEN
5	CM 25702728	LEFT SIDE DOOR FRAME	TELAIO SPORTELLO SX	ENCADREMENT PORTE GAUCHE	LINKE SEITEN-TÜRRAHMEN
11	CM 25702722	RIGHT HINGE BRACKET	SUPPORTO CERNIERA DX	SUPPORT CERNIERE DROITE	RECHTER SCHARNIER-HALTEWINK.
12	CM 25702723	LEFT HINGE BRACKET	SUPPORTO CERNIERA SX	SUPPORT CERNIERE GAUCHE	LINKER SCHARNIER-HALTEWINKEL
16	CM 25702814	UPPER DOOR METAL FRAME	CORNICE SUPERIORE INOX	ENCADRFEMENT PORT - SUP.	OBERER TÜR-METALRAHMEN
41	CM 25702667	HINGE	CERNIERA	CERNIERE	SCHARNIER
45	CM 25702658	PLASTIC BIN DOOR	SPORTELLO IN PLASTICA	PORTE EN PLASTIQUE	BEHÄLTERTÜR
46	CM 25702707	S.S. TOP COVER	COPERCHIO INOX	COUVERCLE INOX	EDELSTAHL-OBERE ABDECKUNG
47	CM 25702710	ICE BLADE BRACKET	SUPPORTO PALA GHIACCIO	SUPPORT PALE DE GLACE	EIS-BLATT-HALTEWINKEL
55	CM 25702698	ICE DRAWER	SARACINESCA	TIROIR DE GLACE	EIS-FACH
57	CM 25702699	ICE DRAWER PULL	MANIGLIA SARACINESCA	POIGNÉE DU TIROIR	EIS-FACH-ZUG
60	CM 25702697	DRAWER BRACKET	SUPPORTO SARACINESCA	SUPPORT DU TIROIR	FACH-HALTEWINKEL
61	CM 25702696	DRAWER GUIDE	GUIDA SARACINESCA	GUIDE DE TIROIR	FACH-FÜHRER
71	CM 25702681	STIFFENER	SUPPORTO INOX	SUPPORT INOX	VERSTEIFUNG
73	CM 81460415-X02	VERTICAL ROD - FRONT RIGHT	TUBOL. INOX VERTIC. - FRONT. DX	TIGE VERTICALE - DROITE AVANT	VERTIK. STANGE - VORDER. RECHT
74	CM 81460415-X00	CORNER HOLDER	BLOCCO D'ANGOLO	SUPPORT D'ANGLE	ECKHALTER
75	CM 81460415-X06	HORIZONTAL ROD - BACK LOWER	TUBOLARE INOX ORIZZ. - POST. INF.	TIGE HORIZONTALE - ARRIERE INF.	HORIZ. STANGE-RÜCKSEIT. NIEDRIG.
76	CM 81460415-X08	HORIZONTAL ROD - BACK UPPER	TUBOL. INOX ORIZZ. - POST. SUP.	TIGE HORIZONTALE - ARRIERE SUP.	HORIZ. STANGE-RÜCKSEIT. OBERL.
77	CM 81460415-X12	HORIZONTAL ROD - SIDE	TUBOLARE INOX ORIZZ. - LATERALE	TIGE HORIZONTALE - CÔTÉ	HORIZONTALE STANGE - SEITE
78	CM 81460415-X13	VERTICAL ROD - BACK	TUBOLARE INOX VERTICALE - POST.	TIGE VERTICALE - ARRIERE	VERTIKALE STANGE - RÜCKSEITIG
79	CM 81460415-X15	VERTICAL ROD - FRONT LEFT	TUBOL. INOX VERTIC. - FRONT. SX	TIGE VERTICALE - GAUCHE AVANT	VERTIK. STANGE - VORDERES LINKS
80	CM 81460415-X16	HORIZONTAL ROD - BACK CENTER	TUBOL. INOX ORIZZ. - POST. CENTR.	TIGE HORIZ. - ARRIERE CENTR.	HORIZ. STANGE - RÜCKSEIT. MITTE
82	CM 81460415-X18	LEVELLER	PIEDINO	PIED	FUSS
90	CM 25702711	ICE BLADE	PALA GHIACCIO	PALE DE GLACE	EIS-BLATT
93	CM 25702679	S.S. DEFLECTOR	DEFLETTORE INOX	DEFLECTEUR INOX	EDELSTAHL-UMLENKBLECH
95	CM 25702725	DEFLECTOR HOLDER	BLOCCA DEFLETTORE	SUPPORT DE DÉFLECTEUR	UMLENKBLECH-HALTER
96	CM 25702703	BUMBER	PARACOLPI	PARECOUPS	BUMBER
97	CM 25702706	CART GUIDE	GUIDA CARRELLO	GUIDE DU CHARIOT	KARREN-FÜHRER
98	CM 25704038	S.S. WATER TRAY	RACCOGLIGOCCE	GOUPELLE	EDELSTHAL-WASSER-BEHÄLTER
100	CM 25704028	DRAIN HOSE HOLDER	SUPPORTO TUBO SCARICO	SUPPORT TUYAU	ABLASSSCHLAUCH-HALTER
101	CM 25704029	DRAIN HOSE	TUBO SCARICO	TUYAU EN PLASTIQUE	ABLASSSCHLAUCH
102	CM 19500107	DRAIN FITTING	PILETTA SCARICO	RACCORD EVACUATION EAU	ABLASSSTUTZEN
103	CM 19500108	NUT	GHIERA	ECRU	MUTTER
104	CM 19500109	ELBOW	GOMITO	COUDE	ABLASSSTUTZEN
105	CM 19690427	PLUG	TAPPO	CAPUCHON	KAPPE
106	CM 19500111	HOSE BARB	GHIERA PORTAGOMMA	RACCORD TUYAU	VERBINDUNG ROHR
107	CM 25704039	SPACER	DISTANZIALE	ENTRETOISE	DISTANZSCHEIBE

RC 600 - Cart/Carrello/Chariot/Karre -

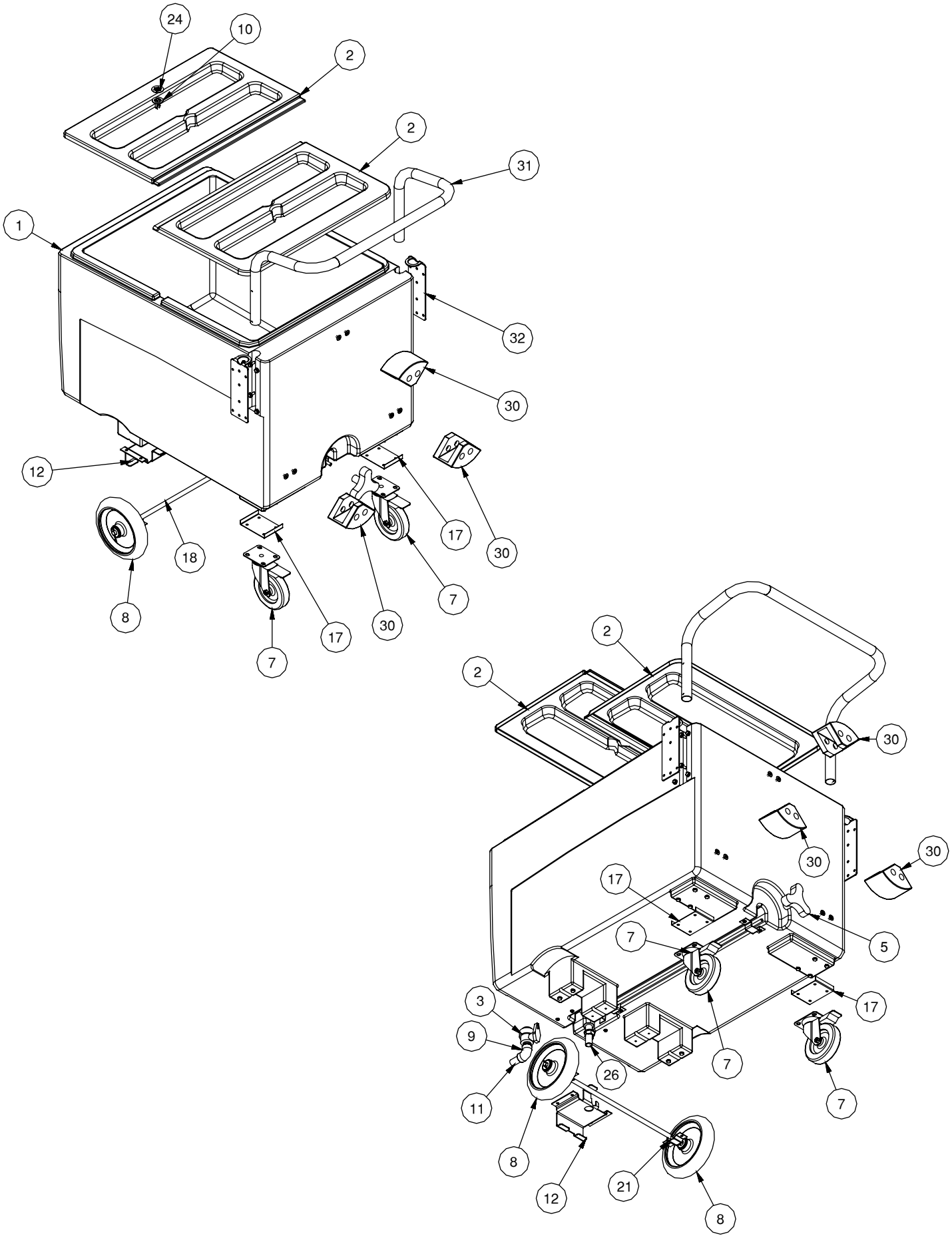

PROPERTY

RC 600 -Cart/Carrello/Chariot/Karre-

ITEM NO POS. NO REP. NO REF. NO	PART NO CODICE REFERENCE STUECK NR	DESCRIPTION	DESCRIZIONE	DESIGNATION	BESCHREIBUNG
3	CM 25702611	WATER DRAIN VALVE	VALVOLA DI SCARICO	VANNE VIDANGE EAU	WASSERABFLUSSVENTIL
5	CM 25702601	HANDLE	VOLANTINO	VOLANT DE COMMANDE	HANDRAD
7	CM 19651037	WHEEL	RUOTA GIREVOLE	ROULETTE	RAD
8	CM 19651038	WHEEL	RUOTA FISSA	ROULETTE	RAD
9	CM 19470101	PVC FITTING	RACCORDO PVC	RACCORD EN PVC	PVC-BEFESTIGUNG
11	CM 25702612	DRAIN TUBE	TUBO SCARICO	TUYAU SORTIE EAU	ABFLUSSRHOR
18	CM 25702619	WHEEL SHAFT	ASSE RUOTE	AXE DE ROULETTE	RAD-WELLE
26	CM 26103880	DRAIN FITTING	RACCORDO SCARICO	RACCORD SORTIE EAU	ABLASSSTUTZEN
30	CM 25702626	COVER HOLDER	BLOCCHETTO PORTA COPERCHIO	SUPPORT DE COUVERCLE	ABDECKUNGS-HALTER
31	CM 81460536	HANDLE ASSY	ASS. MANIGLIA	ENSEMBLE POIGNÉE	HANDGRIFF-VERSAMMLUNG

RC 600 -Storage Bin/Contenitore/Cabine de Stockage/Speicher-

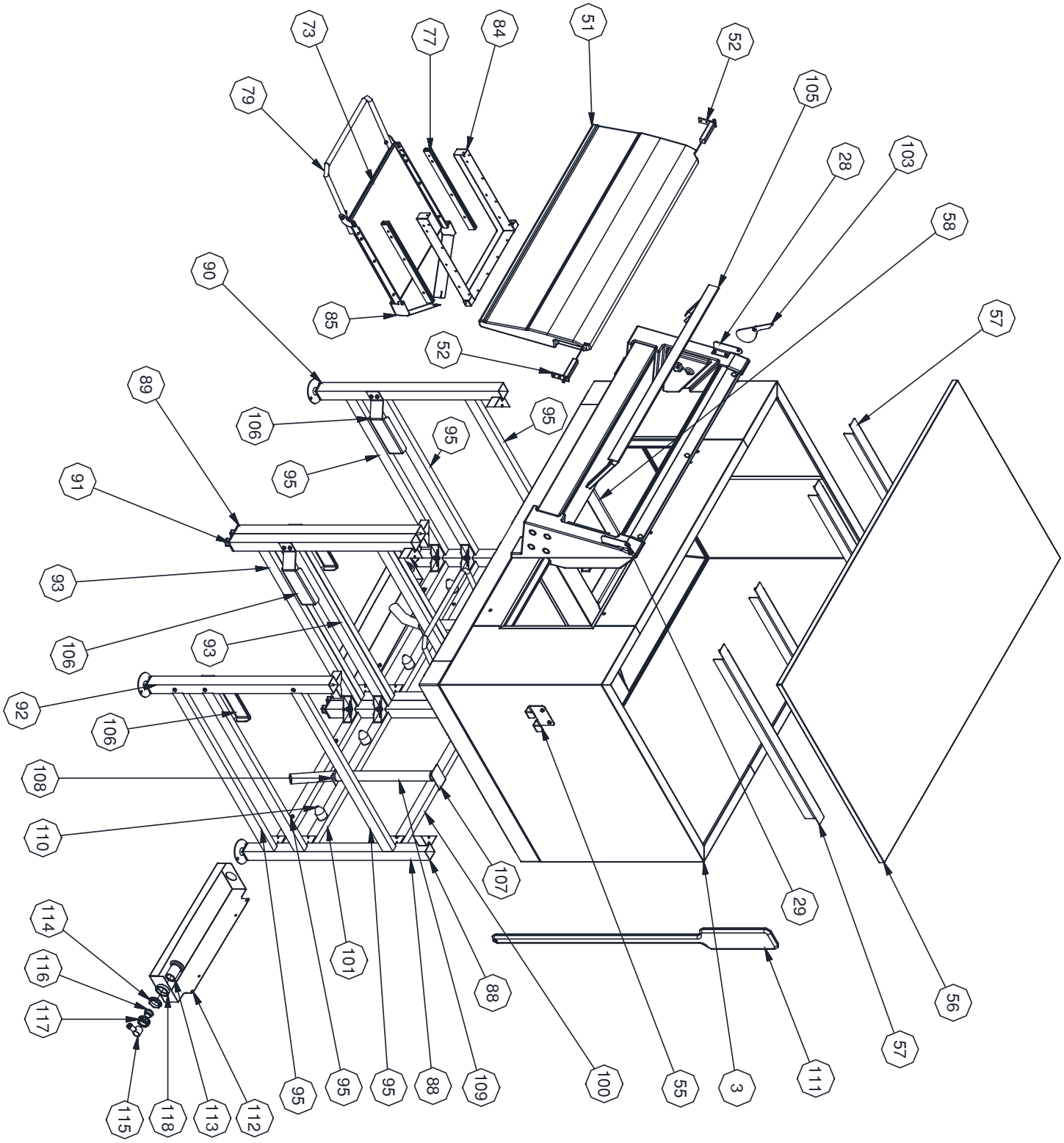

PROPERTY

RC 600 -Storage Bin/Contenitore/Cabine de tockage/Speicher-

ITEM NO POS. NO REP. NO REF. NO	PART NO CODICE REFERENCE STUECK NR	DESCRIPTION	DESCRIZIONE	DESIGNATION	BESCHREIBUNG
3	CM 81460433	INS. STORAGE BIN	ASS. CONTENITORE ISOLATO	BAC DE STOCKAGE ISOLÉ	ISOLIERTER EISBEHÄLTER
28	CM 25702723	LEFT HINGE BRACKET	SUPPORTO CERNIERA SX	SUPPORT CERNIERE GAUCHE	LINKER SCHARNIER-HALTEWINKEL
29	CM 25702722	RIGHT HINGE BRACKET	SUPPORTO CERNIERA DX	SUPPORT CERNIERE DROITE	RECHTER SCHARNIER-HALTEWINK.
51	CM 25702668	PLASTIC BIN DOOR	SPORTELLO IN PLASTICA	PORTE EN PLASTIQUE	BEHÄLTERTÜR
52	CM 25702667	HINGE	CERNIERA	CERNIERE	SCHARNIER
55	CM 25702710	ICE BLADE BRACKET	SUPPORTO PALA GHIACCIO	SUPPORT PALE DE GLACE	EIS-BLATT-HALTEWINKEL
56	CM 25702708	S.S. TOP COVER	COPERCHIO INOX	COUVERCLE INOX	EDELSTAHL-OBERE ABDECKUNG
57	CM 25702681	STIFFENER	SUPPORTO INOX	SUPPORT INOX	VERSTEIFUNG
73	CM 25702698	ICE DRAWER	SARACINESCA	TIROIR DE GLACE	EIS-FACH
77	CM 25702696	DRAWER GUIDE	GUIDA SARACINESCA	GUIDE DE TIROIR	FACH-FÜHRER
79	CM 25702699	ICE DRAWER PULL	MANIGLIA SARACINESCA	POIGNÉE DU TIROIR	EIS-FACH-ZUG
84	CM 25702688	GUIDE BRACKET FRAME	CORNICE SUPPORTO GUIDE	ENCADREMENT SUPPORT GLISSIERE	FÜHRUNGSBÜGEL-RAHMEN
85	CM 25702687	WATER DRIP TRAY	VASSOIO RACCOLTA ACQUA	GOUPELLE EAU	WASSER-TROPFENFÄNG.-BEHÄLTER
88	CM 81460415-X13	VERTICAL ROD - BACK	TUBOLARE INOX VERTICALE - POST.	TIGE VERTICALE - ARRIERE	VERTIKALE STANGE - RÜCKSEITIG
89	CM 81460425-X06	VERTICAL ROD - CENTRE	TUBOL. INOX VERTICALE - CENTRO	TIGE VERTICALE - CENTRE	VERTIKALE STANGE - MITTE
90	CM 81460415-X15	VERTICAL ROD - FRONT LEFT	TUBOL. INOX VERTIC. - FRONT. SX	TIGE VERTICALE - GAUCHE AVANT	VERTIK. STANGE - VORDERES LINKS
91	CM 81460425-X07	VERTICAL ROD - FRONT RIGHT	TUBOL. INOX VERTIC. - FRONT. DX	TIGE VERTICALE - DROITE AVANT	VERTIK. STANGE - VORDER. RECHT
92	CM 81460415-X02	LEVELLER	PIEDINO	PIED	FUSS
93	CM 81460425-X05	HORIZONTAL ROD - SIDE	TUBOLARE INOX ORIZZ. - LATERALE	TIGE HORIZONTALE - CÔTÉ	HORIZONTALE STANGE - SEITE
95	CM 81460415-X12	HORIZONTAL ROD - SIDE	TUBOLARE INOX ORIZZ. - LATERALE	TIGE HORIZONTALE - CÔTÉ	HORIZONTALE STANGE - SEITE
100	CM 81460415-X08	HORIZONTAL ROD - BACK UPPER	TUBOL. INOX ORIZZ. - POST. SUP.	TIGE HORIZONTALE - ARRIERE SUP	HORIZ. STANGE-RÜCKSEIT. OBERL.
101	CM 81460415-X16	HORIZONTAL ROD - BACK CENTER	TUBOL. INOX ORIZZ. - POST. CENTR	TIGE HORIZ. - ARRIERE CENTR.	HORIZ. STANGE - RÜCKSEIT. MITTE
103	CM 25702725	DEFLECTOR HOLDER	BLOCCA DEFLETTORE	SUPPORT DE DÉFLECTEUR	UMLENKBLECH-HALTER
105	CM 25702758	DEFLECTOR	DEFLETTORE	DEFLECTEUR	UMLENKBLECH
106	CM 25702706	CART GUIDE	GUIDA CARRELLO	GUIDE DU CHARIOT	KARREN-FÜHRER
107	CM 25702691	METAL BRACKET	SUPPORTO INOX	SUPPORT INOX	ABLASSSCHLAUCH-HALTER
108	CM 25704028	DRAIN HOSE HOLDER	SUPPORTO TUBO SCARICO	SUPPORT TUYAU	ABLASSSCHLAUCH-HALTER
109	CM 25704029	DRAIN HOSE	TUBO SCARICO	TUYAU EN PLASTIQUE	ABLASSSCHLAUCH
110	CM 25702703	BUMBER	PARACOLPI	PARECOUPS	BUMBER
111	CM 25702711	ICE BLADE	PALA GHIACCIO	PALE DE GLACE	EIS-BLATT
112	CM 25704038	S.S. WATER TRAY	RACCOGLIGOCCE	GOUPELLE	EDELSTHAL-WASSER-BEHÄLTER
113	CM 19500107	DRAIN FITTING	PILETTA SCARICO	RACCORD EVACUATION EAU	ABLASSSTUTZEN
114	CM 19500108	NUT	GHIERA	ECRU	MUTTER
115	CM 19500109	ELBOW	GOMITO	COUDE	ABLASSSTUTZEN
116	CM 19500110	PLASTIC FITTING 1" 1/4	RACCORDO 1" 1/4	RACCORD PLASTIQUE 1" 1/4	PLASTIKBEFESTIGUNG 1" 1/4
117	CM 19500111	HOSE BARB	GHIERA PORTAGOMMA	RACCORD TUYAU	VERBINDUNG ROHR
118	CM 25704039	SPACER	DISTANZIALE	ENTRETOISE	DISTANZSCHEIBE

Storage Ice System

SIMAG
ICE MACHINES