SD125 SC/M 120

R 22 A VERSION

SPARE PARTS LIST
CATALOGORIAMBI
CATALOGUE PIÈCES DÉTACHÉES
ERSATZTEILENKATALOG

REV. 01/1991

SD125 - SD125W - SC120 - SC120W - SM120 - SM120W

01 - 91

TAVOLA 1

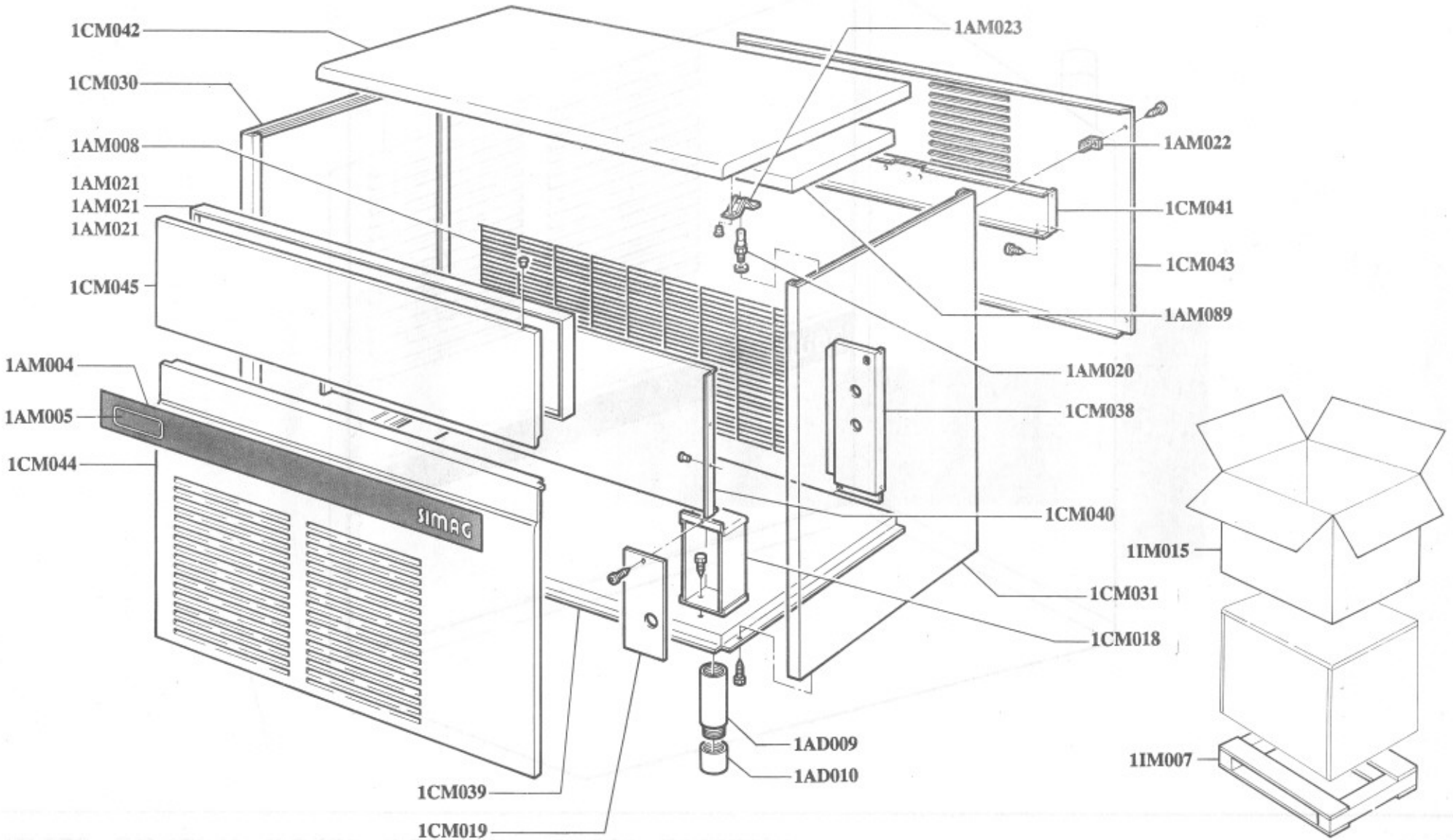

SD125 - SD125W - SC120 - SC120W - SM120 - SM120W

01 - 91

TAVOLA **1**

COD.	DESCRIZIONE	DENOMINATION	DESCRIPTION	BESCHREIBUNG	DESCRIPCION
1AD009	Piede di supporto	*Pied*	Foot	*Gerätefuss*	Pie soporte
1AD010	Piede regolabile	*Pied réglable*	Levelling foot	*Gerätefuss*	Pie regulable
1AM004	Targa serigrafata	*Plaquette marque*	Name plate facia	*Markenschild*	Banda Simag
1AM005	Targhetta modello	*Plaquette d'identification*	Model badge	*Modellbezeichnung*	Etiqueta modelo
1AM008	Griglia posteriore	*Grille postérieure*	Rear grill	*Hinteres Belüftungsgitter*	Rejilla posterior
1AM020	Perno	*Axe*	Stud	*Stift*	Perno
1AM021	Controsportello	*Contreporte*	Door internal plate	*Hinteres Seite Entnahmeklappe*	Contrapuerta
1AM022	Piastrine angolari	*Plaquette angulaires*	Retaining bracket	*Eckhalterung*	Ángulo
1AM023	Molla	*Ressort*	Retainer	*Feder*	Pinza perno
1AM089	Pannello isolante	*Panneau isolant*	Top panel insulation	*Isolierung*	Panel aislamiento
1CM018	Scatola elettrica	*Boîtier électrique*	Electrical box	*Schaltkasten*	Caja eléctrica
1CM019	Coperchio sc. elettrica	*Couvercle boîtier elec.*	Cover electrical box	*Deckel Schaltkasten*	Tapa caja eléctrica
1CM030	Fiancata sinistra	*Joue gauche*	Left side panel	*Linke Gehäuseseite*	Lateral izquierdo
1CM031	Fiancata destra	*Joue droite*	Right side panel	*Rechte Gehäuseseite*	Lateral derecho
1CM038	Supporto scarico	*Support vidange*	Exhaust support	*Auslaufhalterung*	Soporte conexiones
1CM039	Piastra di base	*Plaque de base*	Base	*Grundplatte*	Base
1CM040	Traverso anteriore	*Traverse antérieure*	Front support	*Vordere Verbindungsstrebe*	Soporte frontal
1CM041	Traverso supp. pompa	*Traverse support pompe*	Pump support panel	*Halterung Pumpe*	Soporte sup. bomba
1CM042	Coperchio	*Couvercle*	Top panel	*Deckel*	Tapa superior
1CM043	Pannello posteriore	*Panneau postérieur*	Rear panel	*Hintere Abdeckung*	Panel posterior
1CM044	Pannello anteriore	*Panneau frontal*	Front panel	*Vordere Gehäuseabdeckung*	Panel frontal
1CM045	Sportello	*Porte*	Door	*Entnahmeklappe*	Puerta
1IM007	Base imballo	*Socle*	Pallet	*Palette*	Palet
1IM015	Scatola imballo	*Caisse carton*	Carton	*Karton*	Embalaje

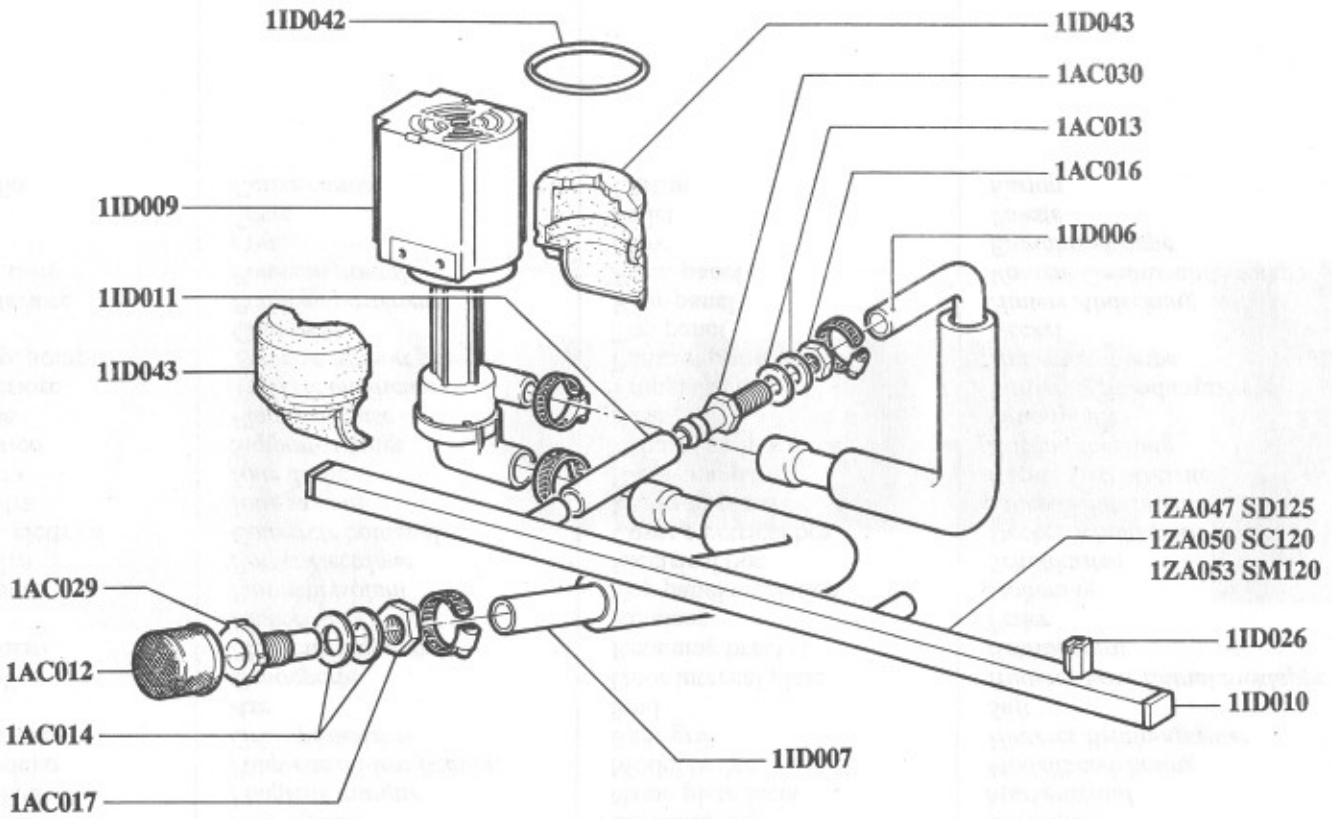
1ID042
1ID043
1AC030
1AC013
1AC016
1ID009
1ID006
1ID011
1ID043
1ZA047 SD125
1ZA050 SC120
1ZA053 SM120
1AC029
1ID026
1AC012
1ID010
1AC014
1ID007
1AC017

SD125 - SD125W - SC120 - SC120W - SM120 - SM120W

01 - 91

TAVOLA 2

COD.	DESCRIZIONE	DENOMINATION	DESCRIPTION	BESCHREIBUNG	DESCRIPCION
1AC012	Filtro aspirazione pompa	*Filtre aspiration pompe*	Pump feeding filter	*Pumpenansaugfilter*	Filtro asp. bomba
1AC013	Rondella	*Rondelle*	Washer	*Unterlegscheibe*	Arandela
1AC014	Rondella	*Rondelle*	Washer	*Unterlegscheibe*	Arandela
1AC016	Dado	*Ecrou*	Nut	*Mutter*	Tuerca
1AC017	Dado	*Ecrou*	Nut	*Mutter*	Tuerca
1AC029	Racc. aspirazione pompa	*Raccord aspiration pompe*	Pump feeding pipe-fitting	*Ansauganschlusstück*	Racord asp. bomba
1AC030	Racc. mandata pompa	*Raccord refoulement pompe*	Pump inlet water pipe-fitting	*Pumpenabflussanschlusstück*	Racord. imp. bomba
1ID006	Tubo mandata pompa	*Tuyau de refoulement pompe*	Pump inlet water pipe	*Pumpenabflusschlauch*	Tubo impul. bomba
1ID007	Tubo aspirazione pompa	*Tuyau d'aspiration pompe*	Pump feeding pipe	*Pumpenansaugschlauch*	Tubo asp. bomba
1ID009	Pompa	*Pompe*	Pump	*Pumpe*	Bomba
1ID010	Tappo per collettore	*Bouchon pour collecteur*	Plug manifold	*Stopfen*	Tapón colector
1ID011	Tubo alimentazione collettore	*Tuyau d'alimentation eau*	Spray bar feeding pipe	*Anschlusschlauch Kollektor*	Tubo aliment. dist.
1ID026	Spruzzatori	*Gicleurs*	Sprayers	*Sprühdüsen*	Aspersores
1ID042	Anello O.R.	*Joint torique*	O-ring	*O-ring*	Junta
1ID043	Isolamento pompa	*Coupelle pour pompe*	Pump cover insulation	*Pumpenisolierung*	Aislamiento bomba
1ZA047 SD125	Collettore	*Collecteur*	Spray bar	*Kollektor*	Colector
1ZA050 SC120	Collettore	*Collecteur*	Spray bar	*Kollektor*	Colector
1ZA053 SM120	Collettore	*Collecteur*	Spray bar	*Kollektor*	Colector

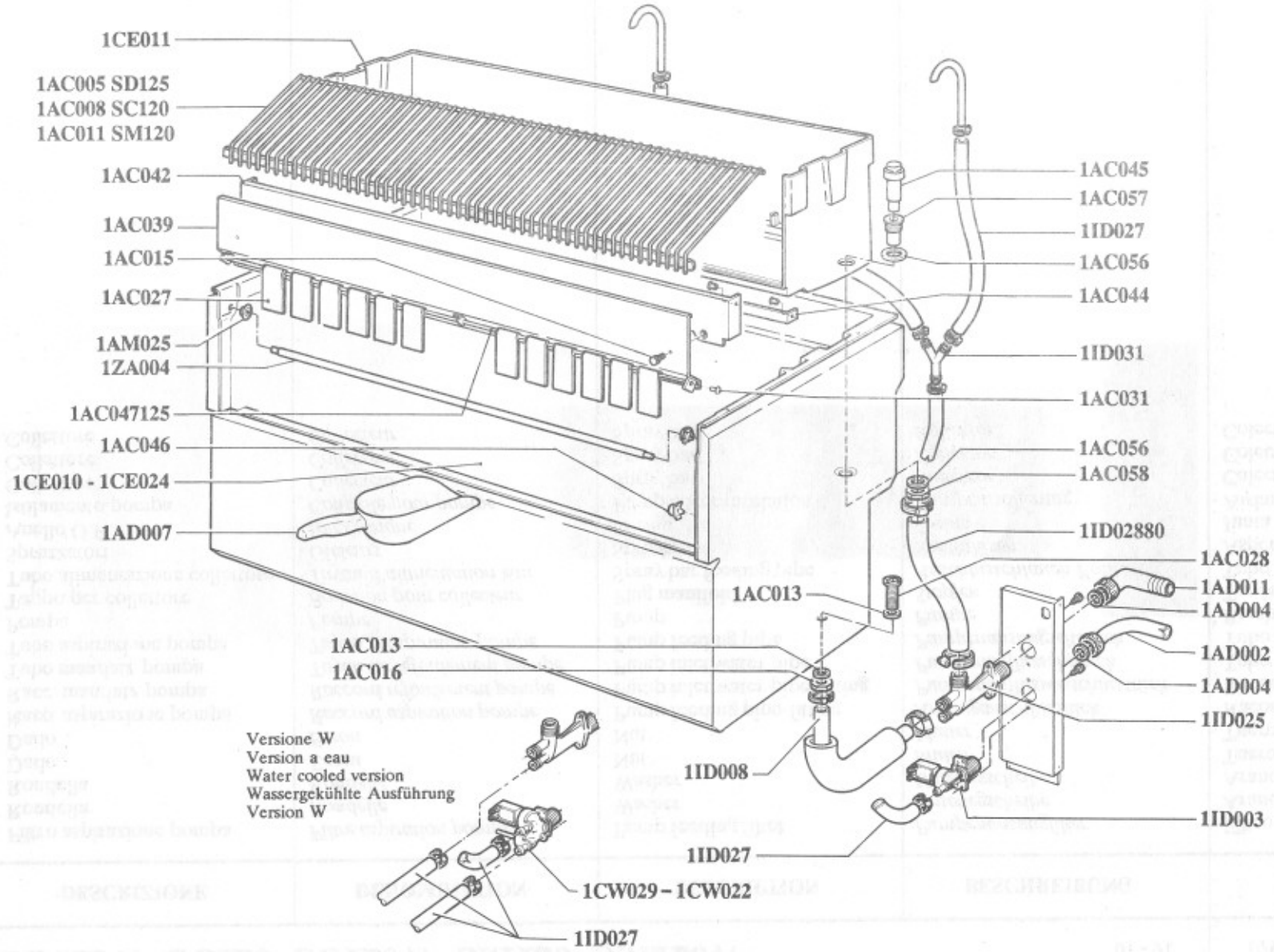
1CE011
1AC005 SD125
1AC008 SC120
1AC011 SM120
1AC042
1AC039
1AC015
1AC027
1AM025
1ZA004
1AC047125
1AC046
1CE010 - 1CE024
1AD007
1AC045
1AC057
1ID027
1AC056
1AC044
1ID031
1AC031
1AC056
1AC058
1ID02880
1AC028
1AD011
1AD004
1AC013
1AD002
1AD004
1ID025
1AC013
1AC016
1ID008
1ID003
1ID027
1CW029 - 1CW022
1ID027
Versione W
Version a eau
Water cooled version
Wassergekühlte Ausführung
Version W

SD125 - SD125W - SC120 - SC120W - SM120 - SM120W

01 - 91

TAVOLA 3

COD.	DESCRIZIONE	DENOMINATION	DESCRIPTION	BESCHREIBUNG	DESCRIPCION
1AC005 SD125	Griglia scorrimento cubetti	*Grille glissement glaçons*	Cube deflector	*Abgleitgrill*	Rejilla caida cubitos
1AC008 SC120	Griglia scorrimento cubetti	*Grille glissement glaçons*	Cube deflector	*Abgleitgrill*	Rejilla caida cubitos
1AC011 SM120	Griglia scorrimento cubetti	*Grille glissement glaçons*	Cube deflector	*Abgleitgrill*	Rejilla caida cubitos
1AC013	Rondella	*Rondelle*	Washer	*Unterlegscheibe*	Arandela
1AC015	Vite godronata	*Vis moletée*	Knurled screw	*Schraube*	Tornillo
1AC016	Dado	*Ecrou*	Nut	*Mutter*	Tuerca
1AC027	Bandierina	*Lamelle*	Spray curtain flap	*Abdeckklappe*	Aleta
1AC028	Racc. scarico contenitore	*Raccord vidange conteneur*	Bin exhaust pipe fitting	*Anschlüsstück Behälter*	Racord desag. deposito
1AC031	Bottone	*Bouton*	Bar pins	*Befestigung Achse*	Tapón
1AC039	Supporto bandierine	*Support lamelles*	Spray curtain support	*Abdeckklappen Halterung*	Soporte aletas
1AC042	Supporto evaporatore	*Support évaporateur*	Evaporator support	*Verdampferauflage*	Soporte evaporador
1AC044	Supporto cella	*Support chambre*	Bin support	*Halterung Innenbehälter*	Soporte cuba
1AC045	Troppo pieno	*Trop-plein*	Overflow exhaust pipe	*Überlauf*	Rebosadero
1AC046	Fermatubo	*Attache de tube*	Pipe fixing	*Behälterthermostathalter.*	Fijación tubos
1AC047125	Tubo ottone	*Tube en laiton*	Spray curtain bar	*Abdeckklappenhalter.*	Barra aletas
1AC056	Rondella	*Rondelle*	Washer	*Unterlegscheibe*	Arandela
1AC057	Raccordo scarico t. pieno	*Raccord écoulem. trop-plein*	Overflow exhaust	*Überlaufrohr*	Racord desag. rebosad
1AC058	Dado	*Ecrou*	Nut	*Mutter*	Tuerca
1AD002	Tubo alimentazione acqua	*Tuyau d'alimentation eau*	Water supply pipe	*Wasseranschlusschlauch*	Tubo aliment. agua
1AD004	Guarnizione	*Joint*	Gasket	*Dichtung*	Junta
1AD007	Sessola	*Sasse*	Ice scoop	*Eisschaufel*	Pala
1AD011	Curva con ghiera	*Coude avec bague*	Elbow with ring nut	*Krümmer*	Codo
1AM025	Passatubo	*Passe-tuyau*	Retainer for door bar	*Halterung*	Pasatubo
1CE010	Cella esterna	*Chambre extérieure*	Bin	*Zelle extern*	Cuba
1CE011	Cella interna	*Chambre intérieur*	Bin	*Zelle intern*	Cubeta interna
1CE024	Schiumatura cella	*Isolation chambre*	Bin insulation	*Zelle Isolierung*	Aislamiento depósito
1CW022	Regolatore	*Regolateur*	Regulator	*Regler*	Restrictor
1CW029	Elettrovalvola doppia	*Electrovanne double*	Doble electric valve	*Elektroventil*	Electroválvula doble
1ID003	Elettrovalvola	*Electrovanne*	Electric valve	*Elektromagnetventil*	Electroválvula
1ID008	Tubo scarico contenitore	*Tuyau vidange conteneur*	Bin exhaust pipe	*Behälterauslaufschlauch*	Tubo desag. depósito
1ID025	Scarico acqua	*Ecoulement eau*	Water exhaust	*Wasserablauf*	Desagüe
1ID027	Tubo	*Tube*	Pipe	*Schlauch*	Tubo
1ID02880	Tubo	*Tube*	Pipe	*Schlauch*	Tubo
1ID031	Raccordo	*Raccord*	Support	*Verbindung*	Racord
1ZA004	Asta sportello	*Tige porte*	Door support bar	*Klappenachse*	Tubo soporte puerta

SD125 - SC120 - SM120

01 - 91

TAVOLA 4

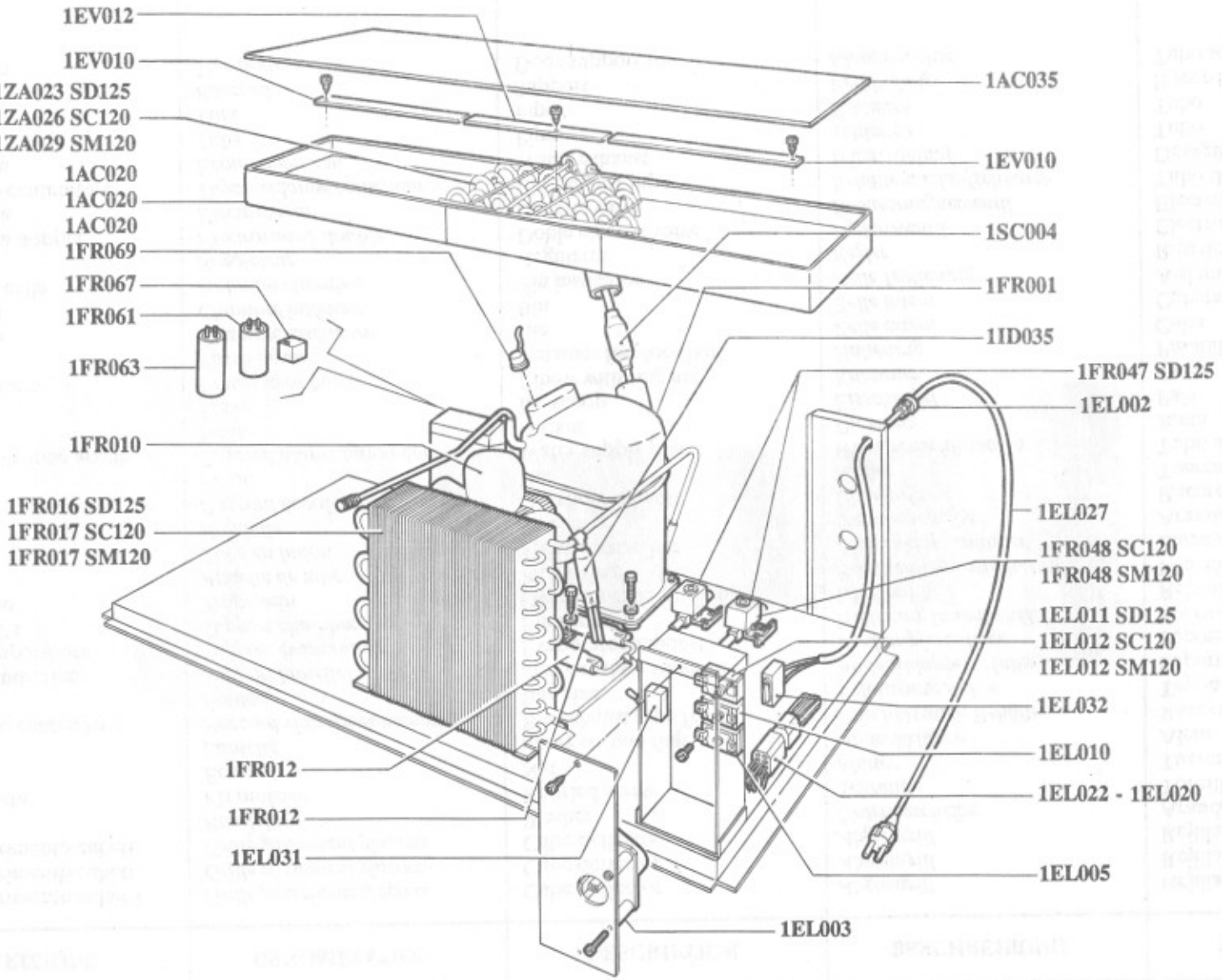

SD125 - SC120 - SM120

01 - 91

TAVOLA 4

COD.	DESCRIZIONE	DENOMINATION	DESCRIPTION	BESCHREIBUNG	DESCRIPCION
1AC020	Guarnizione evaporatore	*Joint d'évaporateur*	Evaporator packing	*Verdampferdichtung*	Bandeja evaporador
1AC035	Coprievaporatore	*Cache-évaporateur*	Evaporator top	*Verdampferabdeckung*	Tapa evaporador
1EL002	Fissacavo	*Serre-câble*	Cable terminal ring	*Kabelklemme*	Tuerca fijación cab.
1EL003	Timer	*Minuterie*	Timer	*Timer*	Temporizador
1EL005	Pressostato	*Pressostat*	Pressure gauge	*Druckwächter*	Presostato
1EL010	Termostato contenitore	*Thermostat conteneur*	Bin thermostat	*Behälterthermostat*	Termostato depósito
1EL011 SD125	Termostato evaporatore	*Thermostat évaporateur*	Evaporator thermostat	*Verdampferthermostat*	Termostato evaporador
1EL012 SC120	Termostato evaporatore	*Thermostat évaporateur*	Evaporator thermostat	*Verdampferthermostat*	Termostato evaporador
1EL012 SM120	Termostato evaporatore	*Thermostat évaporateur*	Evaporator thermostat	*Verdampferthermostat*	Termostato evaporador
1EL020	Cablaggio	*Câblage*	Wiring	*Verkabelung*	Cableado
1EL022	Cablaggio	*Câblage*	Wiring	*Verkabelung*	Cableado
1EL027	Cavo alimentazione	*Câble d'alimentation*	Electric cable	*Kabel*	Cable alimentación
1EL031	Interruttore	*Interrupteur*	Switch	*Schalter*	Interruptor limpieza
1EL032	Interruttore luminoso	*Interrupteur lumineux*	Switch	*Schalter*	Interruptor ON/OFF
1EV010	Piastrina fiss. evaporatore	*Plaque fixat. evaporateur*	Evaporator fastening plate	*Befestigung Verdampfer*	Fijacion evaporador
1EV012	Piastrina fiss. evaporatore	*Plaque fixat. evaporateur*	Evaporator fastening plate	*Befestigung Verdampfer*	Fijacion evaporador
1FR001	Compressore	*Compresseur*	Compressor	*Kompressor*	Compresor
1FR010	Motoventilatore	*Moto-ventilateur*	Electric fan	*Lüfter*	Motoventilador
1FR012	Filtro	*Filtre*	Filter	*Filter*	Filtro
1FR016 SD125	Condensatore	*Condenseur*	Air condenser	*Kondensator*	Condensador
1FR017 SC120	Condensatore	*Condenseur*	Air condenser	*Kondensator*	Condensador
1FR017 SM120	Condensatore	*Condenseur*	Air condenser	*Kondensator*	Condensador
1FR047 SD125	Elettrovalvola gas	*Electrovanne gaz chaud*	Hot gas valve	*Heissgasventil*	Electroválvula gaz
1FR048 SC120	Elettrovalvola gas	*Electrovanne gaz chaud*	Hot gas valve	*Heissgasventil*	Electroválvula gaz
1FR048 SM120	Elettrovalvola gas	*Electrovanne gaz chaud*	Hot gas valve	*Heissgasventil*	Electroválvula gaz
1FR061	Condensatore di marcia	*Condenseur marche*	Running capacitor	*Gangkondensator*	Condensador de marcha
1FR063	Condensatore avviamento	*Condenseur depart*	Start capacitor	*Startkondensator*	Condensador de arranque
1FR067	Relè avviamento	*Relais démarrage*	Starting relay	*Anlaufrelais*	Relé arranque
1FR069	Protettore termico	*Protection thermique*	Thermic protector	*Thermoschutz*	Protector térmico
1ID035	Filtro meccanico	*Filtre mécanique*	Filtre	*Filter*	Filtro
1SC004	Boiler	*Boiler*	Heat exchanger	*Austauscher*	Intercambiador
1ZA023 SD125	Evaporatore	*Evaporateur*	Evaporator	*Verdampfer*	Evaporador
1ZA026 SC120	Evaporatore	*Evaporateur*	Evaporator	*Verdampfer*	Evaporador
1ZA029 SM120	Evaporatore	*Evaporateur*	Evaporator	*Verdampfer*	Evaporador

SD125W - SC120W - SM120W

01 - 91

TAVOLA 5

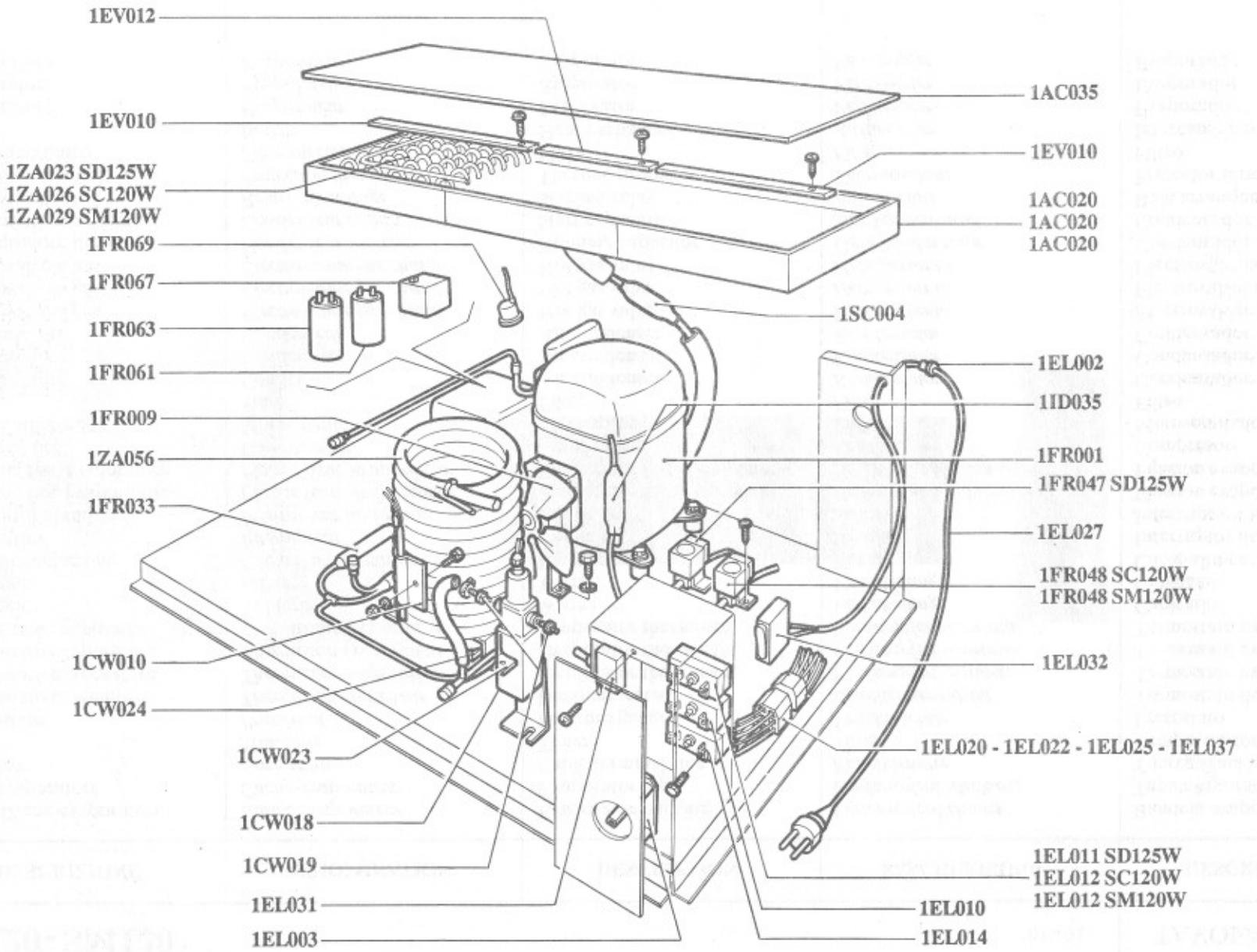

SD125W - SC120W - SM120W

01 - 91

TAVOLA 5

COD.	DESCRIZIONE	DENOMINATION	DESCRIPTION	BESCHREIBUNG	DESCRIPCION
1AC020	Guarnizione evaporatore	*Joint d'évaporateur*	Evaporator packing	*Verdampferdichtung*	Bandeja evaporador
1AC035	Coprievaporatore	*Cache-évaporateur*	Evaporator top	*Verdampferabdeckung*	Tapa evaporador
1CW010	Piastrina bulbo termostato	*Plaquette*	Condenser thermostat bracket	*Thermostatfühler Halterung*	Fij. bulbo termostato
1CW018	Valvola pressostatica	*Soupape pressostatique*	Water valve	*Wasserventil*	Valvula presostatica
1CW019	Portagomma	*Support caoutchouc*	Rubber fixing	*Halterung*	Junta de goma
1CW023	Squadretta fiss. condensatore	*Equerre fixation cond.*	Condenser support	*Kondensator Halterung*	Escuadra fij. cond.
1CW024	Squadretta per condensatore	*Equerre fixation cond.*	Condenser support	*Kondensator Halterung*	Escuadra fij. cond.
1EL002	Fissacavo	*Serre-câble*	Cable terminal ring	*Kabelklemme*	Tuerca fij. cab.
1EL003	Timer	*Minuterie*	Timer	*Timer*	Temporizador
1EL010	Termostato contenitore	*Thermostat conteneur*	Bin thermostat	*Behälterthermostat*	Termostato depósito
1EL011 SD125W	Termostato evaporatore	*Thermostat évaporateur*	Evaporator thermostat	*Verdampferthermostat*	Termostato evaporador
1EL012 SC120W	Termostato evaporatore	*Thermostat évaporateur*	Evaporator thermostat	*Verdampferthermostat*	Termostato evaporador
1EL012 SM120W	Termostato evaporatore	*Thermostat évaporateur*	Evaporator thermostat	*Verdampferthermostat*	Termostato evaporador
1EL014	Termostato condensazione	*Thermostat condensation*	Condenser thermostat	*Verflüssigerthermostat*	Termostato condensador
1EL020	Cablaggio	*Câblage*	Wiring	*Verkabelung*	Cableado
1EL022	Cablaggio	*Câblage*	Wiring	*Verkabelung*	Cableado
1EL025	Cablaggio	*Câblage*	Wiring	*Verkabelung*	Cableado
1EL027	Cavo alimentazione	*Câble d'alimentation*	Electric cable	*Kabel*	Cable alimentación
1EL031	Interruttore	*Interrupteur*	Switch	*Schalter*	Interruptor limpieza
1EL032	Interruttore luminoso	*Interrupteur lumineux*	Switch	*Schalter*	Interruptor ON/OFF
1EL037	Cablaggio	*Câblage*	Wiring	*Verkabelung*	Cableado
1EV010	Piastrina fiss. evaporatore	*Plaque fixat. evaporat.*	Evaporat. fastening plate	*Befestigung Verdampfer*	Fijacion evaporador
1EV012	Piastrina fiss. evaporatore	*Plaque fixat. evaporat.*	Evaporat. fastening plate	*Befestigung Verdampfer*	Fijacion evaporador
1FR001	Compressore	*Compresseur*	Compressor	*Kompressor*	Compresor
1FR009	Motoventilatore	*Moto-ventilateur*	Electric fan	*Lüfter*	Motoventilador
1FR033	Filtro	*Filtre*	Filter	*Filter*	Filtro
1FR047 SD125W	Elettrovalvola gas	*Electrovanne gaz chaud*	Hot gas valve	*Heissgasventil*	Electroválvula gaz
1FR048 SC120W	Elettrovalvola gas	*Electrovanne gaz chaud*	Hot gas valve	*Heissgasventil*	Electroválvula gaz
1FR048 SM120W	Elettrovalvola gas	*Electrovanne gaz chaud*	Hot gas valve	*Heissgasventil*	Electroválvula gaz
1FR061	Condensatore di marcia	*Condenseur marche*	Running capacitor	*Gangkondensator*	Condensador de marcha
1FR063	Condensatore avviamento	*Condenseur depart*	Start capacitor	*Startkondensator*	Condensador de arranque
1FR067	Relè avviamento	*Relais de démarrage*	Starting relay	*Anlaufrelais*	Relé arranque
1FR069	Protettore termico	*Protection thermique*	Thermic protector	*Thermoschutz*	Protector térmico
1ID035	Filtro meccanico	*Filtre mécanique*	Filter	*Filter*	Filtro
1SC004	Boiler	*Boiler*	Heat exchanger	*Austauscher*	Intercambiador
1ZA023 SD125W	Evaporatore	*Evaporateur*	Evaporator	*Verdampfer*	Evaporador
1ZA026 SC120W	Evaporatore	*Evaporateur*	Evaporator	*Verdampfer*	Evaporador
1ZA029 SM120W	Evaporatore	*Evaporateur*	Evaporator	*Verdampfer*	Evaporador
1ZA056	Condensatore	*Condenseur*	Water condenser	*Verflüssiger*	Condensador