DESPIECE TECNICO

# Hornos a gas
# Fours à gaz
# Gas ovens
# Gas heissluftdämpfer
# Forni a gas
# Fornos a gás

**Modelos:**

**COG-061**
**COG-101**
**VG-101**
**VPG-101**

***Enero 2011 January***
***Revisado Septiembre 2011 / Revised September 2011***

FAGOR

FAGOR INDUSTRIAL

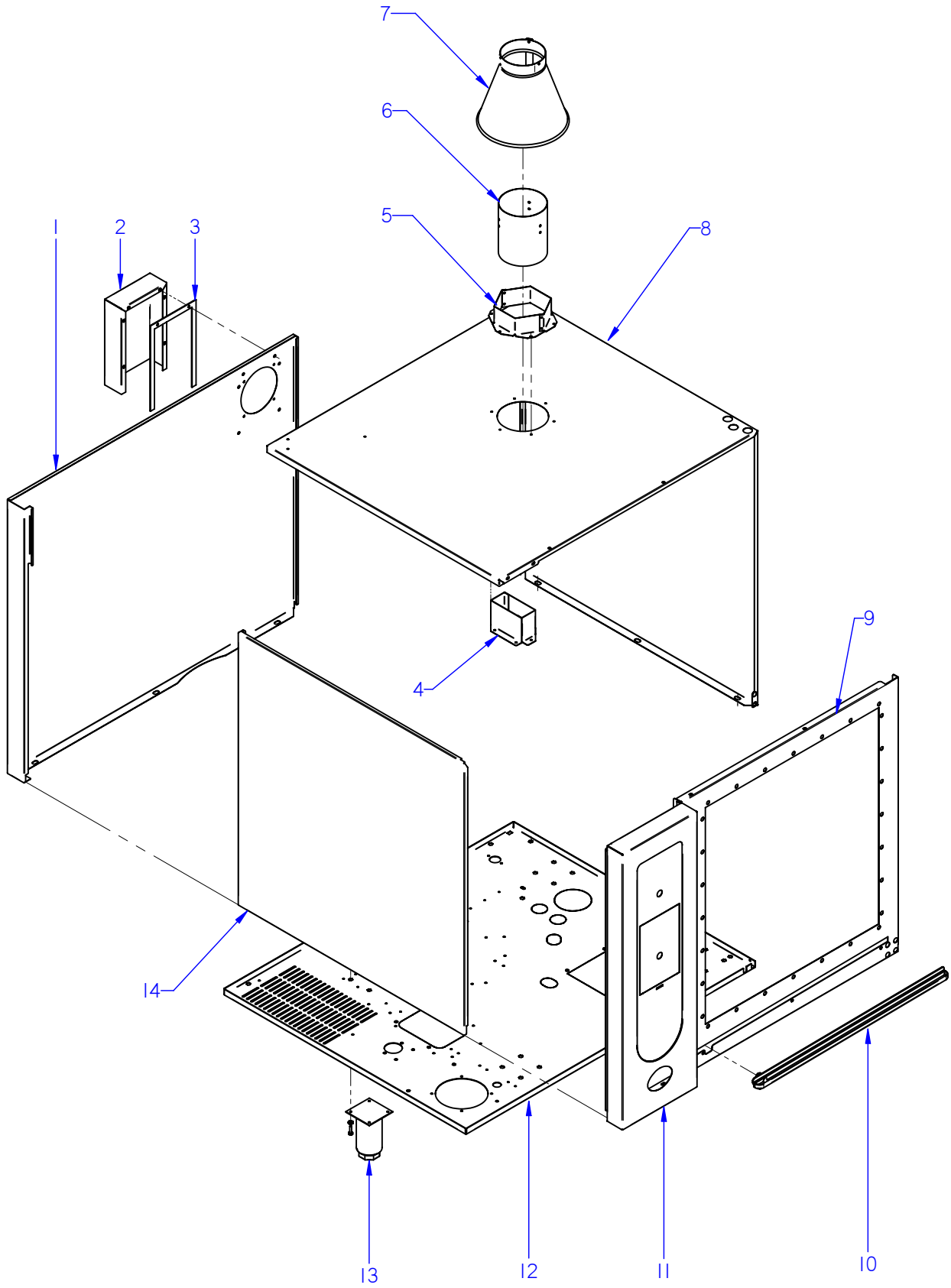


ITEM MARCADO EN COLOR = REPUESTO RECOMENDADO
COLOURED ITEM = RECOMMENDED SPARE PART

| N plano | Firma | Fecha | Aparato | MUEBLE / UNIT | Lamina | |
|---|---|---|---|---|---|---|
| C-2778 | | 2011-01 | HORNOS COG-061 / COG-101 | | 1 | Fagor Industrial S.Coop. FAGOR Oñate |

| MOD. | HORNOS / OVEN | ZONA / ZONE | MUEBLE / UNIT | PLANO DIAGRAM | C-2778 |
|---|---|---|---|---|---|

| ITEM | CODIGO | DENOMINACION | TEXTO | COG-061 | COG-101 | | | | | | NOTAS |
|---|---|---|---|---|---|---|---|---|---|---|---|
| 1 | T902802000 | PANEL POST. EXTERIOR 6/11 | REAR EXTERIOR PANEL 6/11 | 1 | _ | | | | | | |
| 1 | T812804000 | PANEL POST. EXTERIOR 10/11 | REAR EXTERIOR PANEL 10/11 | _ | 1 | | | | | | |
| 2 | T812806500 | CHAPA SEPARACION IPX5 | SEPARATION PLATE IPX5 | 1 | 1 | | | | | | |
| | Q221342000 | REMACHE EXAGONAL M5 | HEXAGONAL RIVET M.5 | 6 | 6 | | | | | | |
| | Q232030000 | ARANDELA A5 | WASHER A.5 | 6 | 6 | | | | | | |
| | Q242030000 | ARANDELA ABANICO A5 A.304 | FAN SHAPED WASHER A.5 | 6 | 6 | | | | | | |
| | Q012031000 | TORNILLO EXAGONAL M5x10 A304 | HEXAGONAL SCREW M.5x10 | 6 | 6 | | | | | | |
| 3 | T812811000 | JUNTA IPX5 | SEAL IPX5 | 1 | 1 | | | | | | |
| 4 | T012605000 | CHIMENEA INTERIOR COMPLETA | COMPLETE INTER. FLUEPIPE | 1 | 1 | | | | | | |
| 5 | T832610000 | GUIA CHIMENEA | FLUEPIPE GUIDANCE | 2 | 2 | | | | | | |
| | Q412002000 | REMACHE TUBULAR Ø4x7.5 | TUBULAR RIVET Ø4x7.5 | 16 | 16 | | | | | | |
| | Q012042000 | TORNILLO EXAGONAL M6x15 | HEXAGONAL BOLT M6x15 | 2 | 2 | | | | | | |
| | Q232040000 | ARANDELA A6 | WASHER A.6 | 2 | 2 | | | | | | |
| | Q242040000 | ARANDELA ABANICO A6 A.304 | FAN SHAPED WASHER A.6 | 2 | 2 | | | | | | |
| 6 | R292646500 | CONDUCTO HUMOS | SMOKE DUCT | 1 | 1 | | | | | | |
| 7 | R272612000 | CHIMENEA | FLUEPIPE | 1 | 1 | | | | | | |
| S/Nº | R272614000 | SOPORTE CHIMENEA HCG/HGC | CHIMNEY SUPPORT | 3 | 3 | | | | | | |
| | Q412002000 | REMACHE TUBULAR Ø4x7.5 | TUBULAR RIVET Ø4x7.5 | 15 | 15 | | | | | | |
| 8 | T932804000 | CUERPO EXTERIOR COG-061 | EXTERIOR BODY COG-061 | 1 | _ | | | | | | ELIMINADO 01.03.11 |
| 8 | T932804500 | CUERPO EXTERIOR COG-061 | EXTERIOR BODY COG-061 | 1 | _ | | | | | | INTRODUCIDO 01.03.11 |
| 8 | T832801000 | CUERPO EXTERIOR 10/11 HGC | EXTERIOR BODY 10/11 HGC | _ | 1 | | | | | | ELIMINADO 01.03.11 |
| 8 | T832801500 | CUERPO EXTERIOR 10/11 HGC | EXTERIOR BODY 10/11 HGC | _ | 1 | | | | | | INTRODUCIDO 01.03.11 |
| 9 | T912801000 | PANEL FRONTAL | FRONT PANEL | 1 | _ | | | | | | |
| 9 | T812801000 | PANEL FRONTAL 10-11 | FRONT PANEL 10/11 | _ | 1 | | | | | | |
| | Q221342000 | REMACHE EXAGONAL M5 | HEXAGONAL RIVET M.5 | 11 | 11 | | | | | | |
| | Q232040000 | ARANDELA A6 | WASHER A.6 | 3 | 3 | | | | | | |
| | Q242040000 | ARANDELA ABANICO A6 A.304 | FAN SHAPED WASHER A.6 | 3 | 3 | | | | | | |
| | Q012042000 | TORNILLO EXAGONAL M6x15 | HEXAGONAL BOLT M6x15 | 3 | 3 | | | | | | |
| | Q222011000 | REMACHE EXAGONAL M5 INOX | HEXAGONAL RIVET M5 | 3 | 3 | | | | | | |
| | | | | | | | | | | | |
| | | | | | | | | | | | |

| MOD. | HORNOS / OVEN | ZONA / ZONE | MUEBLE / UNIT | PLANO DIAGRAM | C-2778 |
|---|---|---|---|---|---|

| ITEM | CODIGO | DENOMINACION | TEXTO | COG-061 | COG-101 | | | | | | NOTAS |
|---|---|---|---|---|---|---|---|---|---|---|---|
| 10 | T842809000 | RECOGEAGUAS PLAST 6-10/11 | PLAST SPRING WATER COLLE. | 1 | 1 | | | | | | |
| | Q242020000 | ARANDELA ABANICO A4 A.304 | FAN SHAPED WASHER A.4 | 3 | 3 | | | | | | |
| | Q032021000 | TORNILLO ALOMADO M4x10 | CURVED SCREW M.4x10 | 3 | 3 | | | | | | |
| 11 | T902808000 | PANEL PORTAMANDOS HEI 6/11 | CONTROL PANEL HEI 6/11 | 1 | _ | | | | | | |
| 11 | T802802000 | PANEL PORTAMANDOS HGC 10/11 | CONTROL PANEL HGC 10/11 | _ | 1 | | | | | | |
| S/Nº | T902807000 | JUNTA PORTAMANDOS VERT 6/11 | CONTROL HOLDER SEAL VERT 1 | 1 | _ | | | | | | |
| S/Nº | T812809000 | JUNTA PORTAMANDOS VERT 10/11 | CONTROL HOLDER SEAL VERT 1 | _ | 1 | | | | | | |
| S/Nº | T812810000 | JUNTA PORTAMAND. HORZ 10/11 | CONTROL HOLDER SEAL 10/11 | 1 | 1 | | | | | | |
| | Q221342000 | REMACHE EXAGONAL M5 | HEXAGONAL RIVET M.5 | 3 | 3 | | | | | | |
| 12 | T912802000 | BASE EXTERIOR | EXTERIOR | 1 | 1 | | | | | | |
| | Q221343000 | REMACHE EXAGONAL M.6 | HEXAGONAL RIVET M.6 | 32 | 32 | | | | | | |
| | Q221342000 | REMACHE EXAGONAL M5 | HEXAGONAL RIVET M.5 | 7 | 7 | | | | | | |
| 13 | X260151000 | PATA REGULABLE | REGULABLE LEG | 4 | 4 | | | | | | |
| | Q232040000 | ARANDELA A6 | WASHER A.6 | 16 | 16 | | | | | | |
| | Q242040000 | ARANDELA ABANICO A6 A.304 | FAN SHAPED WASHER A.6 | 16 | 16 | | | | | | |
| | Q012043000 | TORNILLO EXAGONAL M6x20 | HEXAGONAL BOLT M6x20 | 16 | 16 | | | | | | |
| 14 | T902803000 | PANEL EXT IZQUIERDO 6-11 E | LEFT PANEL 6-11 E | 1 | _ | | | | | | |
| 14 | T812805000 | PANEL EXT IZQUIERDO 10-11 E | LEFT PANEL 10-11 E | _ | 1 | | | | | | |
| | Q302022000 | ARANDELA 16X6X1.2 A.304 | FLAT WASHER 16x6x1,2 | 6 | 6 | | | | | | |
| | Q242040000 | ARANDELA ABANICO A6 A.304 | FAN SHAPED WASHER A.6 | 6 | 6 | | | | | | |
| | Q012042000 | TORNILLO EXAGONAL M6x15 | HEXAGONAL BOLT M6x15 | 6 | 6 | | | | | | |
| | | | | | | | | | | | |
| | | | | | | | | | | | |
| | | | | | | | | | | | |
| | | | | | | | | | | | |
| | | | | | | | | | | | |
| | | | | | | | | | | | |
| | | | | | | | | | | | |
| | | | | | | | | | | | |
| | | | | | | | | | | | |
| | | | | | | | | | | | |

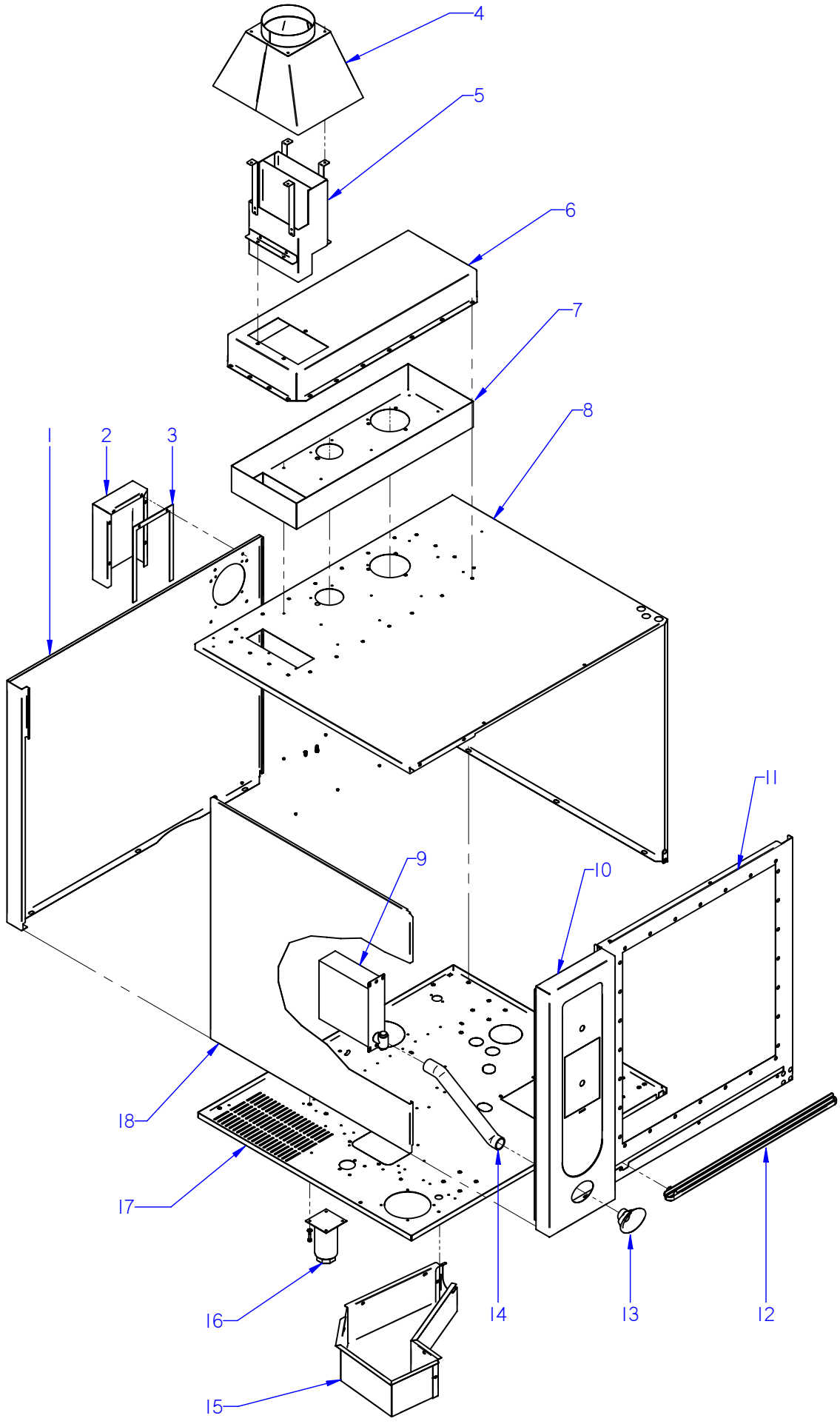


ITEM MARCADO EN COLOR = REPUESTO RECOMENDADO
COLOURED ITEM = RECOMMENDED SPARE PART

| N plano | Firma | Fecha | Aparato | MUEBLE / UNIT | Lamina | |
|---|---|---|---|---|---|---|
| C-2779 | | 2011-01 | HORNOS VG-101 / VPG-101 | | 2 | Fagor Industrial S.Coop. FAGOR Oñate |

| MOD. | HORNOS / OVEN | ZONA / ZONE | MUEBLE / UNIT | PLANO DIAGRAM | C-2779 |
|---|---|---|---|---|---|

| ITEM | CODIGO | DENOMINACION | TEXTO | VG-101 | VPG-101 | | | | | | NOTAS |
|---|---|---|---|---|---|---|---|---|---|---|---|
| 1 | T842806000 | PANEL POST. EXTERIOR 10-11 G | REAR EXTERIOR PANEL10-11G | 1 | 1 | | | | | | |
| 2 | T812806500 | CHAPA SEPARACION IPX5 | SEPARATION PLATE IPX5 | 1 | 1 | | | | | | |
| | Q221342000 | REMACHE EXAGONAL M5 | HEXAGONAL RIVET M.5 | 6 | 6 | | | | | | |
| | Q232030000 | ARANDELA A5 | WASHER A.5 | 6 | 6 | | | | | | |
| | Q242030000 | ARANDELA ABANICO A5 A.304 | FAN SHAPED WASHER A.5 | 6 | 6 | | | | | | |
| | Q012031000 | TORNILLO EXAGONAL M5x10 A304 | HEXAGONAL SCREW M.5x10 | 6 | 6 | | | | | | |
| 3 | T812811000 | JUNTA IPX5 | SEAL IPX5 | 1 | 1 | | | | | | |
| 4 | T122820000 | CHIMENEA EXTERIOR COMPLETA | COMPLETE EXTERIOR FLUEPIPE | 1 | 1 | | | | | | |
| | Q412002000 | REMACHE AVINOX Ø4x10 | AVINOX RIVET Ø4x10 | 12 | 12 | | | | | | |
| 5 | T122816000 | SALIDA DE COLECTOR | MANIFOLD OUTPUT | 1 | 1 | | | | | | |
| S/Nº | T112815000 | SOPORTE DE CHIMENEA | CHIMNEY SUPPORT | 4 | 4 | | | | | | |
| 6 | T842808500 | TAPA BANDEJA COLECTOR | TOP MANIFOLD | 1 | 1 | | | | | | |
| | 3715200000 | JUNTA CRISTAL | GLASS SEAL | 2 | 2 | | | | | | |
| | Q222011000 | REMACHE EXAGONAL M5 INOX | HEXAGONAL RIVET M5 | 3 | 3 | | | | | | |
| 7 | T842805000 | BANDEJA DE COLECTOR | COMPL. MANIFOLD TRAY | 1 | 1 | | | | | | |
| | Q232040000 | ARANDELA A6 | WASHER A.6 | 3 | 3 | | | | | | |
| | Q242040000 | ARANDELA ABANICO A6 A.304 | FAN SHAPED WASHER A.6 | 3 | 3 | | | | | | |
| | Q162040000 | TUERCA EXAGONAL M6 | HEXAGONAL NUT M6 | 3 | 3 | | | | | | |
| | Q222011000 | REMACHE EXAGONAL M5 INOX | HEXAGONAL RIVET M5 | 1 | 1 | | | | | | |
| | Q412002000 | REMACHE AVINOX Ø4x10 | AVINOX RIVET Ø4x10 | 8 | 8 | | | | | | |
| | Q232030000 | ARANDELA A5 | WASHER A.5 | 1 | 1 | | | | | | |
| | Q242030000 | ARANDELA ABANICO A5 A.304 | FAN SHAPED WASHER A.5 | 1 | 1 | | | | | | |
| | Q012032000 | TORNILLO EXAGONAL M5x15 A304 | HEXAGONAL SCREW M.5x15 | 1 | 1 | | | | | | |
| 8 | T842803000 | CUERPO EXTERIOR 10/11 HGV-P | EXTERIOR BODY 10/11 HGV-P | 1 | 1 | | | | | | ELIMINADO 01.03.11 |
| 8 | T842803500 | CUERPO EXTERIOR 10/11 HGV-P | EXTERIOR BODY 10/11 HGV-P | 1 | 1 | | | | | | INTRODUCIDO 01.03.11 |
| | Q222011000 | REMACHE EXAGONAL M5 INOX | HEXAGONAL RIVET M5 | 3 | 3 | | | | | | |
| 9 | T452809000 | DUCHA | SHOWER | 1 | 1 | | | | | | |
| S/Nº | T452834000 | MANGO DUCHA | SHOWER HANDLE | 1 | 1 | | | | | | INTRODUCIDO 31.05.10 |
| | Q232030000 | ARANDELA A5 | WASHER A.5 | 6 | 6 | | | | | | |
| | Q242030000 | ARANDELA ABANICO A5 A.304 | FAN SHAPED WASHER A.5 | 6 | 6 | | | | | | |
| | Q012032000 | TORNILLO EXAGONAL M5x15 A304 | HEXAGONAL SCREW M.5x15 | 6 | 6 | | | | | | |

| MOD. | HORNOS / OVEN | ZONA / ZONE | MUEBLE / UNIT | PLANO DIAGRAM | C-2779 |
|---|---|---|---|---|---|

| ITEM | CODIGO | DENOMINACION | TEXTO | VG-101 | VPG-101 | | | | | | NOTAS |
|---|---|---|---|---|---|---|---|---|---|---|---|
| 10 | T842811000 | PANEL PORTAMANDO HGV 10/11 | CONTROL PANEL HGV 10/11 | 1 | _ | | | | | | |
| 10 | T852803000 | PANEL PORTAMANDO 101 VPG | CONTROL PANEL 101 VPG | _ | 1 | | | | | | |
| S/Nº | T812809000 | JUNTA PORTAMANDOS VERT 10/11 | CONTROL HOLDER SEAL VERT 1 | 1 | 1 | | | | | | |
| S/Nº | T842814000 | JUNTA PORTAMAND. HORZ 10/11 | CONTROL HOLDER SEAL 10/11 | 1 | 1 | | | | | | |
| 11 | T812801000 | PANEL FRONTAL 10-11 | FRONT PANEL 10/11 | 1 | 1 | | | | | | |
| | Q221342000 | REMACHE EXAGONAL M5 | HEXAGONAL RIVET M.5 | 11 | 11 | | | | | | |
| | Q232040000 | ARANDELA A6 | WASHER A.6 | 3 | 3 | | | | | | |
| | Q242040000 | ARANDELA ABANICO A6 A.304 | FAN SHAPED WASHER A.6 | 3 | 3 | | | | | | |
| | Q012042000 | TORNILLO EXAGONAL M6x15 | HEXAGONAL BOLT M6x15 | 3 | 3 | | | | | | |
| | Q222011000 | REMACHE EXAGONAL M5 INOX | HEXAGONAL RIVET M5 | 3 | 3 | | | | | | |
| 12 | T842809000 | RECOGEAGUAS PLAST 6-10/11 | PLAST SPRING WATER COLLE. | 1 | 1 | | | | | | |
| | Q242020000 | ARANDELA ABANICO A4 A.304 | FAN SHAPED WASHER A.4 | 3 | 3 | | | | | | |
| | Q032021000 | TORNILLO ALOMADO M4x10 | CURVED SCREW M.4x10 | 3 | 3 | | | | | | |
| 13 | T922801000 | EMBELLECEDOR DUCHA | SHOWER TRIM | _ | 1 | | | | | | |
| 14 | 3714100000 | TUBO SILICONA Ø 38*31 | SILICON PIPE Ø 38*31 | 1 | 1 | | | | | | |
| | Q881305000 | ABRAZADERA 25*40 | CLAMP 25*40 | 2 | 2 | | | | | | |
| 15 | T650701500 | CAJA CUB SIST LIMP VPG 202 SOL. | CLEANING SYSTEM BOX | _ | 1 | | | | | | ELIMINADO 01.03.11 |
| 15 | T920701000 | CAJA CUBRE BOMBA LAVADO | CLEANING PUMP BOX | _ | 1 | | | | | | INTRODUCIDO 01.03.11 |
| | Q221342000 | REMACHE EXAGONAL M5 | HEXAGONAL RIVET M.5 | _ | 9 | | | | | | |
| S/Nº | T650702000 | TAPA CUBRE SISTEMA LAVADO | COVER WASHING SYSTEM BOX | _ | 1 | | | | | | ELIMINADO 01.03.11 |
| S/Nº | T330752500 | TAPA SISTEMA LAVADO | TOP WASHING SYSTEM | _ | 1 | | | | | | INTRODUCIDO 01.03.11 |
| | Q242030000 | ARANDELA ABANICO A5 A.304 | FAN SHAPED WASHER A.5 | _ | 9 | | | | | | |
| | Q152004000 | TORNILLO APLAST. M5X13 A 304 | FLAT SCREW M.5x13 | _ | 9 | | | | | | |
| S/Nº | T550702000 | GUIA1 CAJA CUBRE SIST LAVADO | GUIDE1 WASHING SYSTEM BOX | _ | 1 | | | | | | ELIMINADO 01.03.11 |
| S/Nº | T550701000 | GUIA2 CAJA CUBRE SIST LAVADO | GUIDE2 WASHING SYSTEM BOX | _ | 1 | | | | | | ELIMINADO 01.03.11 |
| 16 | X260151000 | PATA REGULABLE | REGULABLE LEG | 4 | 4 | | | | | | |
| | Q232040000 | ARANDELA A6 | WASHER A.6 | 16 | 16 | | | | | | |
| | Q242040000 | ARANDELA ABANICO A6 A.304 | FAN SHAPED WASHER A.6 | 16 | 16 | | | | | | |
| | Q012043000 | TORNILLO EXAGONAL M6X20 A304 | HEXAGONAL SCREW M6X20 | 16 | 16 | | | | | | |
| | | | | | | | | | | | |
| | | | | | | | | | | | |

| MOD. | HORNOS / OVEN | ZONA / ZONE | MUEBLE / UNIT | PLANO DIAGRAM | C-2779 |
|---|---|---|---|---|---|

| ITEM | CODIGO | DENOMINACION | TEXTO | VG-101 | VPG-101 | | | | | | NOTAS |
|---|---|---|---|---|---|---|---|---|---|---|---|
| 17 | T842801000 | BASE EXTERIOR 10/11 GAS | EXTERIOR BASE 20/11 | 1 | 1 | | | | | | |
| | Q221343000 | REMACHE EXAGONAL M.6 | HEXAGONAL RIVET M.6 | 32 | 32 | | | | | | |
| | Q221342000 | REMACHE EXAGONAL M.5 | HEXAGONAL RIVET M.5 | 11 | 11 | | | | | | |
| 18 | T812805000 | PANEL EXT IZQUIERDO 10-11 E | LEFT PANEL 10-11 E | 1 | 1 | | | | | | |
| | Q242040000 | ARANDELA ABANICO A6 A.304 | FAN SHAPED WASHER A.6 | 6 | 6 | | | | | | |
| | Q012042000 | TORNILLO EXAGONAL M6x15 | HEXAGONAL BOLT M6x15 | 6 | 6 | | | | | | |

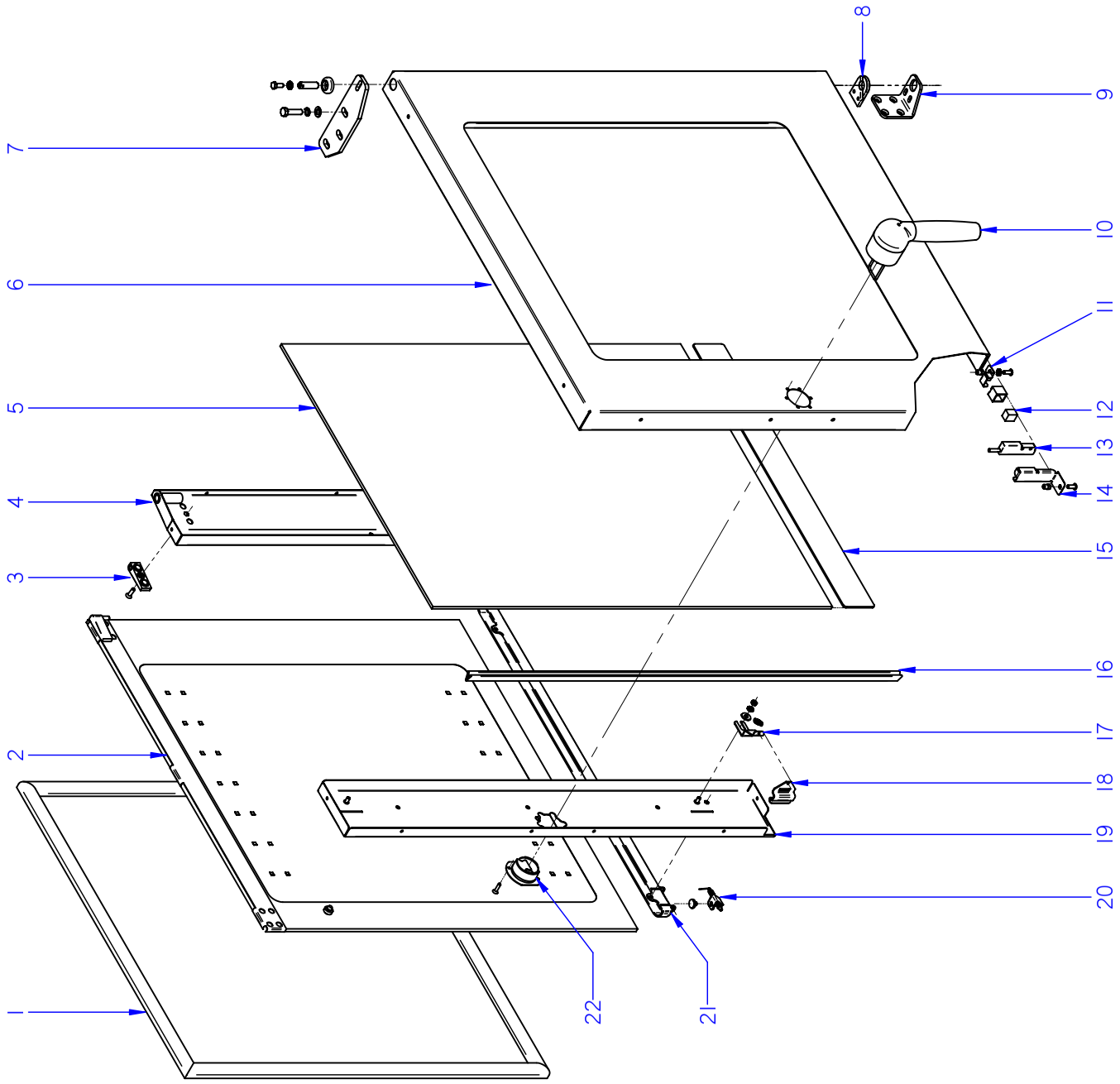


ITEM MARCADO EN COLOR = REPUESTO RECOMENDADO
COLOURED ITEM = RECOMMENDED SPARE PART

| N plano | Firma | Fecha | Aparato | | Lamina | |
|---|---|---|---|---|---|---|
| C-2780 | | 2011-01 | PUERTA<br>HORNOS COG; VG; VPG 061 / 101 | | 3 | Fagor Industrial S.Coop.<br>Oñate |

| MOD. | HORNOS / OVEN | ZONA / ZONE | PUERTA / DOOR | PLANO DIAGRAM | C-2780 |
|---|---|---|---|---|---|

| ITEM | CODIGO | DENOMINACION | TEXTO | COG-061 | COG-101 | VG-101 | VPG-101 | | | | NOTAS |
|---|---|---|---|---|---|---|---|---|---|---|---|
| | **1100003139** | **KIT PUERTA 6/11 COMPL.** | **DOOR 6/11 KIT** | **1** | _ | _ | _ | | | | |
| | **1100003141** | **KIT PUERTA 10/11 COMPL.** | **DOOR 10/11 KIT** | _ | **1** | **1** | **1** | | | | |
| 1 | R660503000 | JUNTA DE PUERTA 6/11 | DOOR JOINT 6/11 | 1 | _ | _ | _ | | | | |
| 1 | R670500000 | JUNTA DE PUERTA 10/11 | DOOR JOINT 10/11 | _ | 1 | 1 | 1 | | | | |
| S/Nº | R660526000 | FIJACION JUNTA DE PUERTA 6/11 | DOOR SEAL FASTENING 6/11 | 1 | _ | _ | _ | | | | |
| S/Nº | R670513000 | FIJACION JUNTA DE PUERTA 10/11 | DOOR SEAL FASTENING 10/11 | _ | 1 | 1 | 1 | | | | |
| | Q032021000 | TORNILLO ALOMADO M4X10 | CURVED SCREW M.4x10 | 24 | 28 | 28 | 28 | | | | |
| **2** | **1100003130** | **KIT CRISTAL INTER. 6/11** | **6/11 INNER GLASS KIT** | **1** | _ | _ | _ | | | | |
| **2** | **1100003132** | **KIT CRISTAL INTER. 10/11** | **10/11 INNER GLASS KIT** | _ | **1** | **1** | **1** | | | | |
| 3 | R670615000 | BASE DE BISAGRA | HINGE BASE | 2 | 2 | 2 | 2 | | | | |
| | Q042032000 | TORNILLO AVELLANADO M5X15 | COUNTERSUNK SCREW M.5x15 | 2 | 2 | 2 | 2 | | | | |
| 4 | T900505000 | CONTRAPUERTA BISAGRA 6/11 | INNER DOOR HINGE 6/11 | 1 | _ | _ | _ | | | | |
| 4 | T840504000 | CONTRAPUERTA BISAGRA 10/11 | INNER DOOR HINGE 10/11 | _ | 1 | 1 | 1 | | | | |
| | Q221341000 | REMACHE EXAGONAL M.4 | HEXAGONAL RIVET M.4 | 1 | 1 | 1 | 1 | | | | |
| | Q222011000 | REMACHE EXAGONAL M.5 | HEXAGONAL RIVET M.5 | 2 | 2 | 2 | 2 | | | | |
| 5 | R660610000 | CRISTAL EXTERIOR 6/11 | EXTERNAL GLASS 6/11 | 1 | _ | _ | _ | | | | |
| 5 | R670627000 | CRISTAL EXTERIOR 10/11 | EXTERNAL GLASS 10/11 | _ | 1 | 1 | 1 | | | | |
| | R670617000 | TOPE CRISTAL INTERIOR | INTERIOR GLASS BUFFER | 3 | 4 | 4 | 4 | | | | |
| 6 | T900501500 | PANEL PUERTA 6/11 | DOOR PANEL 6/11 | 1 | _ | _ | _ | | | | |
| 6 | T840501500 | PANEL PUERTA 10/11 | DOOR PANEL 10/11 | _ | 1 | 1 | 1 | | | | |
| S/Nº | T900508000 | CALZO PUERTA | DOOR WEDGE | 1 | 1 | 1 | 1 | | | | |
| | Q242040000 | ARANDELA ABANICO A6 A.304 | FAN SHAPED WASHER A.6 | 2 | 2 | 2 | 2 | | | | |
| | Q012041000 | TORNILLO EXAGONAL M6x10 | HEXAGONAL BOLT M6x10 | 2 | 2 | 2 | 2 | | | | |
| | Q062040000 | TORNILLO AVELLANADO M6x16 | COUNTERSUNK SCREW M6x16 | 4 | 4 | 4 | 4 | | | | |
| 7 | T130500000 | BISAGRA SUPERIOR | UPPER HINGE | 1 | 1 | 1 | 1 | | | | |
| | Q302025000 | ARANDELA 8,4X20X1.5 | FLAT WASHER 8,4X20X1.5 | 3 | 3 | 3 | 3 | | | | |
| | Q261050000 | ARANDELA MUELLE A8 | SPRING WASHER A8 | 3 | 3 | 3 | 3 | | | | |
| | Q012055000 | TORNILLO EXAGONAL M8X30 | HEXAGONAL BOLT M8X30 | 3 | 3 | 3 | 3 | | | | |
| S/Nº | R660534000 | EJE SUPERIOR | UPPER SHAFT | 1 | 1 | 1 | 1 | | | | |
| | R662807000 | ARANDELA AMARRE | DOOR ANCHORING WASHER | 1 | 1 | 1 | 1 | | | | |
| | Z850519000 | RESORTE 06329 | SPRING 06329 | 1 | 1 | 1 | 1 | | | | |

| MOD. | HORNOS / OVEN | ZONA / ZONE | PUERTA / DOOR | PLANO DIAGRAM | C-2780 |
|---|---|---|---|---|---|

| ITEM | CODIGO | DENOMINACION | TEXTO | COG-061 | COG-101 | VG-101 | VPG-101 | | | | NOTAS |
|---|---|---|---|---|---|---|---|---|---|---|---|
| 8 | R660549000 | GUIA EJE INFERIOR FUNDIDO | LOWER SHAFT GUIDE | 1 | 1 | 1 | 1 | | | | |
| | Q062040000 | TORNILLO AVELLANADO M6X16 | COUNTERSUNK SCREW M.6x16 | 4 | 4 | 4 | 4 | | | | |
| 9 | R660551000 | BISAGRA INFERIOR PLEGADA | LOWER FOLDER HINGE | 1 | 1 | 1 | 1 | | | | |
| 10 | T900506000 | MANILLA COMPLETA | HANDLE | 1 | 1 | 1 | 1 | | | | |
| | Q042022000 | TORNILLO AVELLANADO M4X15 | COUNTERSUNK SCREW M.4x15 | 3 | 3 | 3 | 3 | | | | |
| 11 | T130513000 | SOPORTE IMAN | MAGNET HOLDER | 1 | 1 | 1 | 1 | | | | |
| | Q222011000 | REMACHE EXAGONAL M.5 | HEXAGONAL RIVET M.5 | 1 | 1 | 1 | 1 | | | | |
| | Q242030000 | ARANDELA ABANICO A5 A.304 | FAN SHAPED WASHER A.5 | 1 | 1 | 1 | 1 | | | | |
| | Q152004000 | TORNIL. APLASTADO M5X13 A 304 | FLAT SCREW M.5x13 | 1 | 1 | 1 | 1 | | | | |
| 12 | Z200506000 | IMAN | MAGNET | 1 | 1 | 1 | 1 | | | | |
| S/Nº | Z200507000 | PROTECTOR IMAN | MAGNET PROTECTOR | 1 | 1 | 1 | 1 | | | | |
| 13 | Z100522000 | INTERRUPTOR MAGNETICO AC | MAGNETIC SWITCH AC | 1 | 1 | 1 | 1 | | | | |
| 14 | T302819000 | SOPORTE MICRO PUERTA | DOOR MICRO SWITCH | 1 | 1 | 1 | 1 | | | | |
| | Q152004000 | TORNIL. APLASTADO M5X13 A 304 | FLAT SCREW M.5x13 | 1 | 1 | 1 | 1 | | | | |
| 15 | T800501000 | TOPE CRISTAL EXTERIOR 10/11 | EXTERNAL GLASS STOP | 1 | 1 | 1 | 1 | | | | |
| 16 | 3715200000 | JUNTA CRISTAL | WINDOW SEAL | 2 | 2 | 2 | 2 | | | | |
| 17 | R670612000 | BASE DE PESTILLO | LATCH BASE | 2 | 2 | 2 | 2 | | | | |
| 18 | R670613000 | PESTILLO | LATCH | 2 | 2 | 2 | 2 | | | | |
| | R660605000 | MUELLE TENSOR | LATCH TENSOR SPRING | 2 | 2 | 2 | 2 | | | | |
| | Q302022000 | ARANDELA 16X6X1.2 A.304 | FLAT WASHER 16x6x1,2 | 2 | 2 | 2 | 2 | | | | |
| | Q242030000 | ARANDELA ABANICO A5 A.304 | FAN SHAPED WASHER A.5 | 2 | 2 | 2 | 2 | | | | |
| | Q162030000 | TUERCA EXAGONAL M5 | HEXAGONAL NUT M.5 | 2 | 2 | 2 | 2 | | | | |
| 19 | T900504000 | CONTRAP MANILLA COMPL 6/11 | COMPLETE HANDLE DOOR 6/11 | 1 | _ | _ | _ | | | | |
| 19 | T840502000 | CONTRAP MANILLA COMPL 10/11 | COMPLETE HANDLE DOOR 10/11 | _ | 1 | 1 | 1 | | | | |
| | Q221341000 | REMACHE EXAGONAL M4 | HEXAGONAL RIVET M.4 | 3 | 3 | 3 | 3 | | | | |
| 20 | T840508000 | CIERRE RECOGEAGUAS | WATER COLLECTOR COVER | 1 | 1 | 1 | 1 | | | | |
| | T300518000 | TAPON CIERRE CANALETA | CAP CHANNEL COVER | 1 | 1 | 1 | 1 | | | | ELIMINADO 01.03.11 |
| | T840510000 | JUNTA CIERRE RECOGEAGUAS | JOINT WATER COLLECTOR COV | 1 | 1 | 1 | 1 | | | | INTRODUCIDO 01.03.11 |
| | T840509000 | MUELLE CIERRE RECOGEAGUAS | SPRING WATER COLLECTOR CO | 1 | 1 | 1 | 1 | | | | |
| 21 | T840506000 | RECOGEAGUAS PUERTA 6-10/11 | DOOR SPRING WATER COLLECT | 1 | 1 | 1 | 1 | | | | |
| | Q042022000 | TORNILLO AVELLANADO M4X15 | COUNTERSUNK SCREW M.4x15 | 2 | 2 | 2 | 2 | | | | |

| MOD. | HORNOS / OVEN | ZONA / ZONE | PUERTA / DOOR | PLANO DIAGRAM | C-2780 |
|---|---|---|---|---|---|

| ITEM | CODIGO | DENOMINACION | TEXTO | COG-061 | COG-101 | VG-101 | VPG-101 | | | | NOTAS |
|---|---|---|---|---|---|---|---|---|---|---|---|
| 22 | T900509000 | EMBELLECEDOR POSTERIOR ASA | REAR TRIM HANDLE | 1 | 1 | 1 | 1 | | | | |
| | Q042022000 | TORNILLO AVELLANADO M4X15 | COUNTERSUNK SCREW M.4x15 | 2 | 2 | 2 | 2 | | | | |
| S/Nº | T900507000 | ANCLAJE PUERTA | DOOR ANCHORING | 1 | 1 | 1 | 1 | | | | |

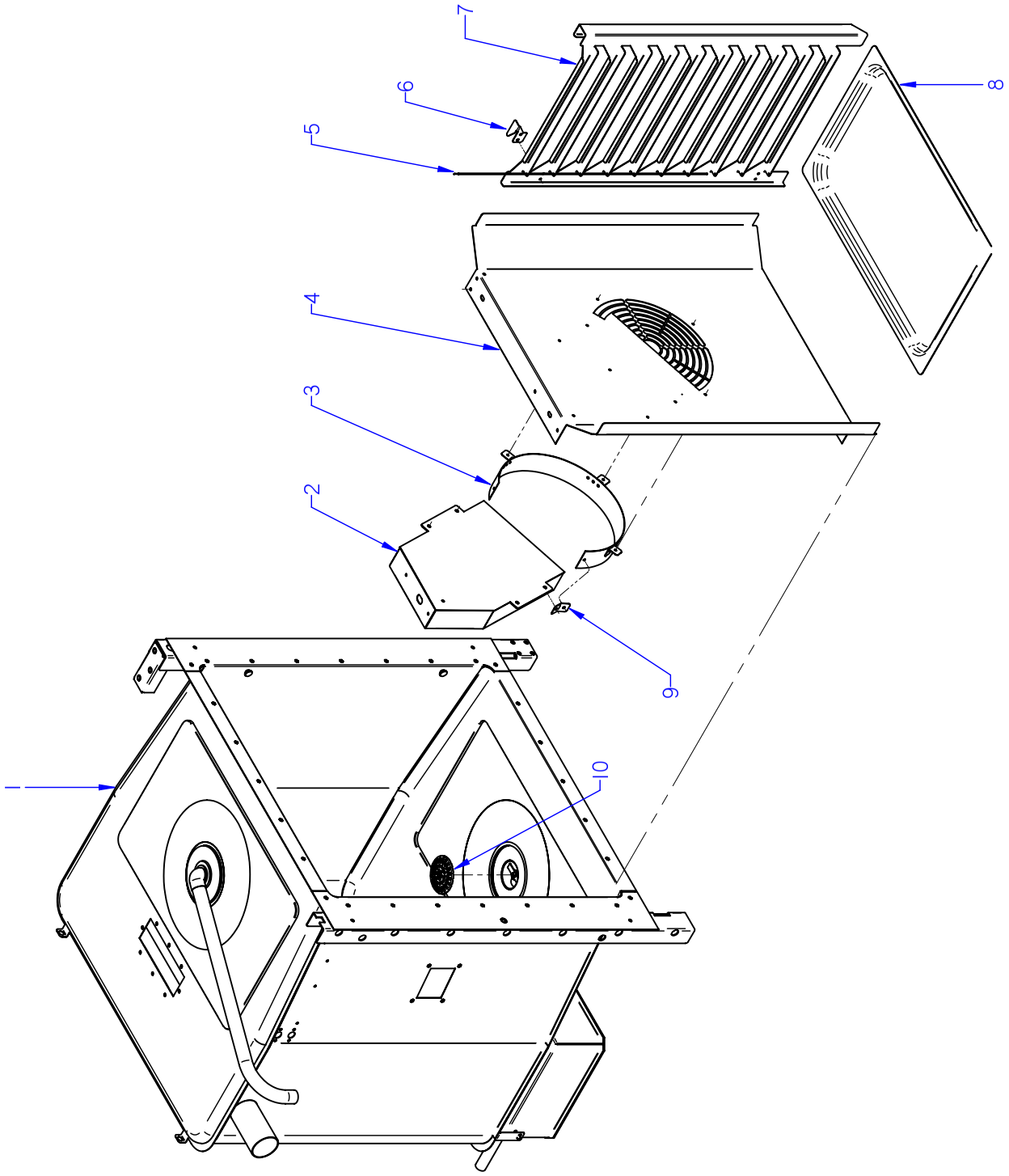


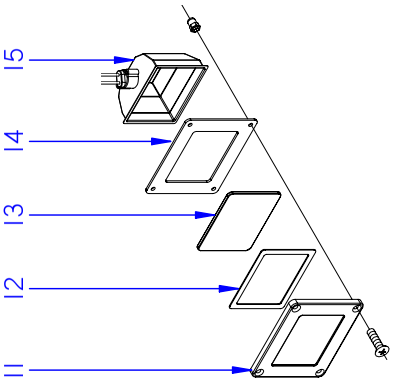


DETALLE DE LAMPARA

ITEM MARCADO EN COLOR = REPUESTO RECOMENDADO
COLOURED ITEM = RECOMMENDED SPARE PART

| N plano | Firma | Fecha | Aparato | Lamina | |
|---|---|---|---|---|---|
| C-2781 | | 2011-01 | MUEBLE INTERIOR / INTERIOR OVEN<br>HORNOS COG- / VG / VPG-061/101 | 4 | Fagor Industrial S.Coop.<br>Oñate |

| MOD. | HORNOS / OVEN | ZONA / ZONE | MUEBLE INTERIOR / INTERIOR OVEN | PLANO DIAGRAM | C-2781 |
|---|---|---|---|---|---|

| ITEM | CODIGO | DENOMINACION | TEXTO | COG-061 | COG-101 | VG-101 | VPG-101 | | | | NOTAS |
|---|---|---|---|---|---|---|---|---|---|---|---|
| 1 | T932602000 | CUERPO INTERIOR COG-061 | INTERIOR BODY COG-061 | 1 | _ | _ | _ | | | | |
| 1 | T832601000 | CUERPO INTERIOR HGC-10/11 | INTERIOR BODY HGC-10/11 | _ | 1 | _ | _ | | | | |
| 1 | T842601000 | CUERPO INTERIOR HGV-10/11 | INTERIOR BODY HGV-10/11 | _ | _ | 1 | _ | | | | |
| 1 | T852601000 | CUERPO INTERIOR HGP-10/11 | INTERIOR BODY HGP-10/11 | _ | _ | _ | 1 | | | | |
| S/Nº | T360712000 | PUNTA DIFUSORA LAVADO | WASHING DISPENSER POINT | _ | _ | _ | 1 | | | | |
| 2 | T932607000 | CORBATA SOLDADA COG-061 | WELD TIE COG-061 | 1 | _ | _ | _ | | | | |
| 2 | T832606000 | CORBATA SOLDADA HGC-10/11 | WELD TIE HGC-10/11 | _ | 1 | _ | _ | | | | |
| 2 | T142639000 | CONDUCTO DE HUMOS | SMOKE DUCT | _ | _ | 1 | 1 | | | | |
| | Q412002000 | REMACHE AVINOX Ø4x10 | RIVET AVINOX Ø4x10 | 18 | 18 | 18 | 18 | | | | |
| S/Nº | T082619000 | FIJACION CORBATA | FIXING TIE | 6 | 6 | _ | _ | | | | INTRODUCIDO 01.06.11 |
| 3 | T932606000 | SUPLEMEN. CUBREVEN. COG-061 | FAN COVER SUPPLE. COG-061 | 1 | _ | _ | _ | | | | |
| 3 | T832611000 | SUPLEMEN. CUBREVEN. COG-101 | FAN COVER SUPPLE. COG-101 | _ | 1 | _ | _ | | | | |
| 3 | T132645000 | SUPLEMEN. CUBREVEN. ABIERTO | FAN COVER SUPPLEMEN. OPE | _ | _ | 1 | 1 | | | | |
| 4 | T932604000 | CUBREVENTILADOR COG-061 | FAN COVER COG-061 | 1 | _ | _ | _ | | | | |
| 4 | T832605000 | CUBREVENTILADOR HGC 10/11 | FAN COVER HGC 10/11 | _ | 1 | _ | _ | | | | |
| 4 | T112665000 | CUBREVENTILADOR HGV 10/11 | FAN COVER HGV 10/11 | _ | _ | 1 | 1 | | | | |
| S/Nº | T302643000 | FIJACIÓN SUPLEMENTO | FAN COVER SUPPLEM. BINDING | 7 | 11 | 4 | 4 | | | | |
| 5 | R662693000 | TOPE DE PORTABANDEJAS 6/11 | TRAY HOLDER BUFFER 6/11 | 2 | _ | _ | _ | | | | |
| 5 | R672692000 | TOPE DE PORTABANDEJAS 10/11 | TRAY HOLDER BUFFER 10/11 | _ | 2 | 2 | 2 | | | | |
| 6 | R672691000 | ESCUADRA SUJECCION 6-10/11 | FASTENING BRACKET 6-10/11 | 4 | 4 | 4 | 4 | | | | |
| | Q412002000 | REMACHE AVINOX Ø4x10 | RIVET AVINOX Ø4x10 | 8 | 8 | 8 | 8 | | | | |
| 7 | R692616000 | GUIA BANDEJAS DERECHA 6/11 | RIGHT TRAY GUIDE 6/11 | 1 | _ | _ | _ | | | | |
| 7 | R672612000 | GUIA BANDEJAS DERECHA 10/11 | RIGHT TRAY GUIDE 10/11 | _ | 1 | 1 | 1 | | | | |
| S/Nº | R692617000 | GUIA BANDEJAS IZQUIERDA 6/11 | LEFT TRAY GUIDE 6/11 | 1 | _ | _ | _ | | | | |
| S/Nº | R672613000 | GUIA BANDEJAS IZQUIERDA 10/11 | LEFT TRAY GUIDE 10/11 | _ | 1 | 1 | 1 | | | | |
| 8 | R252816000 | BANDEJA 1/1 P:20 | TRAY 1/1 P:20 | 1 | 1 | 1 | 1 | | | | |
| S/Nº | R672665000 | PARRILLA 1X1 (REF. 2025201) | GRILLE 1X1 (REF. 2025201) | 1 | 1 | 1 | 1 | | | | |
| 9 | T142640000 | PESTAÑA CIERRE CUBREVENTILAD | FAN COVER LOCK TAB | _ | _ | 2 | 2 | | | | |
| 10 | T642657000 | FILTRO DESAGÜE | DRAINAGE FILTER | 1 | 1 | 1 | 1 | | | | |
| | | | | | | | | | | | |
| | | | | | | | | | | | |

| MOD. | HORNOS / OVEN | ZONA / ZONE | MUEBLE INTERIOR / INTERIOR OVEN | PLANO DIAGRAM | C-2781 |
|---|---|---|---|---|---|

| ITEM | CODIGO | DENOMINACION | TEXTO | COG-061 | COG-101 | VG-101 | VPG-101 | | | | NOTAS |
|---|---|---|---|---|---|---|---|---|---|---|---|
| 11 | T303047000 | MARCO LAMPARA | LAMP FRAME | 1 | 1 | 1 | 1 | | | | |
| | R663013000 | LAMPARA 10W-12V | LAMP 10W-12V | 1 | 1 | 1 | 1 | | | | |
| | Q222041000 | REMACHE EXAGONAL M.4 INOX | HEXAGONAL RIVET M4 (INOX) | 4 | 4 | 4 | 4 | | | | |
| | Q032021000 | TORNILLO ALOMADO M4X10 | CURVED SCREW M4X10 | 4 | 4 | 4 | 4 | | | | |
| 12 | T303027000 | JUNTA INTERIOR LAMPARA | LAMP INTERIOR SEAL | 1 | 1 | 1 | 1 | | | | |
| 13 | T303025000 | CRISTAL LAMPARA | LAMP GLASS | 1 | 1 | 1 | 1 | | | | |
| 14 | T303026000 | JUNTA EXTERIOR LAMPARA | LAMP EXTERIOR SEAL | 1 | 1 | 1 | 1 | | | | |
| 15 | T303023000 | PORTALAMPARAS | LAMP HOLDER | 1 | 1 | 1 | 1 | | | | |

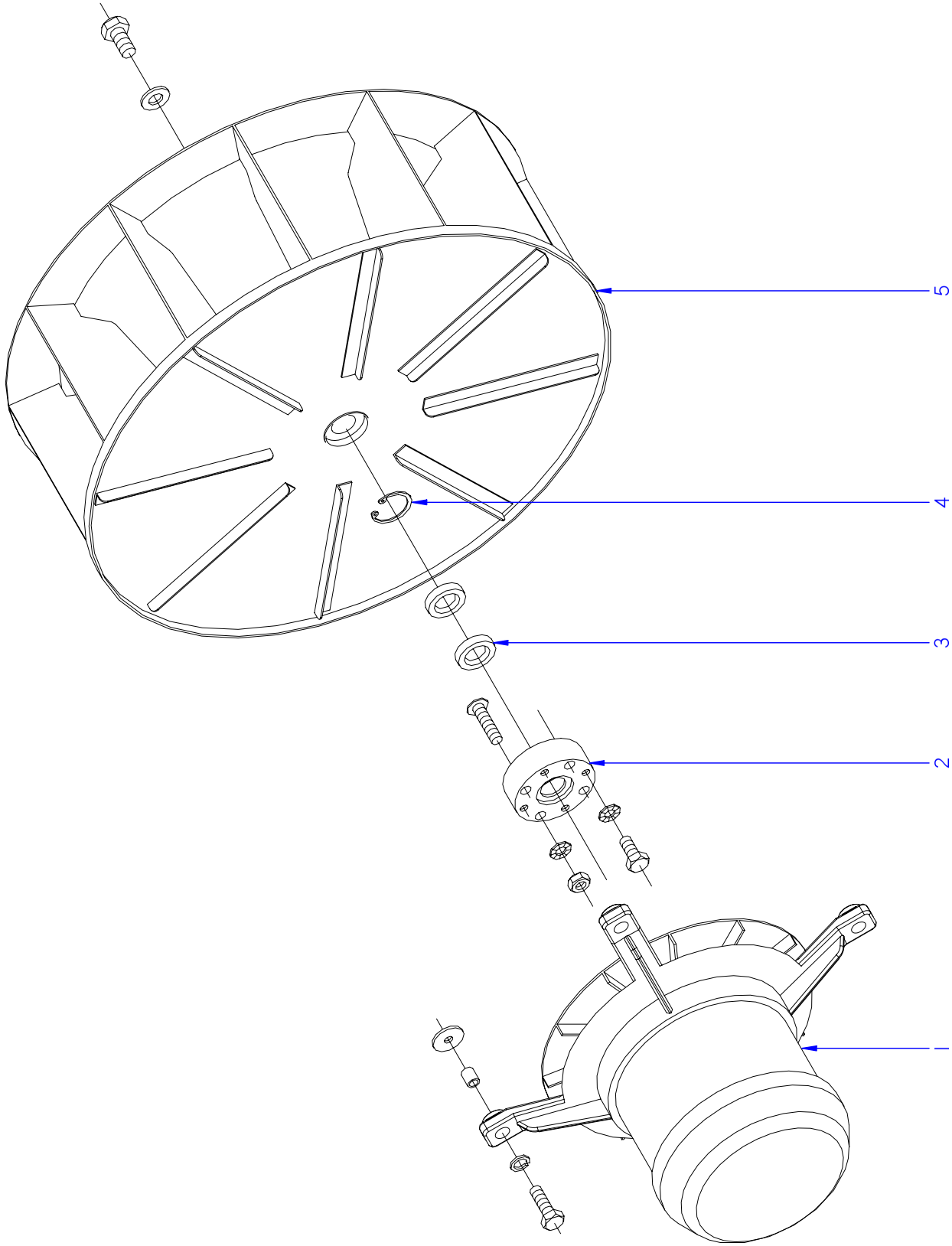


ITEM MARCADO EN COLOR = REPUESTO RECOMENDADO
COLOURED ITEM = RECOMMENDED SPARE PART

| N plano | Firma | Fecha | Aparato | Lamina | |
|---|---|---|---|---|---|
| C-2782 | | 2011-01 | TURBINA / TURBINE<br>HORNOS COG / VG / VPG-061/101 | 5 | Fagor Industrial S.Coop.<br>Oñate |

| MOD. | HORNOS / OVEN | ZONA / ZONE | TURBINA / TURBINE | PLANO DIAGRAM | C-2782 |
|---|---|---|---|---|---|

| ITEM | CODIGO | DENOMINACION | TEXTO | COG-061 | COG-101 | VG-101 | VPG-101 | | | | NOTAS |
|---|---|---|---|---|---|---|---|---|---|---|---|
| 1 | T303066000 | MOTOR DOBLE GIRO 1VEL. | DOUBLE ROTATION MOTOR 1VE | 1 | _ | _ | _ | | | | |
| 1 | T323040000 | MOTOR DOBLE GIRO 1VEL. 750W. | DOUBLE ROTATION MOTOR 1VE | _ | 1 | 1 | 1 | | | | |
| | R663057000 | CASQUILLO AMARRE MOTOR | ANCHORAGE MOTOR CAP | 4 | 4 | 4 | 4 | | | | |
| | Q012044000 | TORNILLO EXAGONAL M6X25 | HEXAGONAL BOLT M6x25 | 4 | 4 | 4 | 4 | | | | |
| | Q262040000 | ARANDELA GROW. A6 A.304 | WASHER GROW. A6 A.304 | 4 | 4 | 4 | 4 | | | | |
| | Q301304000 | ARANDELA PLANA 23X6.5X2 | FLAT WASHER 23X6.5X2 | 4 | 1 | 4 | 4 | | | | |
| 2 | R662684000 | CASQUILLO RETEN | SEAL BUSHING | 1 | 1 | 1 | 1 | | | | |
| | R662685000 | JUNTA CASQUILLO RETEN | SEAL BUSHING GASKET | 1 | 4 | 1 | 1 | | | | |
| | Q262040000 | ARANDELA GROW. A6 A.304 | WASHER GROW. A6 A.304 | 4 | 4 | 4 | 4 | | | | |
| | Q162040000 | TUERCA EXAGONAL M6 | HEXAGONAL NUT M6 | 4 | 4 | 4 | 4 | | | | |
| | Q232040000 | ARANDELA A6 | WASHER A6 | 4 | 2 | 4 | 4 | | | | |
| 3 | R662627000 | RETEN 17X28X7V | SEAL 17X28X7V | 2 | 1 | 2 | 2 | | | | |
| 4 | Q302023000 | ANILLO DE SEGURIDAD Ø28X1.2 | SAFETY RING Ø 28X1.2 | 1 | 1 | 1 | 1 | | | | |
| 5 | T083005000 | TURBINA ALAB.REC Ø280X127 | TURBINE ALAB.REC Ø280X127 | 1 | _ | _ | _ | | | | |
| 5 | R703050000 | TURBINA REC Ø350X127 HANNING | TURBINE REC Ø350X127 HANNIN | _ | 1 | 1 | 1 | | | | |
| | R763010000 | ARANDELA SEGURIDAD HANNING | SAFETY WASHER HANNING | 1 | 1 | 1 | 1 | | | | |
| | Q012063000 | TORNIL. EXAGONAL M10X20 A.304 | HEXAGONAL BOLT M10X20 A.304 | 1 | 1 | 1 | 1 | | | | |

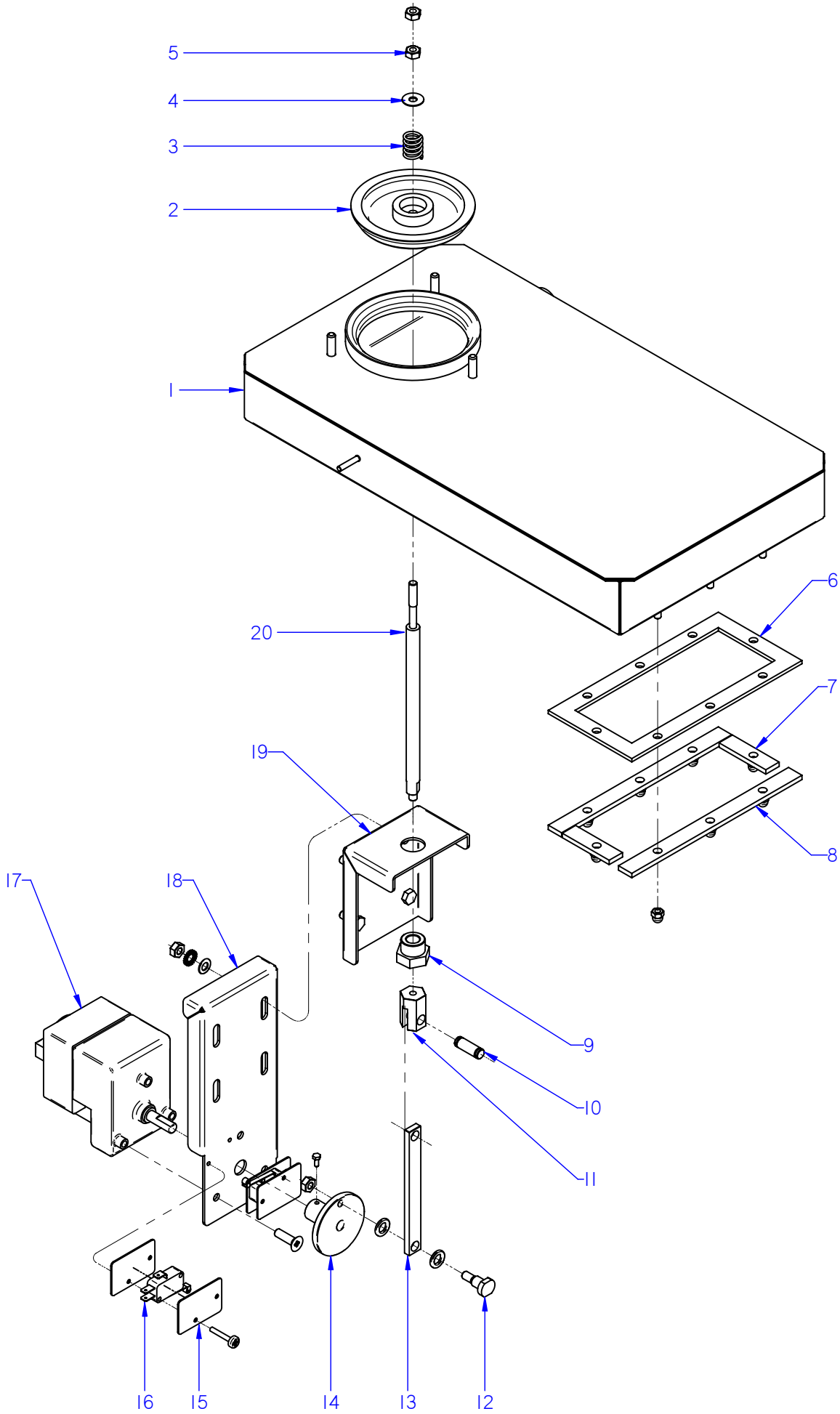


ITEM MARCADO EN COLOR = REPUESTO RECOMENDADO
COLOURED ITEM = RECOMMENDED SPARE PART

| N plano | Firma | Fecha | Aparato | | Lamina | |
|---|---|---|---|---|---|---|
| C-2783 | | 2011-01 | CHIMENEA / CHIMNEY<br>HORNOS VG-101 / VPG-101 | | 6 | Fagor Industrial S.Coop. FAGOR<br>Oñate |

| MOD. | HORNOS / OVEN | ZONA / ZONE | CHIMENEA / CHIMNEY | PLANO DIAGRAM | C-2783 |
|---|---|---|---|---|---|

| ITEM | CODIGO CODE | DENOMINACION | NAME | VG-101 | VPG-101 | | | | | | NOTAS |
|---|---|---|---|---|---|---|---|---|---|---|---|
| 1 | T842608000 | CHIMENEA COM. HGV-10/11 | COMPLET. CHIMNEY HGV-10/11 | 1 | _ | | | | | | |
| 1 | T852603000 | CHIMENEA COM. HGP 10/11 | COMPLET. CHIMNEY HGP 10/11 | _ | 1 | | | | | | |
| 2 | T115115000 | RETENCION DE VAPORES | CLOSE CHIMNEY | 1 | 1 | | | | | | |
| 3 | R725008000 | RESORTE | SPRING | 1 | 1 | | | | | | |
| 4 | Q302022000 | ARANDELA 16X6X1.2 A.304 | FLAT WASHER 16x6x1,2 | 2 | 2 | | | | | | |
| 5 | Q162040000 | TUERCA EXAGONAL M6 | HEXAGONAL NUT M.6 | 2 | 2 | | | | | | |
| 6 | T122630000 | JUNTA CHIMENEA | FLUEPIPE SEAL | 1 | 1 | | | | | | |
| 7 | T132634000 | PLETINA REF CORTO INFERIOR | BOTTOM DECK | 2 | 2 | | | | | | |
| | Q232030000 | ARANDELA A5 | FLAT WASHER A.5 | 8 | 8 | | | | | | |
| | Q242030000 | ARANDELA ABANICO A5 A.304 | FAN SHAPED WASHER A.5 | 8 | 8 | | | | | | |
| | Q213131000 | TUERCA SOMBRERETE M5 | SOMBRERETE NUT M5 | 8 | 8 | | | | | | |
| 8 | T122631000 | PLETINA REF LARGO INFERIOR | LONG BOTTOM DECK | 2 | 2 | | | | | | |
| 9 | R725030000 | TUERCA GUIA RETENCION | RETAINER NUT GUIDE | 1 | 1 | | | | | | |
| | Q307067000 | JUNTA TORICA 9.19x2.62 | O-RING 9.19x2.62 | 1 | 1 | | | | | | |
| 10 | T135046000 | EJE DE GUIA DE RETENCION | GUIDE SHAFT HOLDING | 1 | 1 | | | | | | |
| | Q271033000 | ARANDELA DE SEGURIDAD 6 | SAFETY WASHER 6 | 2 | 2 | | | | | | |
| 11 | T135045000 | SUPLEMEN. EJE DE RETENCION | AXIS CHARGE RETENTION | 1 | 1 | | | | | | |
| 12 | T135009000 | EJE DE LEVA | CAM SHAFT | 1 | 1 | | | | | | |
| | Q308013000 | ARANDELA Ø14xØ8x2 | FLAT WASHER Ø14xØ8x2 | 2 | 2 | | | | | | |
| | Q162040000 | TUERCA EXAGONAL M6 | HEXAGONAL NUT M.6 | 1 | 1 | | | | | | |
| 13 | T845012000 | PALANCA DE ELEVACION | LIFT LEVER | 1 | 1 | | | | | | |
| 14 | T135012000 | LEVA | CAM | 1 | 1 | | | | | | |
| | Q151320000 | TORNILLO ALOMADO M4X6 ZINC. | CURVED SCREW M4X6 ZINC. | 2 | 2 | | | | | | |
| 15 | R010535000 | PLACA SEPARADORA | SPACER PLATE | 4 | 4 | | | | | | |
| | Q032013000 | TORNILLO ALOMADO M3X20 | CURVED SCREW M3X20 | 4 | 4 | | | | | | |
| | Q221350000 | TUERCA AUTOBLOCANTE M3 | SELF-LOCKING NUT M3 | 4 | 4 | | | | | | |
| 16 | R010534000 | INTERRUPTOR PUERTA | DOOR SWITCH | 2 | 2 | | | | | | |
| 17 | T113010000 | MOTOR CHIMENEA | FLUEPIPE MOTOR | 1 | 1 | | | | | | ELIMINADO 01.02.11 |
| 17 | T843011000 | MOTOR CHIMENEA A GAS | FLUEPIPE MOTOR | 1 | 1 | | | | | | INTRODUCIDO 01.02.11 |
| | Q042031000 | TORNILLO AVELLANADO M5x10 | COUNTERSUNK SCREW M.5x15 | 3 | 3 | | | | | | |
| | | | | | | | | | | | |

| MOD. | HORNOS / OVEN | ZONA / ZONE | CHIMENEA / CHIMNEY | PLANO DIAGRAM | C-2783 |
|---|---|---|---|---|---|

| ITEM | CODIGO CODE | DENOMINACION | NAME | VG-101 | VPG-101 | | | | | | NOTAS |
|---|---|---|---|---|---|---|---|---|---|---|---|
| 18 | T845011000 | ESCUADRA AMARRE MOTOR | MOTOR FASTENING BRACKET | 1 | 1 | | | | | | |
| | Q232040000 | ARANDELA A6 | FLAT WASHER A.6 | 4 | 4 | | | | | | |
| | Q242040000 | ARANDELA ABANICO A6 A.304 | FAN SHAPED WASHER A.6 | 4 | 4 | | | | | | |
| | Q162040000 | TUERCA EXAGONAL M6 | HEXAGONAL NUT M.6 | 4 | 4 | | | | | | |
| 19 | T845025000 | SOPORTE AMARRE MOTOR | TIE BRACKET MOTOR | 1 | 1 | | | | | | |
| 20 | T135044000 | EJE DE RETENCION DE VAPORES | VAPOR CHECK SHAFT | 1 | 1 | | | | | | |

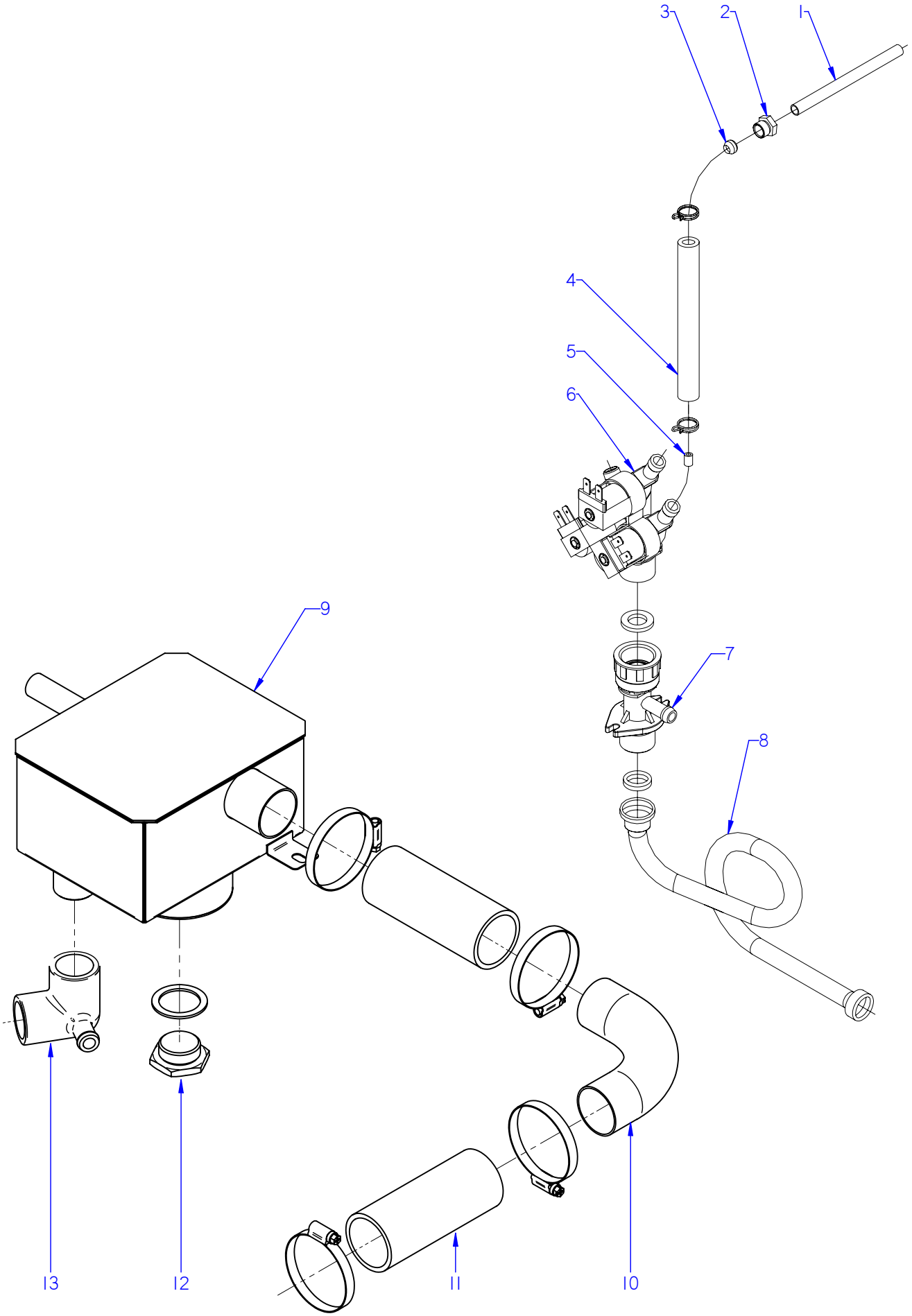


ITEM MARCADO EN COLOR = REPUESTO RECOMENDADO
COLOURED ITEM = RECOMMENDED SPARE PART

| N plano | Firma | Fecha | Aparato | Lamina | |
|---|---|---|---|---|---|
| C-2784 | | 2011-01 | CONDUCCIONES DE AGUA / WATER PIPES<br>HORNOS COG-061 / 101 / VG-101 | 7 | Fagor Industrial S.Coop. FAGOR<br>Oñate |

| MOD. | HORNOS / OVEN | ZONA / ZONE | CONDUCCIONES DE AGUA / WATER PIPES | PLANO DIAGRAM | C-2784 |
|---|---|---|---|---|---|

| ITEM | CODIGO CODE | DENOMINACION | NAME | COG-601 | COG-101 | VG-101 | | | | | NOTAS |
|---|---|---|---|---|---|---|---|---|---|---|---|
| 1 | R695033000 | TUBO INYECTOR 6/11 | INJECTOR PIPE 6/11 | 1 | 1 | 1 | | | | | |
| 2 | R695003000 | MANGUITO CIERRE | CLOSING SLEEVE | 1 | 1 | 1 | | | | | |
| 3 | R695004000 | BICONO | BICONE | 1 | 1 | 1 | | | | | |
| 4 | 3676900000 | TUBO GOMA NEGRA Ø17*10 | BLACK RUBBER PIPE Ø17*10 | 1 | 1 | 1 | | | | | |
| | Q901310000 | ABRAZADERA ELASTICA 16.8-17.7 | ELASTIC CLAMP 16.8-17.7 | 2 | 2 | 2 | | | | | |
| 5 | R665041000 | REGULADOR 0,25L ROJO | 0.25 L RED REGULATOR | 1 | 1 | 1 | | | | | |
| 6 | Z701135000 | E.V.SIMP.220V COD.255.208 | E.V.SIMP.220V COD.255.208 | 1 | 1 | _ | | | | | |
| 6 | Z611123000 | ELECTR. TRIPLE COD.255.641 | TRIPLE SOLENOID VALVE 255.6 | _ | _ | 1 | | | | | |
| 7 | T645006000 | ENTRADA DE AGUA COMPLETA | COMPLETE WATER INLET | _ | _ | 1 | | | | | |
| | Q307031000 | JUNTA TUBO 14X24X3 | JOINT 14X24X3 | _ | _ | 2 | | | | | |
| | Q012021000 | TORNILLO EXAGONAL M4x10 A304 | HEXAGONAL BOLT M4x10 A304 | _ | _ | 2 | | | | | |
| | Q162020000 | TUERCA EXAGONAL M4 | HEXAGONAL NUT M.4º | _ | _ | 2 | | | | | |
| 8 | Z601114000 | MANGUERA ENTRADA AGUA | WATER INTAKE HOSE | 1 | 1 | 1 | | | | | |
| 9 | T835001000 | CAJA DESAGÜE COMPL. HGC | COMPL. DRAINAGE BOX G HGC | 1 | 1 | _ | | | | | |
| 9 | T845001000 | CAJA DESAGÜE COMPL. HGV | COMPL. DRAINAGE BOX G HGV | _ | _ | 1 | | | | | |
| | Q232040000 | ARANDELA A6 | WASHER A6 | 1 | 1 | 1 | | | | | |
| | Q242040000 | ARANDELA ABANICO A6 | FAN WASHER A6 | 1 | 1 | 1 | | | | | |
| | Q012042000 | TORNILLO EXAGONAL M6X15 A304 | HEXAGONAL BOLT M6X15 A304 | 1 | 1 | 1 | | | | | |
| 10 | T815001000 | CONDUCCIÓN DESAGÜE 6-10/11 E | DRAINAGE DUCT 6-10/11 E | 1 | 1 | 1 | | | | | ELIMINADO 02.05.11 |
| 11 | 3715800000 | TUBO SILICONA ALTA Tª Ø43*57 | HIGH SILICON PIPE Tª Ø43*57 | 2 | 2 | 2 | | | | | ELIMINADO 02.05.11 |
| | Q901312000 | ABRAZADERA ELASTI. Ø50,6-53,2 | ELAST. CLAMP Ø50,6-53,2 | 4 | 4 | 4 | | | | | |
| 12 | T305052000 | TAPÓN DESAGÜE | DRAINING PLUG | 1 | 1 | 1 | | | | | |
| | T305053000 | JUNTA DESAGÜE | DRAINAGE BOARD | 1 | 1 | 1 | | | | | |
| 13 | R665080000 | CODO DESAGUE | DRAIN ELBOW | 1 | 1 | 1 | | | | | |
| | | | | | | | | | | | |
| | | | | | | | | | | | |
| | | | | | | | | | | | |
| | | | | | | | | | | | |
| | | | | | | | | | | | |
| | | | | | | | | | | | |
| | | | | | | | | | | | |

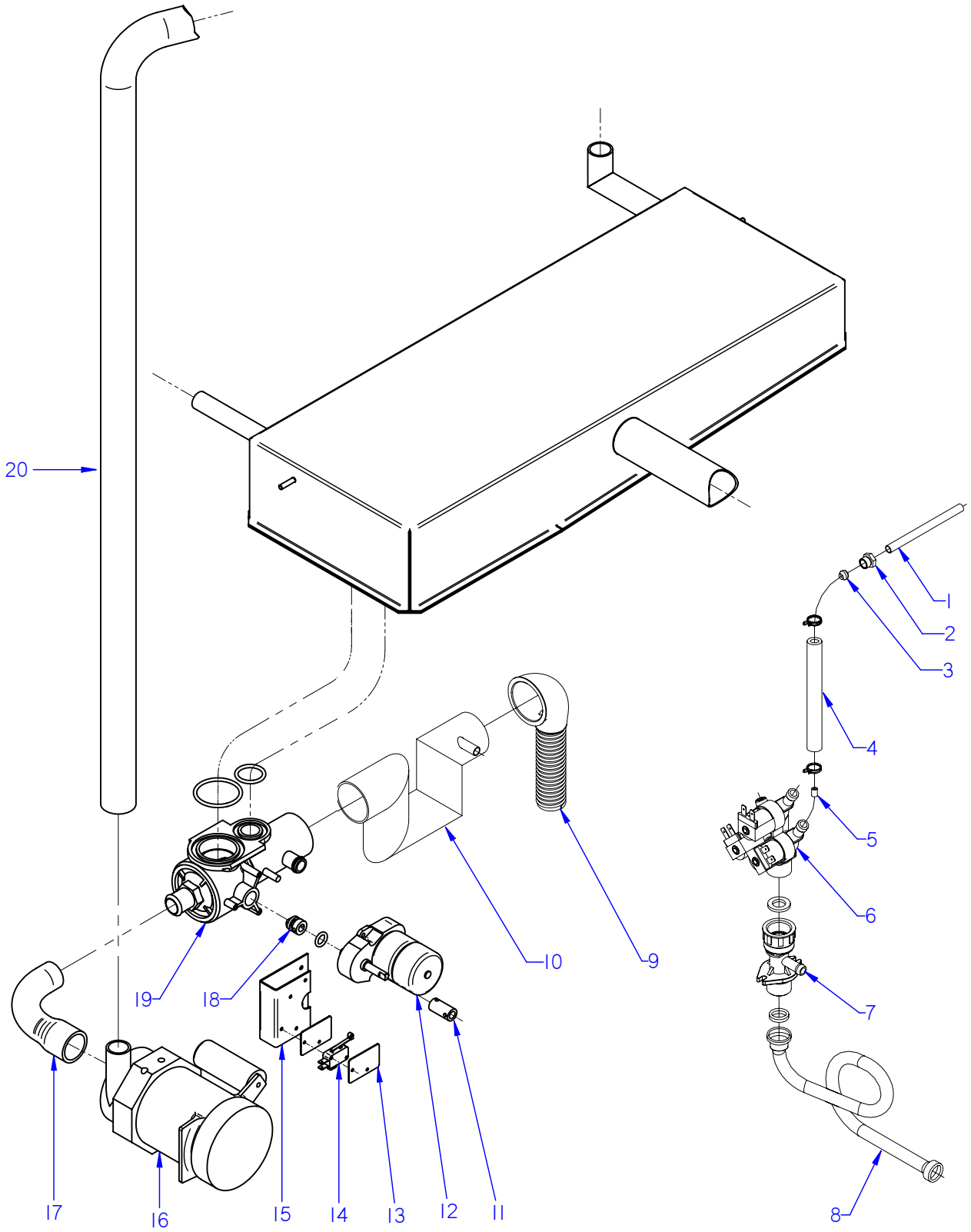


ITEM MARCADO EN COLOR = REPUESTO RECOMENDADO
COLOURED ITEM = RECOMMENDED SPARE PART

| N plano | Firma | Fecha | Aparato | Lamina | |
|---|---|---|---|---|---|
| C-2785 | | 2011-01 | CONDUCCIONES DE AGUA / WATER PIPES<br>HORNOS VPG-101 | 8 | Fagor Industrial S.Coop. FAGOR<br>Oñate |

| MOD. | HORNOS / OVEN | ZONA / ZONE | CONDUCCIONES DE AGUA / WATER PIPES | PLANO DIAGRAM | C-2785 |
|---|---|---|---|---|---|

| ITEM | CODIGO CODE | DENOMINACION | NAME | VPG-101 | | | | | | | NOTAS |
|---|---|---|---|---|---|---|---|---|---|---|---|
| **S/Nº** | **1100003163** | **KIT VALVULA DE LAVADO COMP.** | **WASHING VALVE KIT** | **1** | | | | | | | |
| 1 | R695033000 | TUBO INYECTOR 6/11 | INJECTOR PIPE 6/11 | 1 | | | | | | | |
| 2 | R695003000 | MANGUITO CIERRE | CLOSING SLEEVE | 1 | | | | | | | |
| 3 | R695004000 | BICONO | BICONE | 1 | | | | | | | |
| 4 | 3676900000 | TUBO GOMA NEGRA Ø17*10 | BLACK RUBBER PIPE Ø17*10 | 1 | | | | | | | |
| | Q901310000 | ABRAZADERA ELASTICA 16.8-17.7 | ELASTIC CLAMP 16.8-17.7 | 1 | | | | | | | |
| 5 | R665041000 | REGULADOR 0,25L ROJO | 0.25 L RED REGULATOR | 1 | | | | | | | |
| 6 | Z611123000 | ELECTR. TRIPLE COD.255.641 | TRIPLE SOLENOID VALVE 255.6 | 1 | | | | | | | |
| 7 | T645006000 | ENTRADA DE AGUA COMPLETA | COMPLETE WATER INLET | 1 | | | | | | | |
| | Q307031000 | JUNTA TUBO 14X24X3 | JOINT 14X24X3 | 2 | | | | | | | |
| 8 | Z601114000 | MANGUERA ENTRADA AGUA | WATER INTAKE HOSE | 1 | | | | | | | |
| 9 | Z200910000 | MANGUERA DESAGUE | DRAINAGE HOSE | 1 | | | | | | | |
| 10 | T360718000 | SIFON SALIDA VALVULA | VALVE OUTPUT SIPHON | 1 | | | | | | | |
| | Q881307000 | ABRAZADERA 40-60 | CLAMP 40-60 | 1 | | | | | | | |
| 11 | T330733000 | CASQUILLO MOTOR MICRO | MICRO MOTOR BUSHING | 1 | | | | | | | |
| | Q151320000 | TORNILLO ALOMADO M4X6 H.ZIN. | CURVED SCREW M4X6 H.ZIN. | 2 | | | | | | | |
| | Q371026000 | MANGUITO SUJEC. 4X14 DIN1481 | HOSE FASTENING 4X14 DIN1481 | 1 | | | | | | | |
| | Q052032000 | TORNILLO ALLEN M.5x15(+) | ALLEN HEAD SCREW M.5x15(+) | 2 | | | | | | | |
| 12 | T330711000 | MOTOR VALVULA | VALVE MOTOR | 1 | | | | | | | |
| | Q042022000 | TORNILLO AVELLANADO M4X15 | COUNTERSUNK SCREW M.4x15 | 2 | | | | | | | |
| 13 | R010535000 | PLACA SEPARADORA | SPACER PLATE | 4 | | | | | | | |
| | Q032013000 | TORNILLO ALOMADO M3X20 | CURVED SCREW M3X20 | 4 | | | | | | | |
| | Q221350000 | TUERCA AUTOBLOCANTE M3 | SELF-LOCKING NUT M3 | 4 | | | | | | | |
| 14 | R010534000 | INTERRUPTOR PUERTA | DOOR SWITCH | 2 | | | | | | | |
| 15 | T330713000 | CHAPA SUJECCION MICROS | FASTENING PLATE MICROS | 1 | | | | | | | ELIMINADO 01.03.11 |
| 15 | T330754000 | SOPORTE MICROS LAVADO | MICROS WASH STAND | 1 | | | | | | | INTRODUCIDO 01.03.11 |
| 16 | Z258976000 | MOTOBOM. ACLARADO ACC 60HZ | RINSE MOTOR PUMP ACC 60HZ | 1 | | | | | | | |
| S/Nº | T820701000 | SOPORTE MOTOBOMBA 6-10/11 | MOTOR PUMP SUPPORT 6-10/11 | 1 | | | | | | | ELIMINADO 01.03.11 |
| S/Nº | T920702000 | SOPORTE BOMBA LAVADO | WASH PUMP SUPPORT | 1 | | | | | | | INTRODUCIDO 01.03.11 |
| | Q232030000 | ARANDELA A5 | FLAT WASHER A.5 | 2 | | | | | | | |
| | Q012032000 | TORNILLO EXAGONAL M5x15 A304 | HEXAGONAL SCREW M.5x15 | 2 | | | | | | | |

| MOD. | HORNOS / OVEN | ZONA / ZONE | CONDUCCIONES DE AGUA / WATER PIPES | PLANO DIAGRAM | C-2785 |
|---|---|---|---|---|---|

| ITEM | CODIGO CODE | DENOMINACION | NAME | VPG-101 | | | | | | | NOTAS |
|---|---|---|---|---|---|---|---|---|---|---|---|
| 17 | T330731000 | GOMA VALVULA BOMBA | PUMP VALVE RUBBER | 1 | | | | | | | |
| | Q881304000 | ABRAZADERA 20-32 | CLAMP 20-32 | 1 | | | | | | | |
| | Q881305000 | ABRAZADERA 25-40 | CLAMP 25-40 | 1 | | | | | | | |
| 18 | T330707000 | PUNTA ACOPLE MOTOR A VALV. | CONN. POINT MOTOR TO VAL. | 1 | | | | | | | |
| | Q307084000 | JUNTA TORICA Ø18X3.5 | O-RING Ø18X3.5 | 1 | | | | | | | |
| 19 | T330723000 | CUERPO VALVULA COMPLETO | COMPLETE VALVE BODY | 1 | | | | | | | |
| | T330703000 | JUNTA TEFLON VALVULA | TEFLON VALVE BOARD | 2 | | | | | | | |
| | Q307080000 | JUNTA TORICA Ø52X3,5 | O-RING Ø52X3.5 | 1 | | | | | | | |
| | Q307079000 | JUNTA TORICA Ø33x3,5 | O-RING Ø33x3.5 | 1 | | | | | | | |
| 20 | 3716000000 | TUBO SILICONA Tº Ø 35*27 | HIGH SILICON PIPE Tº Ø 35*27 | 1 | | | | | | | |
| | Q881305000 | ABRAZADERA 25-40 | CLAMP 25-40 | 2 | | | | | | | |

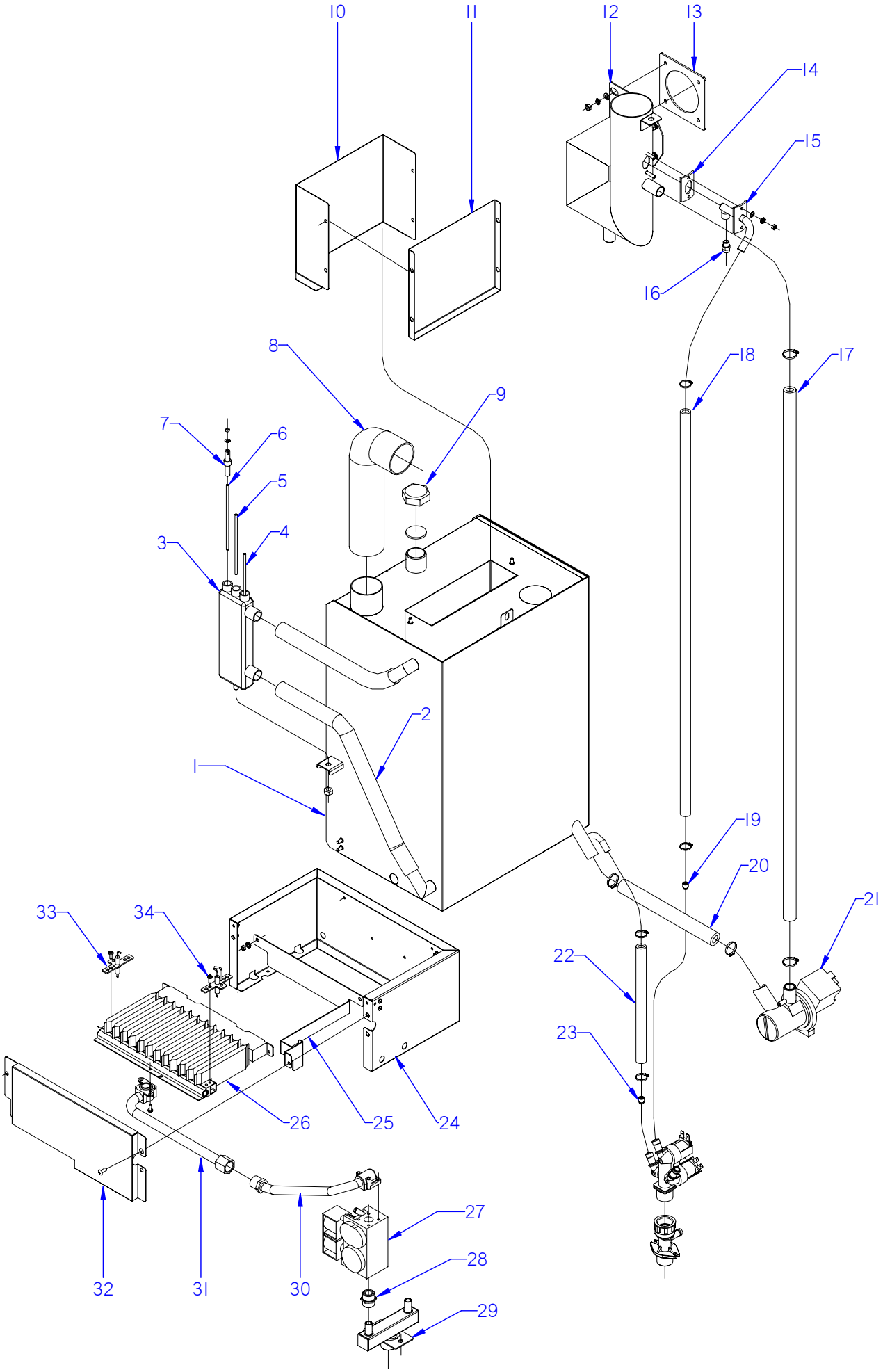


ITEM MARCADO EN COLOR = REPUESTO RECOMENDADO
COLOURED ITEM = RECOMMENDED SPARE PART

| N plano | Firma | Fecha | Aparato | | Lamina | |
|---|---|---|---|---|---|---|
| C-2786 | | 2011-01 | CIRCUITO DE VAPOR / STEAM CIRCUIT<br>HORNO VG-101 / VPG-101 | | 9 | Fagor Industrial S.Coop.<br>Onate |

| MOD. | HORNOS / OVEN | ZONA / ZONE | CIRCUITO DE VAPOR / STEAM CIRCUIT | PLANO DIAGRAM | C-2786 |
|---|---|---|---|---|---|

| ITEM | CODIGO CODE | DENOMINACION | NAME | VG-101 | VPG-101 | | | | | | NOTAS |
|---|---|---|---|---|---|---|---|---|---|---|---|
| **1** | | **KIT GENERADOR DE VAPOR 101** | **STEAM GENERATOR KIT 101** | **1** | **1** | | | | | | |
| 1 | T845006000 | GENERADOR VAPOR 6-10-20/11G | STEAM GENERATOR 6-10-20/11G | 1 | 1 | | | | | | |
| S/Nº | Z956104000 | INYECTOR 1.1 A-15009 GN | 1.1 A-15 009 INJECTOR GN | 12 | 12 | | | | | | |
| 2 | 3715900000 | TUBO SILICONA ALTA Tª Ø26*18 | HIGH SILICON PIPE Tª Ø26*18 | 2 | 2 | | | | | | |
| | Q901312000 | ABRAZADERA ELASTI. Ø50,6-53,2 | ELAST. CLAMP Ø50,6-53,2 | 4 | 4 | | | | | | |
| 3 | T325079000 | BOTE DE NIVELES | LEVELS VESSEL | 1 | 1 | | | | | | |
| | Q228051000 | TUERCA EXAGONAL M8 PLASTICO | HEXAGONAL NUT M8 PLASTIC | 1 | 1 | | | | | | |
| 4 | R345063000 | ELECTRODO DE NIVEL BAJO | LOW LEVEL ELECTRODE | 1 | 1 | | | | | | |
| 5 | R345060000 | ELECTRODO DE NIVEL ALTO | HIGH LEVEL ELECTRODE | 1 | 1 | | | | | | |
| 6 | R345064000 | ELECTRODO DE MASA | EARTH ELECTRODE | 1 | 1 | | | | | | |
| 7 | R345069000 | GUIA AISLANTE | INSULATION GUIDE | 3 | 3 | | | | | | |
| 8 | T722608000 | TUBO FLEXIBLE Ø53X360 | FLEXIBLE TUBE Ø53X360 | 1 | 1 | | | | | | |
| | Q881307000 | ABRAZADERA 40*60 | CLAMP 40*60 | 2 | 2 | | | | | | |
| 9 | R015010000 | TUERCA TAPON 1" | PLUG NUT 1" | 1 | 1 | | | | | | |
| | R015011000 | ARANDELA Ø32 | WASHER Ø32 | 1 | 1 | | | | | | |
| 10 | T845027000 | POSTER. CHIMENEA GENERADOR | REAR FLUEPIPE GENERATOR | 1 | 1 | | | | | | |
| 11 | T845028000 | ANTER. CHIMENEA GENERADOR | FRONT FLUEPIPE GENERATOR | 1 | 1 | | | | | | |
| | Q412002000 | REMACHE TUBULAR Ø4x7,5 | TUBULAR RIVET Ø4x7.5 | 12 | 12 | | | | | | |
| 12 | T845013000 | RETORNO COMPLETO 1011 | COMPLETE RETURN 1011 | 1 | 1 | | | | | | |
| | Q232040000 | ARANDELA A6 | WASHER A6 | 4 | 4 | | | | | | |
| | Q262040000 | ARANDELA GROWER A6 | WASHER GROWER A6 | 4 | 4 | | | | | | |
| | Q162040000 | TUERCA EXAGONAL M6 | HEXAGONAL NUT M6 | 4 | 4 | | | | | | |
| 13 | R725052000 | JUNTA COLECT | COLLECTOR SEAL | 1 | 1 | | | | | | |
| 14 | R725159000 | JUNTA TUBO INYECTOR | INJECTOR PIPE SEAL | 1 | 1 | | | | | | |
| 15 | T115112000 | CONDUCCION DE VAHOS COMPL. | COMPL. VAPOUR DUCT | 1 | 1 | | | | | | |
| 16 | T115086000 | TOBERA 1/8" | NOZZLE 1/8 | 1 | 1 | | | | | | |
| | Q242030000 | ARANDELA ABANICO A5 A.304 | FAN WASHER A5 A.304 | 2 | 2 | | | | | | |
| | Q162030000 | TUERCA EXAGONAL M5 | HEXAGONAL NUT M5 | 2 | 2 | | | | | | |
| 17 | 3715900000 | TUBO SILICONA ALTA Tª Ø26*18 | HIGH SILICON PIPE Tª Ø26*18 | 1 | 1 | | | | | | |
| | Q901311000 | ABRAZADERA ELASTI. Ø26,7-28,1 | ELAST. CLAMP Ø26.7-28.1 | 2 | 2 | | | | | | |
| | | | | | | | | | | | |

| MOD. | HORNOS / OVEN | ZONA / ZONE | CIRCUITO DE VAPOR / STEAM CIRCUIT | PLANO DIAGRAM | C-2786 |
|---|---|---|---|---|---|

| ITEM | CODIGO CODE | DENOMINACION | NAME | VG-101 | VPG-101 | | | | | | NOTAS |
|---|---|---|---|---|---|---|---|---|---|---|---|
| 18 | 3702500000 | TUBO GOMA NEGRA Ø17xØ11 | BLACK RUBBER PIPE Ø17*11 | 1 | 1 | | | | | | |
| | Q901310000 | ABRAZADERA ELASTI. Ø16,8-17,7 | ELAST. CLAMP Ø16.8-17.7 | 2 | 2 | | | | | | |
| 19 | P443042000 | REGULADOR 3L VERDE 254.023 | REGULATOR 3L GREEN 254.023 | 1 | 1 | | | | | | |
| 20 | 3715900000 | TUBO SILICONA ALTA Tª Ø26*18 | HIGH SILICON PIPE Tª Ø26*18 | 1 | 1 | | | | | | |
| | Q901311000 | ABRAZADERA ELASTI. Ø26,7-28,1 | ELAST. CLAMP Ø26.7-28.1 | 2 | 2 | | | | | | |
| 21 | Z220901000 | BOMBA DESAGUE 30W | DRAINAGE PUMP 30W | 1 | 1 | | | | | | |
| 21 | Z223501000 | BOMBA DE DESAGUE 30W 60HZ | DRAINAGE PUMP 30W 60HZ | 1 | 1 | | | | | | |
| 22 | 3676900000 | TUBO GOMA NEGRA Ø17xØ10 | BLACK RUBBER PIPE Ø17*10 | 1 | 1 | | | | | | |
| | Q901310000 | ABRAZADERA ELASTI. Ø16,8-17,7 | ELAST. CLAMP Ø16.8-17.7 | 2 | 2 | | | | | | |
| 23 | Z601156000 | REGULADOR 8L RO. 254.034 | REGULATOR 8L RED 254.034 | 1 | 1 | | | | | | |
| 24 | T305704000 | CAJA QUEMADOR | BURNER BOX | 1 | 1 | | | | | | |
| 25 | T305706000 | ESCUADRA AMARRE QUEMADOR | TIE BRACKET BURNER | 1 | 1 | | | | | | |
| 26 | Z955801000 | QUEMADOR F0000161 | BURNER F0000161 | 1 | 1 | | | | | | |
| | Q032021000 | TORNILLO ALOMADO M4X10 | CURVED SCREW M4X10 | 2 | 2 | | | | | | |
| | Q242020000 | ARANDELA ABANICO A4 | FAN WASHER A4 | 2 | 2 | | | | | | |
| | Q162020000 | TUERCA EXAGONAL M4 | HEXAGONAL NUT M4 | 2 | 2 | | | | | | |
| 27 | Z952201000 | VALVULA SIT 830.034 50 Hz | VALVE SIT 830.034 50 Hz | 1 | 1 | | | | | | |
| 27 | Z953501000 | VALVULA SIT 830.062 60 Hz | VALVE SIT 830.062 60 Hz | 1 | 1 | | | | | | |
| | R723016000 | JUNTA CON. 830 960.108 | SEAL CON. 830 960.108 | 1 | 1 | | | | | | |
| 28 | S205023000 | MANGUITO DOBLE 1/2 | DOUBLE SLEEVE 1/2 | 1 | 1 | | | | | | |
| | Q221334000 | TUERCA 1/2" | NUT 1/2" | 2 | 2 | | | | | | |
| | U055043000 | BICONO Ø12 | BICONE Ø12 | 2 | 2 | | | | | | |
| 29 | T845019000 | ENTRADA DE GAS COMP HGV P | COMP GAS INPUT HGV P | 1 | 1 | | | | | | |
| | Q232040000 | ARANDELA A6 | WASHER A6 | 2 | 2 | | | | | | |
| | Q242040000 | ARANDELA ABANICO A6 A.304 | FAN WASHER A6 A.304 | 2 | 2 | | | | | | |
| | Q012042000 | TORNILLO EXAGONAL M6X15 | HEXAGONAL BOLT M6x15 | 2 | 2 | | | | | | |
| 30 | T305090000 | TUBO DE GAS FLEXIBLE 300-90º | FLEXIBLE GAS PIPE 300-90 º | 1 | 1 | | | | | | |
| 31 | T305718500 | ACOPLADOR COMPL. PINTADO | PAINTED COMPL. COUPLER | 1 | 1 | | | | | | |
| | Z955807000 | JUNTA CORCHO | CORK SEAL | 1 | 1 | | | | | | |
| 32 | T305705000 | TAPA CAJA | BOX COVER | 1 | 1 | | | | | | |
| | | | | | | | | | | | |

| MOD. | HORNOS / OVEN | ZONA / ZONE | CIRCUITO DE VAPOR / STEAM CIRCUIT | PLANO DIAGRAM | C-2786 |
|---|---|---|---|---|---|

| ITEM | CODIGO CODE | DENOMINACION | NAME | VG-101 | VPG-101 | | | | | | NOTAS |
|---|---|---|---|---|---|---|---|---|---|---|---|
| 32 | T305705000 | TAPA CAJA | BOX COVER | 1 | 1 | | | | | | |
| 33 | Z955803000 | ELECTRODO DETECCION F1643600 | DETECTION ELECTRODE F16436 | 1 | 1 | | | | | | |
| | Q151320000 | TOR. ALOMADO M4X6 H. ZINCADO | CURVED SCREW M4X6 H. ZINC-C | 1 | 1 | | | | | | |
| 34 | Z955802000 | ELECTRODO IGNICION F1643500 | IGNITION ELECTRODE F1643500 | 1 | 1 | | | | | | |
| | Q151320000 | TOR. ALOMADO M4X6 H. ZINCADO | CURVED SCREW M4X6 H. ZINC-C | 1 | 1 | | | | | | |

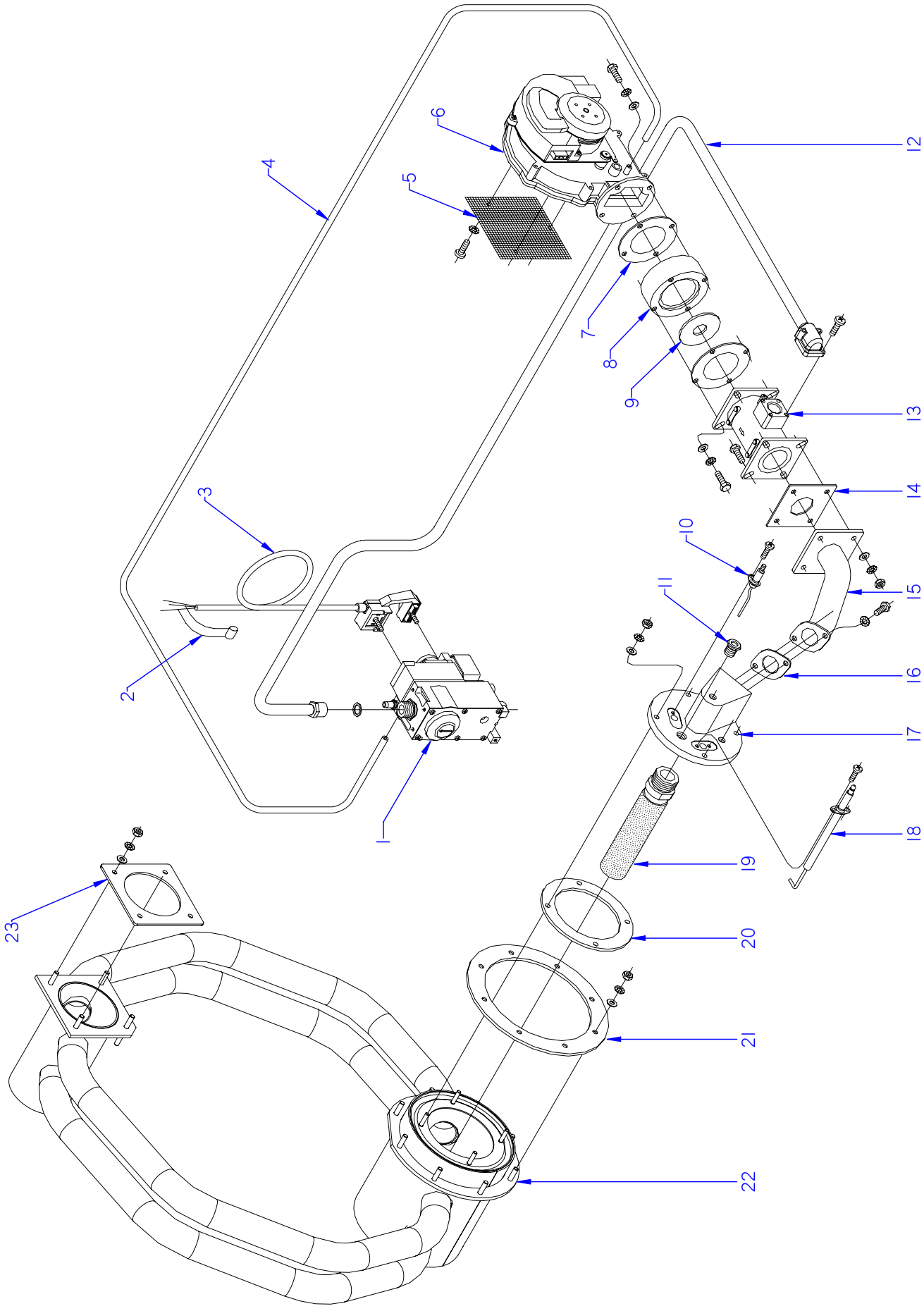


ITEM MARCADO EN COLOR = REPUESTO RECOMENDADO
COLOURED ITEM = RECOMMENDED SPARE PART

| N plano | Firma | Fecha | Aparato | Lamina | |
|---|---|---|---|---|---|
| C-2787 | | 2011-01 | PARTE FUNCIONAL GAS / FUNCTIONAL PART GAS<br>HORNOS COG / VG / VPG-061/101 | 10 | Fagor Industrial S.Coop.<br>Oñate |

| MOD. | HORNOS / OVEN | ZONA / ZONE | PARTE FUNCIONAL GAS<br>FUNCTIONAL PART GAS | PLANO<br>DIAGRAM | C-2787 |
|---|---|---|---|---|---|

| ITEM | CODIGO<br>CODE | DENOMINACION | NAME | COG-061 | COG-101 | VG-101 | VPG-101 | | | | NOTAS |
|---|---|---|---|---|---|---|---|---|---|---|---|
| 1 | T085010000 | VALVULA REGUL. BP 50 Hz 6/11 | CONTROL VALVE BP 50 Hz 6/11 | 1 | _ | _ | _ | | | | |
| 1 | T085011000 | VALVULA REGUL. GN 50 Hz 6/11 | CONTROL VALVE GN 50 Hz 6/11 | 1 | _ | _ | _ | | | | |
| 1 | T085016000 | VALVULA REGUL. BP 60 Hz 6/11 | CONTROL VALVE BP 60 Hz 6/11 | 1 | _ | _ | _ | | | | |
| 1 | T085017000 | VALVULA REGUL. GN 60 Hz 6/11 | CONTROL VALVE GN 60 Hz 6/11 | 1 | _ | _ | _ | | | | |
| 1 | T115097000 | VALVULA REGUL. BP 50 Hz 10/11 | CONTROL VALVE BP 50 Hz 10/11 | _ | 1 | 1 | 1 | | | | |
| 1 | T115098000 | VALVULA REGUL. GN 50 Hz 10/11 | CONTROL VALVE GN 50 Hz10/11 | _ | 1 | 1 | 1 | | | | |
| 1 | T115100000 | VALVULA REGUL. BP 60 Hz 10/11 | CONTROL VALVE BP 60 Hz 10/11 | _ | 1 | 1 | _ | | | | |
| 1 | T115101000 | VALVULA REGUL. GN 60 Hz 10/11 | CONTROL VALVE GN 60 Hz 10/11 | _ | 1 | 1 | _ | | | | |
| S/Nº | R723013000 | CONEXION VALVULA 960.107 | VALVE CONNECTION 960,107 | _ | _ | 1 | 1 | | | | INTRODUCIDO 15.01.11 |
| | R723016000 | JUNTA CONEXION 830 960.108 | CONNECTI. BOARD 830 960 108 | _ | _ | 1 | 1 | | | | INTRODUCIDO 15.01.11 |
| 2 | Z233012000 | CONDENSADOR ANTIPARASITARIO | ANTIPARASITIC CONDENSOR | 1 | 1 | 3 | 3 | | | | |
| 3 | T085012000 | CONECTOR VALVULA HONEYW. | HONEYW. VALVE CONNECTOR | 1 | 1 | 1 | 1 | | | | |
| 4 | 3702500000 | TUBO GOMA NEGRO Ø 7*11 | BLACK RUBBER PIPE Ø 7*11 | 1 | 1 | 1 | 1 | | | | |
| 5 | T115095000 | MALLA VENTILADOR | FAN GRILLE | 1 | 1 | 1 | 1 | | | | |
| | Q032021000 | TORNILLO ALOMADO M4X10 | CURVED SCREW M4X10 | 4 | 4 | 4 | 4 | | | | |
| | Q242020000 | ARANDELA ABANICO A4 | FAN WASHER A4 | 4 | 4 | 4 | 4 | | | | |
| 6 | T083000000 | VENTILADOR E.B.M.-RG130 | FAN E.B.M.-RG130 | 1 | 1 | 1 | 1 | | | | |
| 7 | T115081000 | JUNTA ACOPLAMIENT. SOPLANTE | BLOWER COUPLING SEAL | 2 | 2 | 2 | 2 | | | | |
| 8 | T115076000 | ACOPLAMIEN. VENTILADOR MIXER | MIXER FAN COUPLING | 1 | 1 | 1 | 1 | | | | |
| 9 | T085018000 | ARANDELA VENTILAD. MIXER Ø14 | MIXER FAN WASHER Ø14 | 1 | _ | _ | _ | | | | |
| 9 | T845703000 | ARANDELA VENTILAD. MIXER Ø19 | MIXER FAN WASHER Ø19 | _ | 1 | 1 | 1 | | | | |
| 10 | T115712000 | ELECTRODO DETECCI. 6/101/102 | DETECTION ELECTRODE 6/101/1 | 1 | 1 | 1 | 1 | | | | |
| | Q153021000 | TORNILLO ALOMADO M4 X 10 | CURVED SCREW M4 X 10 | 2 | 2 | 2 | 2 | | | | |
| 11 | R725015000 | VISOR DE ENCENDIDO | IGNITION WINDOW | 1 | 1 | 1 | 1 | | | | |
| | R725063000 | CRISTAL DE VISOR | WINDOW GLASS | 1 | 1 | 1 | 1 | | | | |
| 12 | T305092000 | TUBO DE GAS FLEXIBLE 1300-90º | FLEXIBLE GAS PIPE 300-90 º | 1 | 1 | 1 | 1 | | | | |
| 13 | T085007000 | MIXER SIT 25KW | MIXER SIT 25KW | 1 | _ | _ | _ | | | | |
| 13 | T115075000 | MIXER SIT 35KW | MIXER SIT 35KW | _ | 1 | 1 | 1 | | | | |
| 14 | T115079000 | JUNTA MIXER | MIXER SEAL | 1 | 1 | 1 | 1 | | | | |
| 15 | T115077000 | CONDUCTO GAS TAPA PRINCIPAL | MAIN COVER GAS PIPE | 1 | 1 | 1 | 1 | | | | |
| | | | | | | | | | | | |

| MOD. | HORNOS / OVEN | ZONA / ZONE | PARTE FUNCIONAL GAS<br>FUNCTIONAL PART GAS | PLANO<br>DIAGRAM | C-2787 |
|---|---|---|---|---|---|

| ITEM | CODIGO<br>CODE | DENOMINACION | NAME | COG-061 | COG-101 | VG-101 | VPG-101 | | | | NOTAS |
|---|---|---|---|---|---|---|---|---|---|---|---|
| 16 | T095021000 | JUNTA CONDUCTO | PIPE SEAL | 1 | 1 | 1 | 1 | | | | |
| | Q012032000 | TORNILLO EXAGONAL M5X15 A304 | HEXAGONAL BOLT M5x15 A304 | 2 | 2 | 2 | 2 | | | | |
| | Q242030000 | ARANDELA ABANICO A5 A.304 | FAN WASHER A5 A.304 | 2 | 2 | 2 | 2 | | | | |
| 17 | T085715000 | TAPA PRINCIPAL 6/11 | MAIN COVER 6/11 | 1 | _ | _ | _ | | | | |
| 17 | T115782000 | TAPA PRINCIPAL | MAIN COVER | _ | 1 | 1 | 1 | | | | |
| | Q242030000 | ARANDELA ABANICO A5 A.304 | FAN WASHER A5 A.304 | 4 | 4 | 4 | 4 | | | | |
| | Q163030000 | TUERCA EXAGONAL M5 LATON | HEXAGONAL NUT M5 BRASS | 4 | 4 | 4 | 4 | | | | |
| 18 | T085714000 | ELECTRODO IGNICION 6/11 | IGNITION ELECTRODE 6/11 | 1 | _ | _ | _ | | | | |
| 18 | T115781000 | ELECTRODO IGNICION 10/11-10/21 | IGNITION ELECTRODE 10/11-10/2 | _ | 1 | 1 | 1 | | | | |
| | Q153021000 | TORNILLO ALOMADO M4 X 10 | CURVED SCREW M4 X 10 | 1 | 1 | 1 | 1 | | | | |
| 19 | T085710000 | QUEMADOR FURIGAS 6/11 | BURNER FURIGAS 6/11 | 1 | _ | _ | _ | | | | |
| 19 | T115710000 | QUEMADOR FURIGAS 20/11 | BURNER FURIGAS 20/11 | _ | 1 | 1 | 1 | | | | |
| 20 | T075013000 | JUNTA DE TAPA PRINCIPAL | MAIN COVER SEAL | 1 | _ | _ | _ | | | | |
| 20 | R725055000 | JUNTA DE TAPA PRINCIPAL | MAIN COVER SEAL | _ | 1 | 1 | 1 | | | | |
| 21 | T075014000 | JUNTA CAMARA COMBUS. 6/11 | FUEL CHAMBER SEAL 6/11 | 1 | _ | _ | _ | | | | |
| 21 | R725051000 | JUNTA CAMARA COMBUS. 101/102 | FUEL CHAMBER SEAL 101/102 | _ | 1 | 1 | 1 | | | | |
| 22 | T935701000 | CAMARA COMBUSTION 061 | COMBUSTION CHAMBER 061 | 1 | _ | _ | | | | | |
| 22 | T015700000 | CAMARA COMBUSTION 10-11 | COMBUSTION CHAMBER 10-11 | _ | 1 | _ | | | | | |
| 22 | R725701000 | INTERCAMBIADOR 10/11/21 | HEAT EXCHANGER 10/11/21 | _ | _ | 1 | 1 | | | | |
| | Q232040000 | ARANDELA A6 | WASHER A6 | 8 | 8 | 8 | 8 | | | | |
| | Q262040000 | ARANDELA GROW. A6 A.304 | WASHER GROW. A6 A.304 | 8 | 8 | 8 | 8 | | | | |
| | Q163040000 | TUERCA EXAGONAL M6 LATON | HEXAGONAL NUT M6 BRASS | 8 | 8 | 8 | 8 | | | | |
| 23 | R725052000 | JUNTA COLECTOR | MANIFOLD SEAL | _ | _ | 1 | 1 | | | | |
| | Q232040000 | ARANDELA A6 | WASHER A6 | _ | _ | 4 | 4 | | | | |
| | Q242040000 | ARANDELA ABANICO A6 | FAN WASHER A6 | _ | _ | 4 | 4 | | | | |
| | Q162040000 | TUERCA EXAGONAL M6 | HEXAGONAL NUT M6 | _ | _ | 4 | 4 | | | | |
| | | | | | | | | | | | |
| | | | | | | | | | | | |
| | | | | | | | | | | | |
| | | | | | | | | | | | |
| | | | | | | | | | | | |

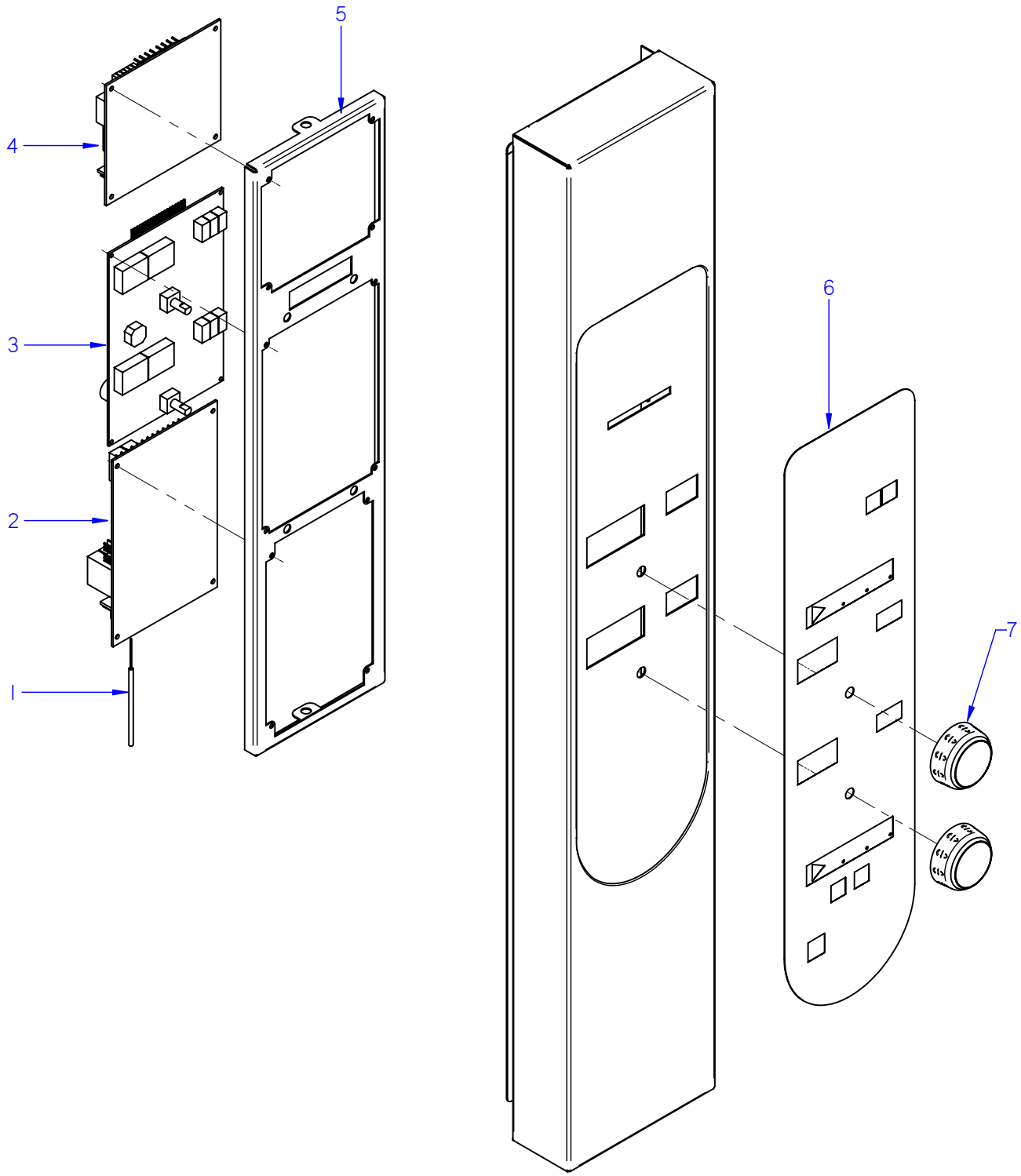


ITEM MARCADO EN COLOR = REPUESTO RECOMENDADO
COLOURED ITEM = RECOMMENDED SPARE PART

| N plano | Firma | Fecha | Aparato CONJUNTO ELECTR. PORTAMANDOS / CONTROL HOLDER ELECTRIC UNIT | Lamina | |
|---|---|---|---|---|---|
| C-2788 | | 2011-01 | HORNOS COG-061 / 101 | 11 | Fagor Industrial S.Coop. FAGOR Oñate |

| MOD. | HORNOS / OVEN | ZONA | CONJUNTO ELECTRICO PORTAMANDOS / CONTROL HOLDER ELECTRIC UNIT | PLANO | C-2788 |
|---|---|---|---|---|---|

| ITEM | CODIGO | DENOMINACION | TEXTO | COG-061 | COG-101 | | | | | | NOTAS |
|---|---|---|---|---|---|---|---|---|---|---|---|
| 1 | T323011000 | CONJUN. TERMOPAR CAMARA (K) | CHAMBER THERMOCOUPLE UNI | 1 | 1 | | | | | | |
| 2 | T553003000 | TARJETA CONTROL DE CAMARA | CHAMBER CONTROL CARD | 1 | 1 | | | | | | |
| | Q221023000 | CLIP SUJECIÓN RÁPIDA Ø 4 | RAPID CONNECT CLIP Ø 4 | 8 | 8 | | | | | | |
| 3 | T533001000 | TARJETA PORTAMANDOS HEI-HGC | CONTROL PANEL CARD | 1 | 1 | | | | | | |
| 4 | T553004000 | TARJETA CONTROL DE GAS | CONTROL CARD GAS | 1 | 1 | | | | | | |
| 5 | T932802000 | SOPORTE PROGRAMADOR | PROGRAM. SUPPORT | 1 | 1 | | | | | | |
| | T732802000 | DISTANCIAD. COMPONENTES 7mm | SPACER 7mm | 4 | 4 | | | | | | |
| 6 | T933002000 | SERIGRAFIA HGC 20/11 | SERIGRAPHY HGC 20/11 | 1 | 1 | | | | | | |
| 7 | T903007000 | BOTON DE MANDO | CONTROL BUTTON | 2 | 2 | | | | | | |

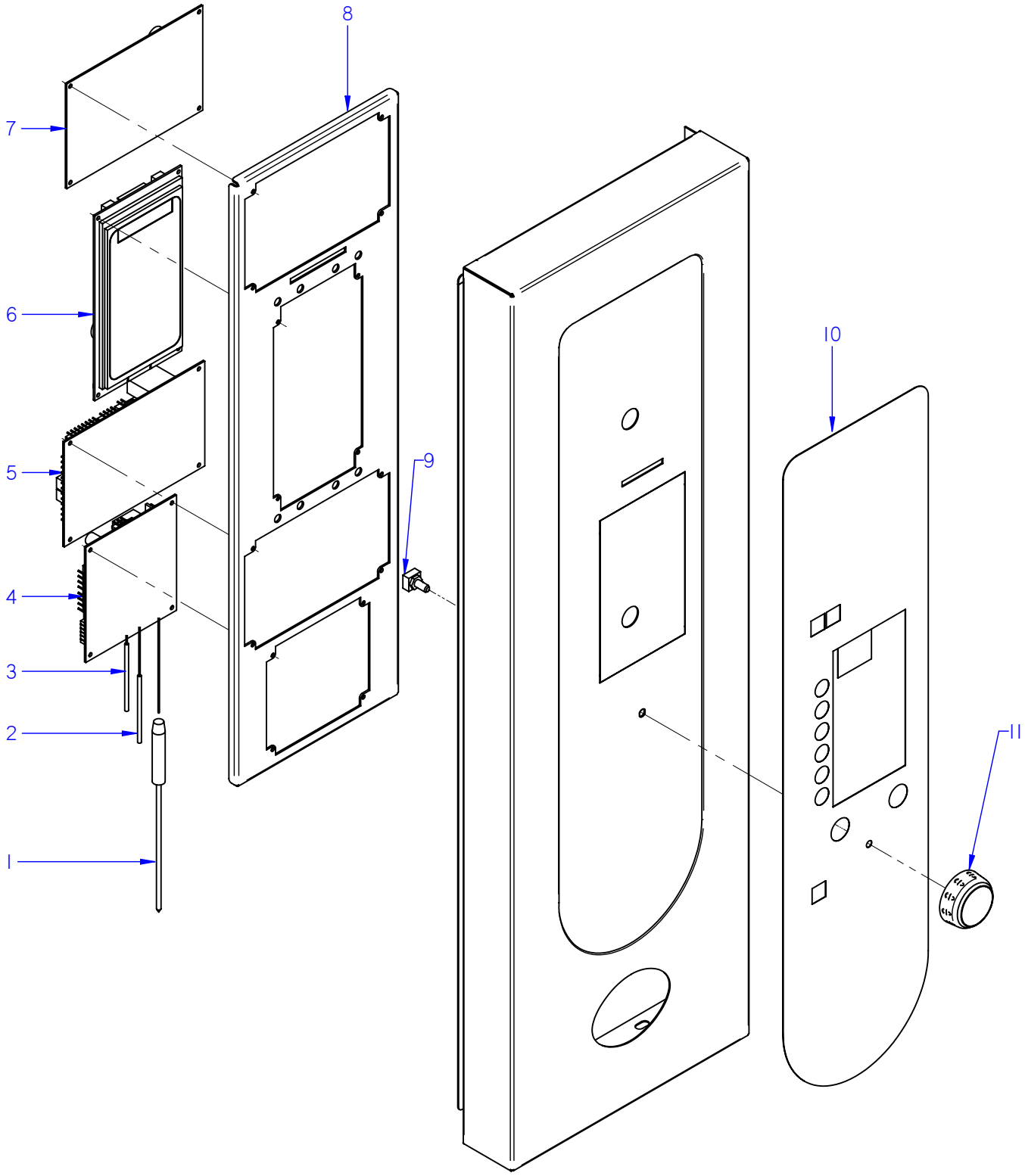


ITEM MARCADO EN COLOR = REPUESTO RECOMENDADO
COLOURED ITEM = RECOMMENDED SPARE PART

| N plano | Firma | Fecha | Aparato | Lamina | |
|---|---|---|---|---|---|
| C-2789 | | 2011-01 | CONJUNTO ELECTRICO PORTAMANDOS<br>HORNOS VG-101 | 12 | Fagor Industrial S.Coop.<br>Oñate |

| MOD. | HORNOS / OVEN | ZONA | CONJUNTO ELECTRICO PORTAMANDOS / CONTROL HOLDER ELECTRIC UNIT | PLANO | C-2789 |
|---|---|---|---|---|---|

| ITEM | CODIGO | DENOMINACION | TEXTO | VG-101 | | | | | | | NOTAS |
|---|---|---|---|---|---|---|---|---|---|---|---|
| 1 | T623005000 | CONJUNTO SONDA PARA NUCLEO | PROBE UNIT FOR CORE | 1 | | | | | | | |
| 2 | T323011000 | CONJUN. TERMOPAR CAMARA (K) | CHAMBER THERMOCOUPLE UNI | 1 | | | | | | | |
| 3 | T323024000 | CONJUN. TERMOPAR VAPOR 10/21 | STEAM THERMOCOUPLE UNIT 1 | 2 | | | | | | | |
| 4 | T553004000 | TARJETA CONTROL DE GAS | CONTROL CARD GAS | 1 | | | | | | | |
| 5 | T553003000 | TARJETA CONTROL DE CAMARA | CHAMBER CONTROL CARD | 1 | | | | | | | |
| 6 | T913003000 | CIRC PORTAMANDOS HEM HGV | CONTROL HOLDER CIRCUIT HE | 1 | | | | | | | |
| 7 | T553002000 | TARJETA CONTROL CALDERA | BOILER CONTROL CARD | 1 | | | | | | | |
| | Q221026000 | CLIP SUJECIÓN RÁPIDA Ø 4 | RAPID CONNECT CLIP Ø 4 | 8 | | | | | | | |
| 8 | T842812000 | SOPORTE CIRCUITOS HVG-10/11 | CIRCUIT SUPPORT HVG-10/11 | 1 | | | | | | | |
| | Q232030000 | ARANDELA A5 | WASHER A.5 | 4 | | | | | | | |
| | Q221308000 | TUERCA EXAGONAL AUT M5 H. ZI. | HEXAGONAL NUT M5 H. ZINC, | 4 | | | | | | | |
| 9 | T513009000 | ENCODER GAMA VISUAL | VISUAL RANGE ENCODER | 1 | | | | | | | |
| 10 | T643003000 | SERIGRAFIA VG | SERIGRAPHY VG | 1 | | | | | | | |
| 11 | T903007000 | BOTON DE MANDO | CONTROL BUTTON | 1 | | | | | | | |

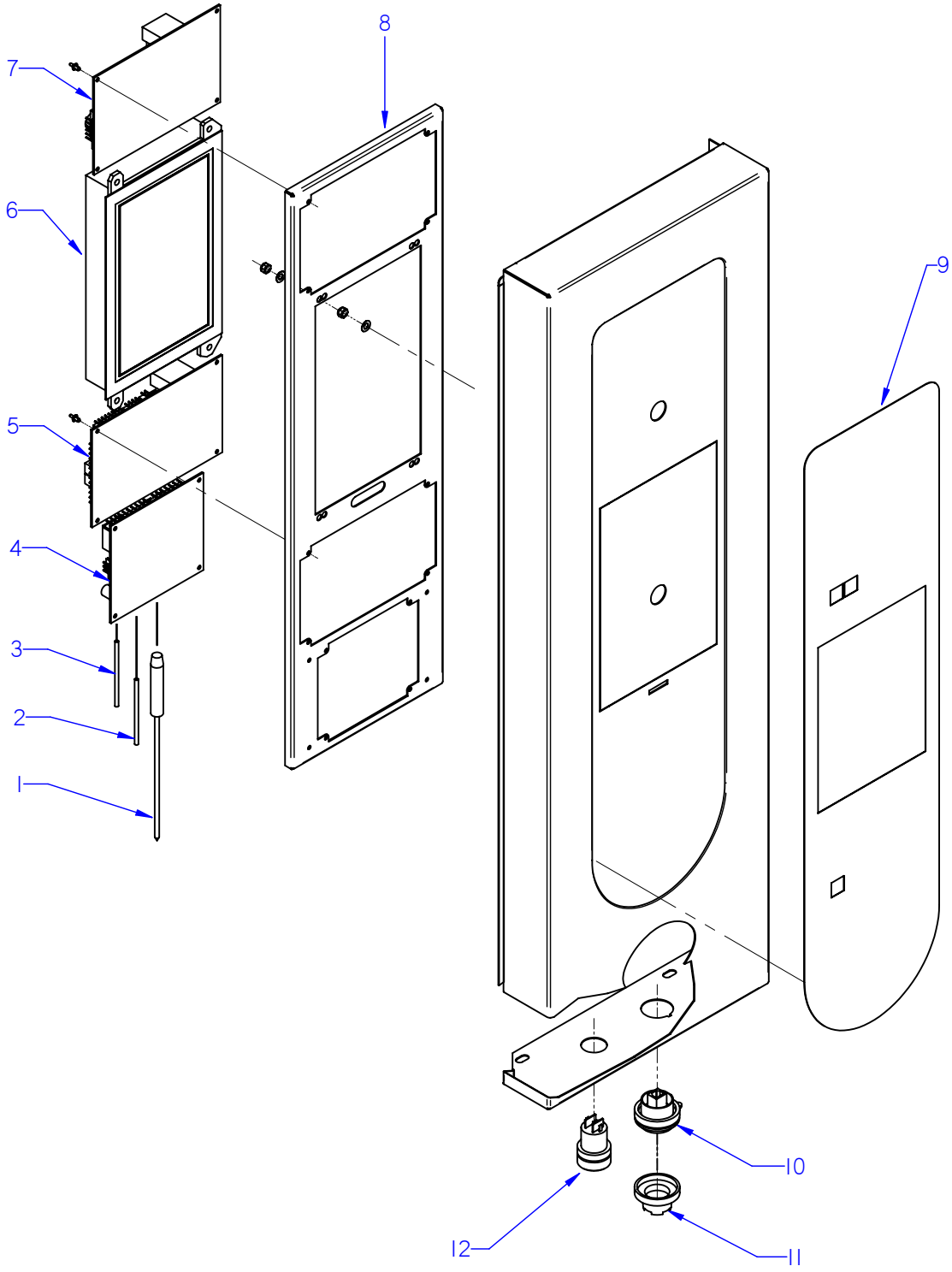


ITEM MARCADO EN COLOR = REPUESTO RECOMENDADO
COLOURED ITEM = RECOMMENDED SPARE PART

| N plano | Firma | Fecha | Aparato | Lamina | |
|---|---|---|---|---|---|
| C-2790 | | 2011-01 | CONJUNTO ELECTRICO PORTAMANDOS / CONTROL HOLDER ELECTRIC<br>HORNOS VPG-101 | 13 | Fagor Industrial S.Coop. FAGOR<br>Oñate |

| MOD. | HORNOS / OVEN | ZONA / ZONE | CONJUNTO ELECTRICO PORTAMANDOS<br>CONTROL HOLDER ELECTRIC | PLANO<br>DIAGRAM | C-2790 |
|---|---|---|---|---|---|

| ITEM | CODIGO<br>CODE | DENOMINACION | NAME | VPG-101 | | | | | | | NOTAS |
|---|---|---|---|---|---|---|---|---|---|---|---|
| 1 | T823009000 | CONJUN. SONDA NUCLEO 6 PUNT. | PROBE UNIT FOR CORE | 1 | | | | | | | |
| 2 | T323011000 | CONJUN. TERMOPAR CAMARA (K) | CHAMBER THERMOCOUPLE UNI | 1 | | | | | | | |
| 3 | T323024000 | CONJUN. TERMOPAR VAPOR 10/21 | STEAM THERMOCOUPLE UNIT 1 | 2 | | | | | | | |
| 4 | T553004000 | TARJETA CONTROL DE GAS | CONTROL CARD GAS | 1 | | | | | | | |
| 5 | T553003000 | TARJETA CONTROL DE CAMARA | CHAMBER CONTROL CARD | 1 | | | | | | | |
| 6 | T553010000 | PLATAFORMA VISUAL PLUS | VISUAL PLUS PLATFORM | 1 | | | | | | | |
| | Q032011000 | TORNILLO ALOMADO M3x10 | CURVED SCREW M.3x10 | 4 | | | | | | | |
| | Q232010000 | ARANDELA PLANA A3 DIN 125 | WASHER A3 DIN 125 | 4 | | | | | | | |
| | Q242010000 | ARANDELA ABANICO A3 A.304 | FAN SHAPED WASHER A.3 | 4 | | | | | | | |
| | Q161310000 | TUERCA EXAGONAL M3 H. ZINC, | HEXAGONAL NUT M3 H. ZINC, | 4 | | | | | | | |
| | Q221023000 | CLIP SUJECIÓN RÁPIDA Ø 4 | RAPID CONNECT CLIP Ø 4 | 4 | | | | | | | |
| 7 | T553002000 | TARJETA CONTROL CALDERA | BOILER CONTROL CARD | 1 | | | | | | | |
| | Q221023000 | CLIP SUJECIÓN RÁPIDA Ø 4 | RAPID CONNECT CLIP Ø 4 | 4 | | | | | | | |
| 8 | T652804000 | SOPORTE CIRCUITOS VPE VPG 21 | SUPPORT CIRCUITS VPE VPG 21 | 1 | | | | | | | |
| | Q232030000 | ARANDELA A5 | WASHER A.5 | 4 | | | | | | | |
| | Q221308000 | TUE.EX.AUT.M5 H.ZINCADA | HEXAGONAL NUT M5 H. ZINC, | 4 | | | | | | | |
| 9 | T853005000 | SERIGRAFIA VPG-101 201 | SERIGRAPHY VPG-101 201 | 1 | | | | | | | |
| 10 | T723006000 | CONECTOR USB VISUAL PLUS | VISUAL PLUS USB CONNECTOR | 1 | | | | | | | |
| 11 | T723007000 | TAPA USB VISUAL PLUS | VISUAL PLUS USB COVER | 1 | | | | | | | |
| 12 | T723009000 | PULSADOR SERIE MICRO | MICRO SWITCH SERIES | 1 | | | | | | | |
| | | | | | | | | | | | |
| | | | | | | | | | | | |
| | | | | | | | | | | | |
| | | | | | | | | | | | |
| | | | | | | | | | | | |
| | | | | | | | | | | | |
| | | | | | | | | | | | |
| | | | | | | | | | | | |
| | | | | | | | | | | | |
| | | | | | | | | | | | |
| | | | | | | | | | | | |

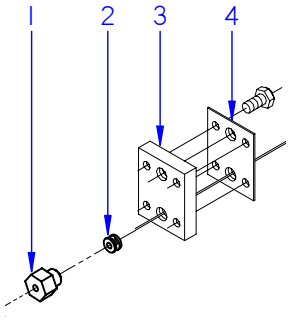


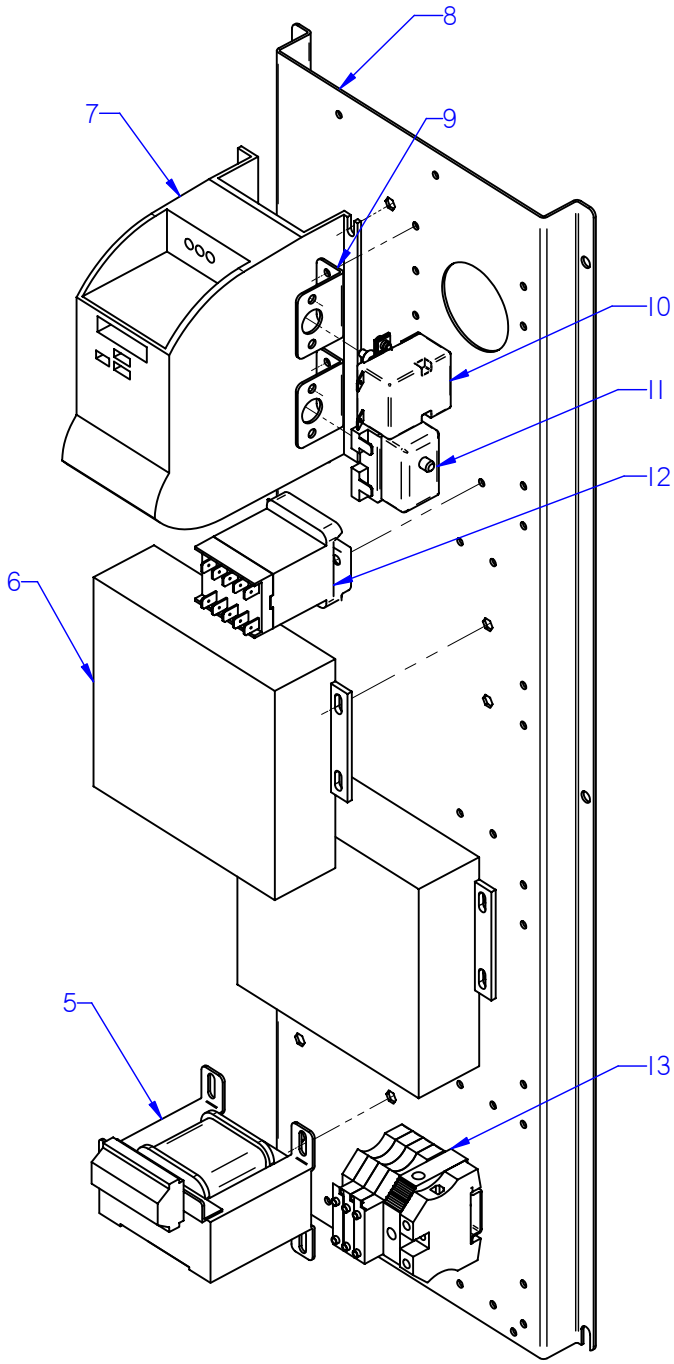


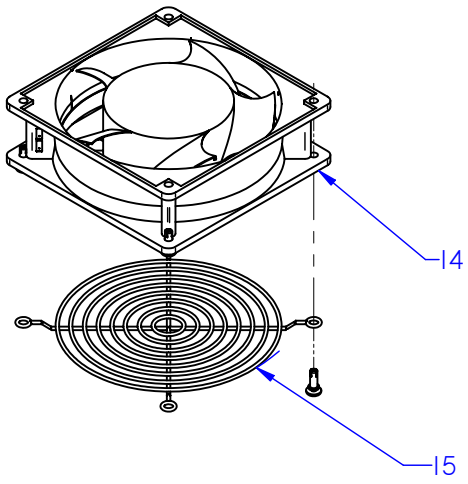


ITEM MARCADO EN COLOR = REPUESTO RECOMENDADO
COLOURED ITEM = RECOMMENDED SPARE PART

| N plano | Firma | Fecha | Aparato | Lamina | |
|---|---|---|---|---|---|
| C-2791 | | 2011-01 | CUADRO ELECTRICO / ELECTRIC PANEL<br>HORNOS COG / VG / VPG-061/101 | 14 | Fagor Industrial S.Coop. FAGOR<br>Onate |

| MOD. | HORNOS / OVEN | ZONA / ZONE | CUADRO ELECTRICO / ELECTRIC PANEL | PLANO DIAGRAM | C-2791 |
|---|---|---|---|---|---|

| ITEM | CODIGO CODE | DENOMINACION | NAME | COG-061 | COG-101 | VG-101 | VPG-101 | | | | NOTAS |
|---|---|---|---|---|---|---|---|---|---|---|---|
| 1 | R662629000 | RACORD CIERRE SONDA | PROBE CLOSING ADAPTOR | 2 | 2 | 2 | 2 | | | | |
| S/Nº | R662662000 | JUNTA CIERRE BULBO LIMITADOR | BULB LIMITER CLOSING SEAL | 1 | 1 | 1 | 1 | | | | |
| 2 | R662652000 | BICONO CIERRE SONDA | PROBE CLOSING BICONE | 1 | 1 | 1 | 1 | | | | |
| 3 | R662659000 | APOYO RACORD SONDA | PROBE CONNECTION SUPPORT | 1 | 1 | 1 | 1 | | | | |
| 4 | R692811000 | JUNTA PASAMUROS DOBLE | DOUBLE FEEDTHROUGH GASKE | 1 | 1 | 1 | 1 | | | | |
| | Q232020000 | ARANDELA A4 | WASHER A.4 | 4 | 4 | 4 | 4 | | | | |
| | Q012021000 | TORNILLO EXAGONAL M4X10 | HEXAGONAL SCREW M.4X10 | 4 | 4 | 4 | 4 | | | | |
| 5 | R503005000 | TRANSFORMADOR 230/12-0-12,0-1 | TRANSFORMER 230/12-0-12,0-1 | 1 | 1 | 1 | _ | | | | |
| 5 | T853002000 | TRANSFORMADOR 12-0-12-0,24-0 | TRANSFORMER 12-0-12-0,24-0 | _ | _ | _ | 1 | | | | |
| 6 | Z953004000 | CONTROL COMBUSTION | COMBUSTION CONTROL | 1 | 1 | 2 | 2 | | | | |
| 7 | T323037000 | VARIADOR FRECUENCIA SIE 0,37 | FREQUENCY VARIATOR SIE 0.37 | 1 | 1 | 1 | 1 | | | | |
| | Q242020000 | ARANDELA ABANICO A4 A.304 | FAN SHAPED WASHER A.4 | 12 | 12 | 12 | 12 | | | | |
| | Q032021000 | TORNILLO ALOMADO M4X10 | CURVED SCREW M.4x10 | 12 | 12 | 12 | 12 | | | | |
| 8 | T933004000 | CHAPA CUADRO ELECT. COG-061 | SQUARE PLATE ELEC. COG-061 | 1 | 1 | _ | _ | | | | |
| 8 | T843009000 | CHAPA CUADRO ELECTRI VGP 101 | SQUARE PLATE ELEC. VGP 101 | _ | _ | 1 | 1 | | | | |
| 9 | R343039000 | SOPORTE TERMOS VAPOR | THERMOSTAT SUPPORT | 1 | 1 | 2 | 2 | | | | |
| | Q412002000 | REMACHE AVINOX Ø4x10MM | TUBULAR RIVET 4x7,5 | 2 | 2 | 4 | 4 | | | | |
| 10 | T303009000 | TERMOSTATO LIMITADOR | THERMOSTAT LIMITER | 1 | 1 | 1 | 1 | | | | |
| | Z953041000 | TUERCA M.10x1 EGO 00.00600.075 | NUT M.10x1 EGO 00.00600.075 | 1 | 1 | 2 | 2 | | | | |
| 11 | Z953035000 | TERMOSTATO LIMITADOR AVISO | LIMITER THERMOSTAT WARNIN | _ | _ | 1 | 1 | | | | |
| 12 | Z213007000 | CONTACTOR 230V.50-60 | 230V.50-60 CONTACTOR | 1 | 1 | 1 | 1 | | | | |
| 13 | P453026000 | BORNE TIER 10 WPE-10103.O | 10 WPE-10103.O EARTH TERM. | 1 | 1 | 1 | 1 | | | | |
| | R073005000 | BORNA PORTAFUSIBLES | FUSE HOLDER TERMINAL | 3 | 3 | 3 | 3 | | | | |
| | Z263303000 | TOPE FINAL | END BUFFER | 1 | 1 | 1 | 1 | | | | |
| 14 | Z103066000 | VENTILADOR 230V.50-60HZ | FAN 230V 50/60HZ | 1 | 1 | 3 | 3 | | | | |
| 15 | T113015000 | PROTECCION VENTILADOR | FAN PROTECTION | 1 | 2 | 2 | 2 | | | | |
| | Q418021000 | REMACHE PLASTICO Ø4 L7,5-8,5 | PLASTIC RIVET Ø4 L7,5-8,5 | 4 | 4 | 8 | 8 | | | | |
| S/Nº | T303045000 | CONECTOR PASO 3,96 MM 8 VIAS | STEP CONNECTOR | 1 | 1 | 1 | 1 | | | | |
| | | | | | | | | | | | |
| | | | | | | | | | | | |
| | | | | | | | | | | | |

| MOD. | HORNOS / OVEN | ZONA / ZONE | VARIOS / MISCELLANEOUS | PLANO DIAGRAM | |
|---|---|---|---|---|---|

| ITEM | CODIGO CODE | DENOMINACION | NAME | COG-061 | COG-101 | VG-101 | VPG-101 | | | |
|---|---|---|---|---|---|---|---|---|---|---|
| | T936501000 | MANUAL DE INSTRUCCION. COG | INSTRUCTIO. BROCHURE COG | 1 | 1 | _ | _ | | | |
| | T946501000 | MANUAL DE INSTRUCCION. VG | INSTRUCTIO. BROCHURE VG | _ | _ | 1 | _ | | | |
| | T956501000 | MANUAL DE INSTRUCCION. VPG | INSTRUCTIO. BROCHURE VPG | _ | _ | _ | 1 | | | |
| | T843007000 | ESQU. TEORICO GAS 061-101-201 | THE. DIAGRAM GAS 061-101-201 | 1 | 1 | 1 | 1 | | | PLANO HC-81920 |
| | T833002000 | PLANO MONTAJE COG | ASSEMBLY PLAN COG | 1 | 1 | _ | _ | | | PLANO HD-13174 |
| | T843008000 | PLANO MONTAJE VG-201 VPG-201 | ASSEMBLY PLAN VG-201 VPG-20 | _ | _ | 1 | 1 | | | PLANO HD-13176 |
| | T303042000 | LEYENDA HORNOS | LEGEND OVENS | 1 | 1 | 1 | 1 | | | PLANO HC-76970 |
| | T833004000 | INSTAL. ELECTRICA 101 | ELEC. INSTALL. 101 | 1 | 1 | _ | _ | | | |
| | T843010000 | INSTAL. ELECTRICA VG 101 | ELEC. INSTALL. VG 101 | _ | _ | 1 | 1 | | | |
| | T903011000 | CABLEADO LUZ INTERIOR 6-11 | INTERIOR LIGHT WIRING 20-11 | 1 | 1 | 1 | 1 | | | |
| | T843006000 | CABLEADO LAVADO 061/101 | WASH WIRING HEP 061/101 | _ | _ | _ | 1 | | | |
| | T333009000 | CABLEADO LAVADO HEP | WASH WIRING HEP | _ | _ | _ | 1 | | | |
| | T853003000 | CABLEADO TRANSFORMA. - TFT | TRANSFORMER WIRING - TFT | _ | _ | _ | 1 | | | |
| | T723008000 | CABLE USB VISUAL PLUS | VISUAL PLUS USB CABLE | _ | _ | _ | 1 | | | |
| | T523004000 | CABLEADO PULSADOR RESET | RESET BUTTON WIRING | _ | _ | _ | 1 | | | |
| | T843005000 | CABLEADO MOTOR | MOTOR WIRING | 2 | 1 | 1 | 1 | | | |
| | T123010000 | CABLE ENCENDIDO | ON WIRING | 1 | 1 | 1 | 1 | | | |
| | T113022000 | CABLE ENCENDIDO HVG 10/11 | ON WIRING HVG 10/11 | _ | _ | 1 | 1 | | | |
| | T343012000 | CABLE. VARIADOR SOPL. 10/21 | VARIATOR WIRING SOPL.10/21 | 1 | 1 | 1 | 1 | | | |
| | T923016000 | CABLEADO BMF | WIRING BMF | 2 | 2 | 3 | 3 | | | |
| | | | | | | | | | | |
| | | | | | | | | | | |
| | | | | | | | | | | |
| | | | | | | | | | | |
| | | | | | | | | | | |
| | | | | | | | | | | |
| | | | | | | | | | | |
| | | | | | | | | | | |
| | | | | | | | | | | |
| | | | | | | | | | | |
| | | | | | | | | | | |

# VPG 10 1, VPG 20 1
# VG 10 1, VG 20 1
# COG 06 1, COG 10 1, COG 20 1

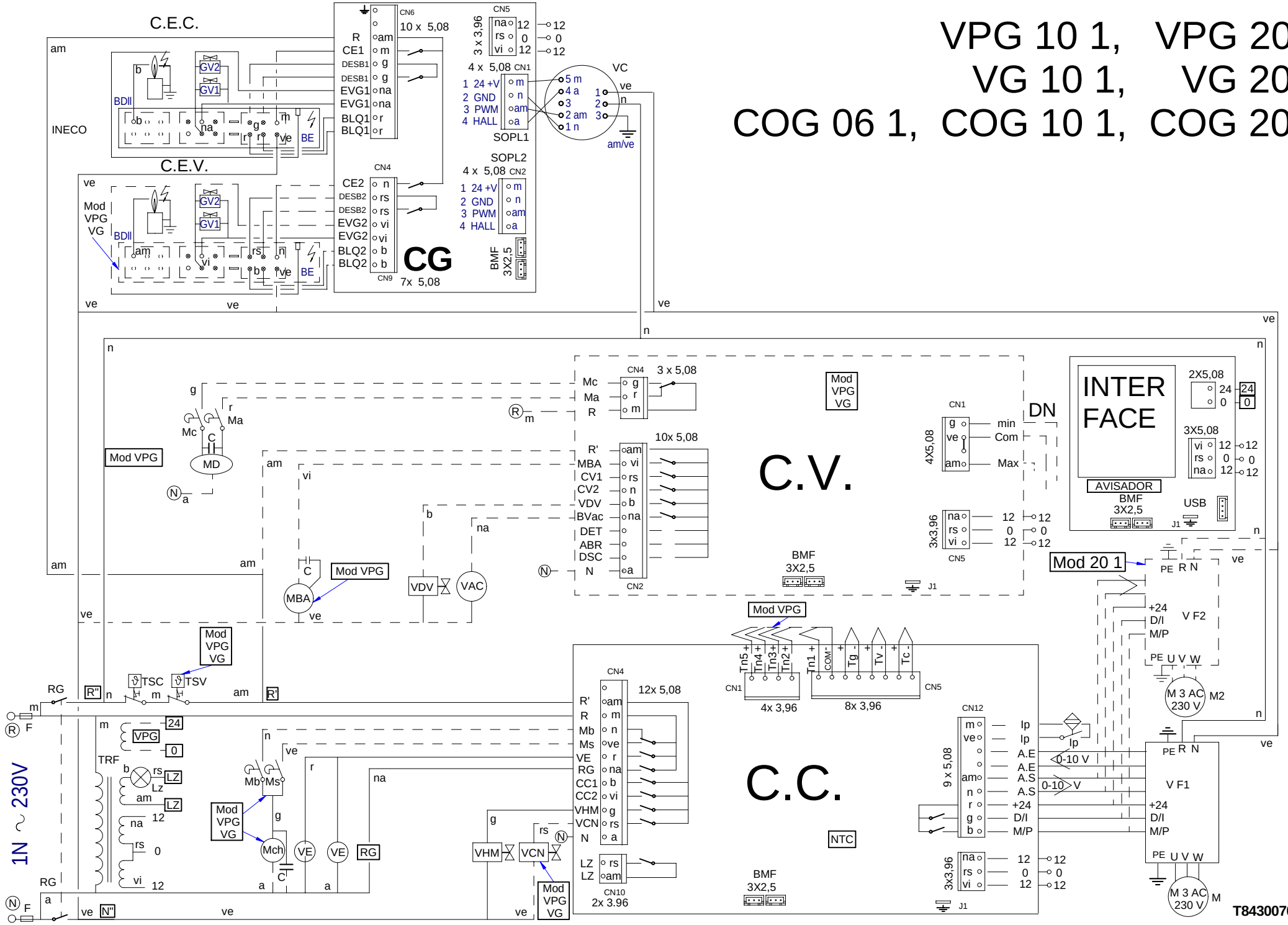

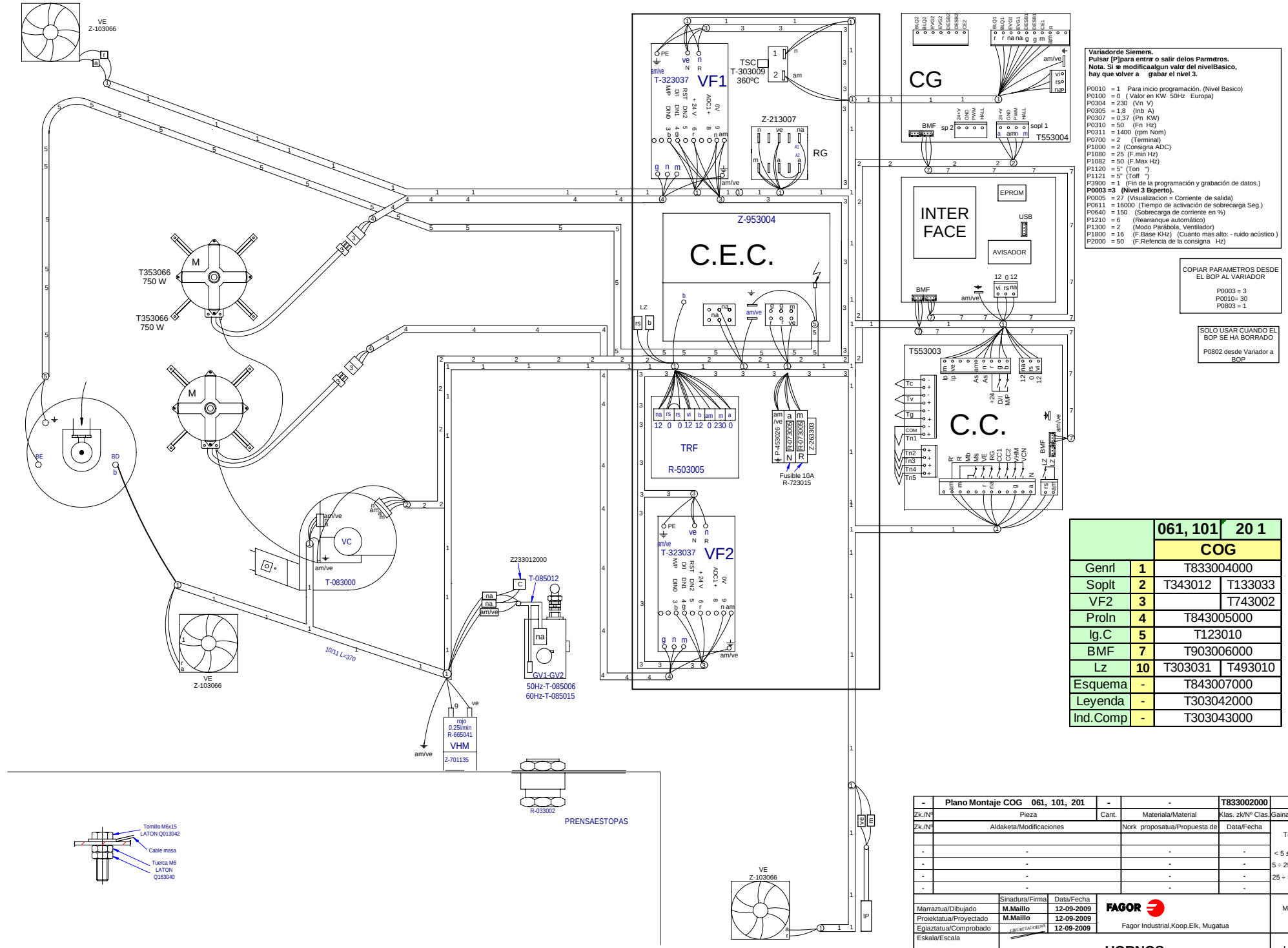


**Variador de Siemens.**
**Pulsar [P] para entrar o salir de los Parmetros.**
**Nota. Si se modifica algun valor del nivel Basico, hay que volver a grabar el nivel 3.**

| | | |
|---|---|---|
| P0010 | = 1 | Para inicio programación. (Nivel Basico) |
| P0100 | = 0 | ( Valor en KW 50Hz Europa) |
| P0304 | = 230 | (Vn V) |
| P0305 | = 1,8 | (Inb A) |
| P0307 | = 0,37 | (Pn KW) |
| P0310 | = 50 | (Fn Hz) |
| P0311 | = 1400 | (rpm Nom) |
| P0700 | = 2 | (Terminal) |
| P1000 | = 2 | (Consigna ADC) |
| P1080 | = 25 | (F.min Hz) |
| P1082 | = 50 | (F.Max Hz) |
| P1120 | = 5" | (Ton ") |
| P1121 | = 5" | (Toff ") |
| P3900 | = 1 | (Fin de la programación y grabación de datos.) |
| **P0003 =3** | | **(Nivel 3 Experto).** |
| P0005 | = 27 | (Visualizacion = Corriente de salida) |
| P0611 | = 16000 | (Tiempo de activación de sobrecarga Seg.) |
| P0640 | = 150 | (Sobrecarga de corriente en %) |
| P1210 | = 6 | (Rearranque automático) |
| P1300 | = 2 | (Modo Parábola, Ventilador) |
| P1800 | = 16 | (F.Base KHz) (Cuanto mas alto: - ruido acústico ) |
| P2000 | = 50 | (F.Refencia de la consigna Hz) |

COPIAR PARAMETROS DESDE EL BOP AL VARIADOR

P0003 = 3
P0010= 30
P0803 = 1

SOLO USAR CUANDO EL BOP SE HA BORRADO

P0802 desde Variador a BOP

| | | 061, 101, 201 |
|---|---|---|
| | | COG |
| Genrl | 1 | T833004000 |
| Soplt | 2 | T343012 / T133033 |
| VF2 | 3 | T743002 |
| Proln | 4 | T843005000 |
| lg.C | 5 | T123010 |
| BMF | 7 | T903006000 |
| Lz | 10 | T303031 / T493010 |
| Esquema | - | T843007000 |
| Leyenda | - | T303042000 |
| Ind.Comp | - | T303043000 |

| | | | | |
|---|---|---|---|---|
| - | Plano Montaje COG 061, 101, 201 | - | - | T833002000 | - |
| Zk./Nº | Pieza | Cant. | Materiala/Material | Klas. zk/Nº Clas. | Gainazal akabera/Tratamiento |
| Zk./Nº | Aldaketa/Modificaciones | | Nork proposatua/Propuesta de | Data/Fecha | Perdoi orokorrak Tolerancias generales |
| | | | | | |
| - | - | | - | - | < 5 ± 0.2 / 50 ÷ 100 ± 0.8 |
| - | - | | - | - | 5 ÷ 25 ± 0.4 / >100± 1 |
| - | - | | - | - | 25 ÷ 50 ± 0.6 / α ± 1 |
| - | - | | - | - | |

| | Sinadura/Firma | Data/Fecha |
|---|---|---|
| Marraztua/Dibujado | M.Maillo | 12-09-2009 |
| Proiektatua/Proyectado | M.Maillo | 12-09-2009 |
| Egiaztatua/Comprobado | LIBURUTAGOIENA | 12-09-2009 |

FAGOR
Fagor Industrial,Koop.Elk, Mugatua

Eskala/Escala: -

**HORNOS**

Plano hau ezin daiteke erabili, ez berriztatu, gure baimenik gabe.

Gainazal perdoia Mecanizado superficial: —

Plano Zk./Plano Nº: HD-13174

- Zk. ord. du
- Zk.gaitik ord.

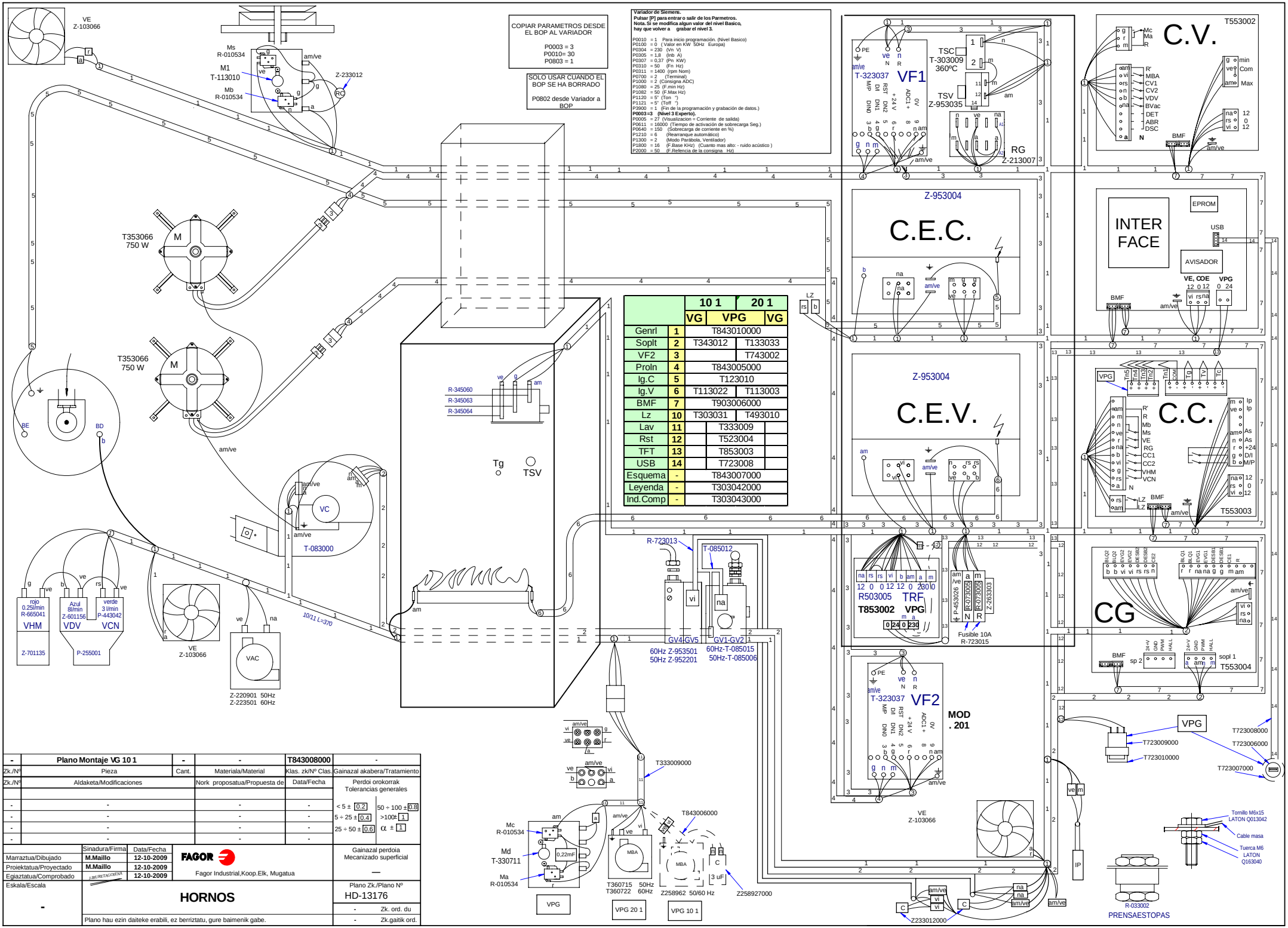


| | | 10 1 | 20 1 |
|---|---|---|---|
| | | VG | VPG | VG |
| Genrl | 1 | T843010000 | |
| Soplt | 2 | T343012 | T133033 |
| VF2 | 3 | | T743002 |
| Proln | 4 | T843005000 | |
| Ig.C | 5 | T123010 | |
| Ig.V | 6 | T113022 | T113003 |
| BMF | 7 | T903006000 | |
| Lz | 10 | T303031 | T493010 |
| Lav | 11 | T333009 | |
| Rst | 12 | T523004 | |
| TFT | 13 | T853003 | |
| USB | 14 | T723008 | |
| Esquema | - | T843007000 | |
| Leyenda | - | T303042000 | |
| Ind.Comp | - | T303043000 | |

| - | Plano Montaje VG 10 1 | - | - | T843008000 | - |
|---|---|---|---|---|---|
| Zk./Nº | Pieza | Cant. | Materiala/Material | Klas. zk/Nº Clas. | Gainazal akabera/Tratamiento |
| Zk./Nº | Aldaketa/Modificaciones | | Nork proposatua/Propuesta de | Data/Fecha | Perdoi orokorrak Tolerancias generales |
| | | | | | |
| - | - | | - | - | < 5 ± 0.2 / 50 ÷ 100 ± 0.8 |
| - | - | | - | - | 5 ÷ 25 ± 0.4 / >100± 1 |
| - | - | | - | - | 25 ÷ 50 ± 0.6 / α ± 1 |
| - | - | | - | - | |

| | Sinadura/Firma | Data/Fecha |
|---|---|---|
| Marraztua/Dibujado | M.Maillo | 12-10-2009 |
| Proiektatua/Proyectado | M.Maillo | 12-10-2009 |
| Egiaztatua/Comprobado | | 12-10-2009 |

FAGOR
Fagor Industrial,Koop.Elk, Mugatua

Gainazal perdoia Mecanizado superficial: —

Eskala/Escala: -

**HORNOS**

Plano Zk./Plano Nº: HD-13176

Zk. ord. du: -

Zk.gaitik ord.: -

Plano hau ezin daiteke erabili, ez berriztatu, gure baimenik gabe.

| | ESPAÑOL | FRANÇAIS | ENGLISH | DEUTSCH | ITALIANO |
|---|---|---|---|---|---|
| BEC | Bujía Encendido Cámara | Bougie Allumage Chambre | Chamber Spark Plug | Zündkerze Einschalten Garraum | Candela di Accensione Camera |
| BEV | Bujía Encendido Caldera | Bougie Allumage Chaudière | Boiler Spark Plug | Zündkerze Einschalten Boile | Candela di Accensione Caldaia |
| C.C. | Control Camara | Contrôle Chambre | Chamber Control | Steuerung Garraum | Controllo Camera |
| C.E.C | Control Combustión Cámara | Contrôle Combustion Chambre | Chamber Combustion Control | Steuerung Verbrennung Garraum | Controllo Combustione Camera |
| C.E.V | Control Combustión Caldera | Contrôle Combustion Chaudière | Boiler Combustion Control | Steuerung Verbrennung Boiler | Controllo Combustione Caldaia |
| C.G. | Control Gas | Contrôle Gaz | Control Gas | Steuern Sie Gas | Controlli il gas |
| C.V. | Control Caldera | Contrôle Chaudière | Boiler Control | Steuerung Boiler | Controllo Caldaia |
| CC1, CC2 | Contactor Resistencia Cámara | Contacteur Élément Chauffant Chambre | Chamber Heating Element Contactor | Schütz Heizwiderstand Garraum | Contattore Resistenza Camera |
| CK1, CK2 | Contactor General Calentamiento | Relais Élément Chauffant | Heating Element Relay | Relais Heizwiderstand | Relè Resistenza |
| CV1, CV2 | Contactor Resistencias Caldera | Contacteur Élément Chauffant Chaudière | Boiler Heating Element Contactor | Schütz Heizwiderstand Boiler | Contattore Resistenza Caldaia |
| DEC | Detector Llama Cámara | Détecteur Flamme Chambre | Chamber Flame Detector | Flammendetektor Garraum | Rilevatore di Fiamma Camera |
| DEV | Detector Llama Caldera | Détecteur Flamme Chaudière | Boiler Flame Detector | Flammendetektor Boiler | Rilevatore di Fiamma Caldaia |
| DN | Detector Nivel Caldera | Détecteur Niveau Chaudière | Boiler Level Detector | Pegeldetektor Boiler | Rilevatore Livello Caldaia |
| F | Fusibles | Fusibles | Fuses | Sicherungen | Fusibili |
| FI | Filtro Interferencias | Filtre Interférences | Interference Filter | Störungsfilter | Filtro Interferenze |
| FM | Térmico Motor | Thermique Moteur | Thermal Engine | Thermoschalter Motor | Termico Motore |
| GV1, GV2 | Electro válvula Gas Cámara | Électrovanne Gaz Chambre | Chamber Gas Solenoid Valve | Elektroventil Gas Garraum | Elettrovalvola Gas Camera |
| GV3, GV4 | Electro válvula Gas Caldera | Électrovanne Gaz Chaudière | Boiler Gas Solenoid Valve | Elektroventil Gas Boiler | Elettrovalvola Gas Caldaia |
| Ip | Interruptor Seguridad Puerta | Interrupteur Sécurité Porte | Door Safety Switch | Sicherheitsschalter Tür | Iterruttore Sicurezza Porta |
| Lz | Luz Interior | Éclairage Intérieur | Inner Light | Innenbeleuchtung | Luce Interna |
| M, M2 | Motor Turbina | Moteur Turbine | Turbine Engine | Motor Turbine | Motore Turbina |
| Ma | Interruptor Micro Abierto | Microrupteur Ouvert | Open Microswitch | Mikroschalter Geöffnet | Iterruttore Micro Aperto |
| Mb | Interruptor Micro Bajada | Microrupteur Descente | Drop Microswitch | Mikroschalter Senken | Iterruttore Micro Discesa |
| Mc | Interruptor Micro Cerrado | Microrupteur Fermé | Closed Microswitch | Mikroschalter Geschlossen | Iterruttore Micro Chiuso |
| Mch | Motor Chimenea | Moteur Cheminée | Stack Engine | Motor Abluftkamin | Motore Canna |
| MD | Motor Desague | Moteur évacuation | Drain Engine | Motor Abfluss | Motore scolo |
| Ms | Interruptor Micro Subida | Microrupteur Montée | Rise Microswitch | Mikroschalter Heben | Iterruttore Micro Salita |
| PF | Potenciómetro Selector Funciones | Potentiomètre Sélecteur Fonctions | Functions Selector Potentiometer | Potentiometer Funktionswahlschalter | Potenziometro Selettore Funzioni |
| RC | Resistencias Cámara | Éléments Chauffants Chambre | Chamber Heating Element | Heizwiderstände Garraum | Resistenze Camere |
| RG | Rele General | Relais Général | Main Relay | Hauptrelais | Relè principale |
| RV | Resistencias Caldera | Éléments Chauffants Chaudière | Boiler Heating Element | Heizwiderstände Boiler | Resistenze Caldaia |
| Tc | Sonda Cámara | Sonde Chambre | Chamber Probe | Sonde Garraum | Sonda Camera |
| TCN | Termostato Condensación | Thermostat Condensation | Condensation Thermostat | Thermostat Kondensierung | Termostato Condensazione |
| Tg | Sonda Caldera | Sonde Chaudière | Boiler Probe | Sonde Boiler | Sonda Caldaia |
| Tn | Sonda Núcleo | Sonde Noyau | Core Probe | Kerntemperaturmessonde | Sonda Nucleo |
| TRF | Transformador | Transformateur | Transformer | Transformator | Trasformatore |
| TSC | Termostato Seguridad Cámara | Thermostat Sécurité Chambre | Chamber Safety Thermostat | Sicherheitsthermostat Garraum | Termostato Sicurezza Camera |
| TSV | Termostato Seguridad Caldera | Thermostat Sécurité Chaudière | Boiler Safety Thermostat | Sicherheitsthermostat Boiler | Termostato Sicurezza Caldaia |
| Tv | Sonda Vapor | Sonde Vapeur | Steam Probe | Sonde Dampf | Sonda Vapore |
| VAC | Bomba Vaciado | Pompe Vidange | Vacuum Pump | Ablasspumpe | Pompa scarico |
| MBA | Moto Bomba Aclarado | Pompe Rinçage | Rinsing Pump | Pumpe Ausspülen | Pompa Risciacquo |
| VC1, VC2 | Ventilador Soplante Camara | Ventilateur Soufflant | Blowing Fan | Ventilator Gebläse | Ventilatore Soffiante |
| VCN | Electro válvula Condensación | Électrovanne Condensation | Condensation Solenoid Valve | Elektroventil Kondensierung | Elettrovalvola Condensazione |
| VDV | Electro válvula Llenado Caldera | Électrovanne Remplissage Chaudière | Chamber Filling Solenoid Valve | Elektroventil Füllung Boiler | Elettrovalvola di Riempimento Caldaia |
| VE | Ventilador Cuadro Eléctrico | Ventilateur Tableau Électrique | Fan Switchboard | Ventilator Elektrotafel | Ventilatore Quadro Elettrico |
| VF1,VF2 | Variador de Frecuencia | Variateur Vitesse | Speed Variator | Geschwindigkeitsregler | Variatore di Velocità |
| VHM | Electro válvula Humidificador | Électrovanne Humidificateur | Humidifier Solenoid Valve | Elektroventil Befeuchtungsvorrichtung | Elettrovalvola Umidificatore |
| Vv | Ventilador Soplante Caldera | Ventilateur soufflement chaudière | Boiler Blowing Fan | Durchbrennenventilator zum Dampfkessel | Ventilatore Soffiante caldaia |
| | **COLORES** | **COULEURS** | **COLOUR** | **FARBEN** | **COLORE** |
| a | Azul | Bleu | Blue | Blau | Blu |
| am | Amarillo | Jaune | Yellow | Gelb | Giallo |
| am/ve | Amarillo/verde | Jaune / vert | Yellow / green | Gelb/grün | Giallo/verde |
| b | Blanco | Blanc | White | Weiß | Bianco |
| g | Gris | Gris | Grey | Grau | Grigio |
| m | Marrón | Marron | Brown | Braun | Marrone |
| n | Negro | Noir | Black | Schwarz | Nero |
| na | Naranja | Orange | Orange | Orange | Arancio |
| r | Rojo | Rouge | Red | Rot | Rosso |
| rs | Rosa | Rose | Pink | Rosa | Roseo |
| ve | Verde | Vert | Green | Grün | Verde |
| vi | Violeta | Violet | Purple | Violett | Viola |
| | | | | | T303042000 |