FAGOR

FAGOR INDUSTRIAL

DESPIECE TÉCNICO
TECHNICAL PARTS

Lavavajillas

Dishwasher

MODELOS
AD-125 / SOFT / HRS

Diciembre 2014 December
Revisado Julio 2015 July Revised



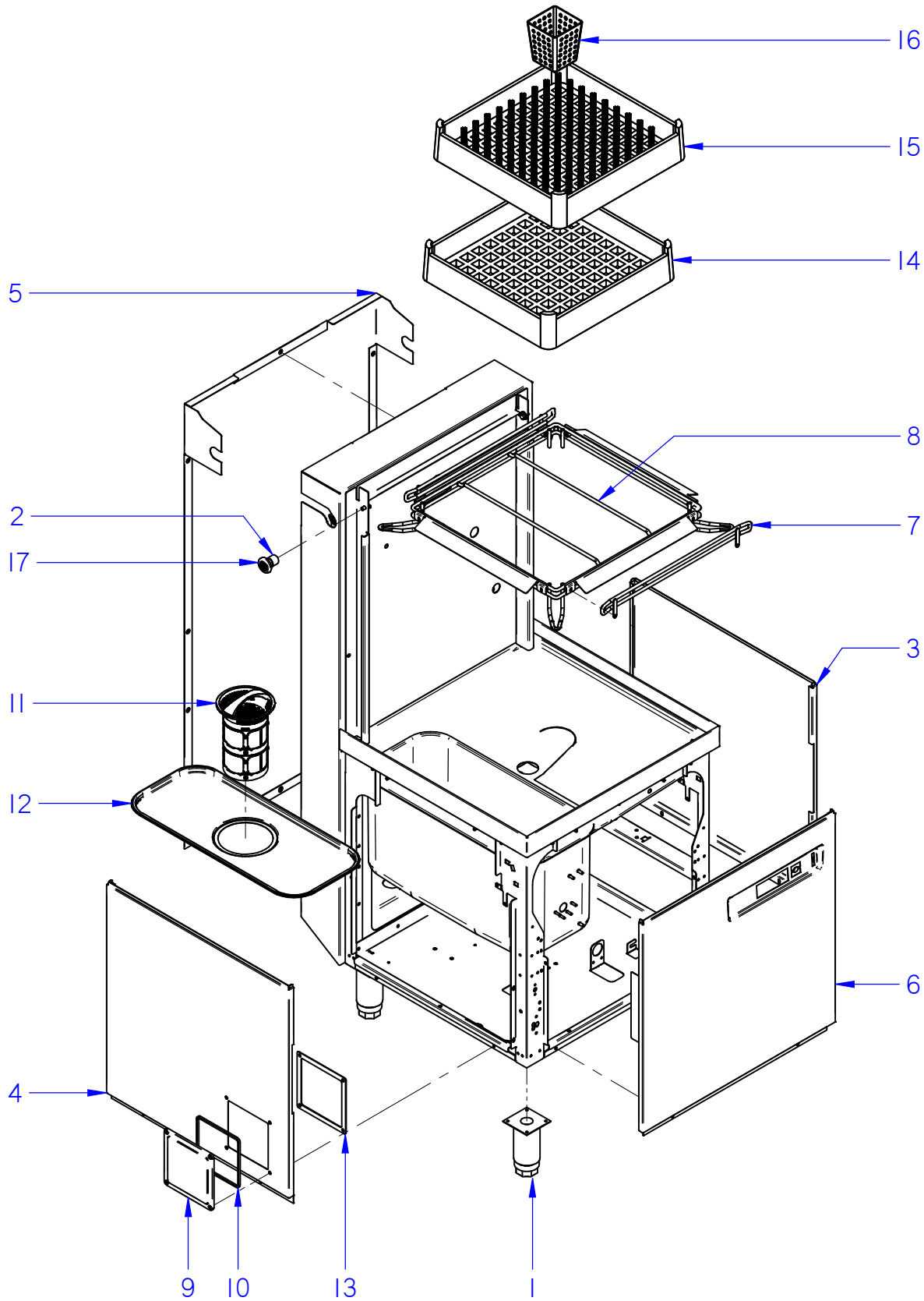

ITEM MARCADO EN COLOR = REPUESTO RECOMENDADO
COLOURED ITEM = RECOMMENDED SPARE PART

N plano / Drawing N.	Firma / Signature	Fecha / Date	Aparato / Appliance	Lamina / Sheet	
C-3272	Iban R.	07-2015	MUEBLE / FRAME LAVAVAJILLAS AD-125 DISHWASHER	1	Fagor Industrial S.Coop. FAGOR Oñate

ZONA / ZONE	ARMAZON / FRAME	LÁMINA / DRAWING	C-3272	FAGOR

ITEM	REFERENCIA REFERENCE	DENOMINACIÓN	DENOMINATION	AD-125	AD-125 HRS						RECOMMENDED	ELIMINADO ELIMINATED	INTRODUCIDO INTRODUCED	NOTAS / NOTES
1	12048723	PATAS REGULABLES	REGULABLE FEET	4	4							08/05/2015		
1	12009104	PATAS REGULABLES	REGULABLE FEET	4	4								08/05/2015	
2	12098018	CASQUILLO RODADURA	ROLLING BUSHING	2	2									
3	12120608	PANEL LATERAL DCHO	RIGHT SIDE PANEL	1	1									
4	12120609	PANEL LATERAL IZDO	LEFT SIDE PANEL	1	1									
5	12047720	PANEL POSTERIOR CAPOTA	RARE PANEL	1	_									
5	12111483	PANEL POSTERIOR CAPOTA HRS	RARE PANEL HRS	_	1									
6	12120597	PANEL FRONTAL ADVANCE	ADVANCE FRONT PANEL	1	1									
7	12045900	TOPE BASE CESTILLO COMPLETO	COMPLETE BASKET BASE END	2	2									
8	12045909	BASE CESTILLO VARILLA COMPLETA	COMPLETE WIRE BASKET BASE	1	1									
9	12095220	TAPA CAJA CONEXIONES	CONNECTIONS BOX COVER	1	1									
10	12096947	JUNTA TAPA	COVER'S SEAL	1	1									
11	12049651	CESTILLO RECOGEDOR ADVANCE	ADVANCE DUSTPAN BASKET	1	1									
12	12047944	BANDEJA FILTRO ADVANCE	ADVANCE FILTER TRAY	1	1									
13	12103501	JUNTA EPDM CAJA CONEXIONES	CONNECTION BOX EPDM JOINT	1	1									
14	12025011	CESTILLO BASE CT-10	CT-10 BASE BASKET	1	1									
15	12102646	CESTILLO PLATOS CP-16-18	CP-16-18 PLATES BASKET	1	1									
16	12023745	CESTILLO CUBIERTOS	CUTLERY BASKET	8	8									
17	12047509	RODILLO ELEVACIÓN CAPÓ	HOOD ASCENT ROLLER	2	2									

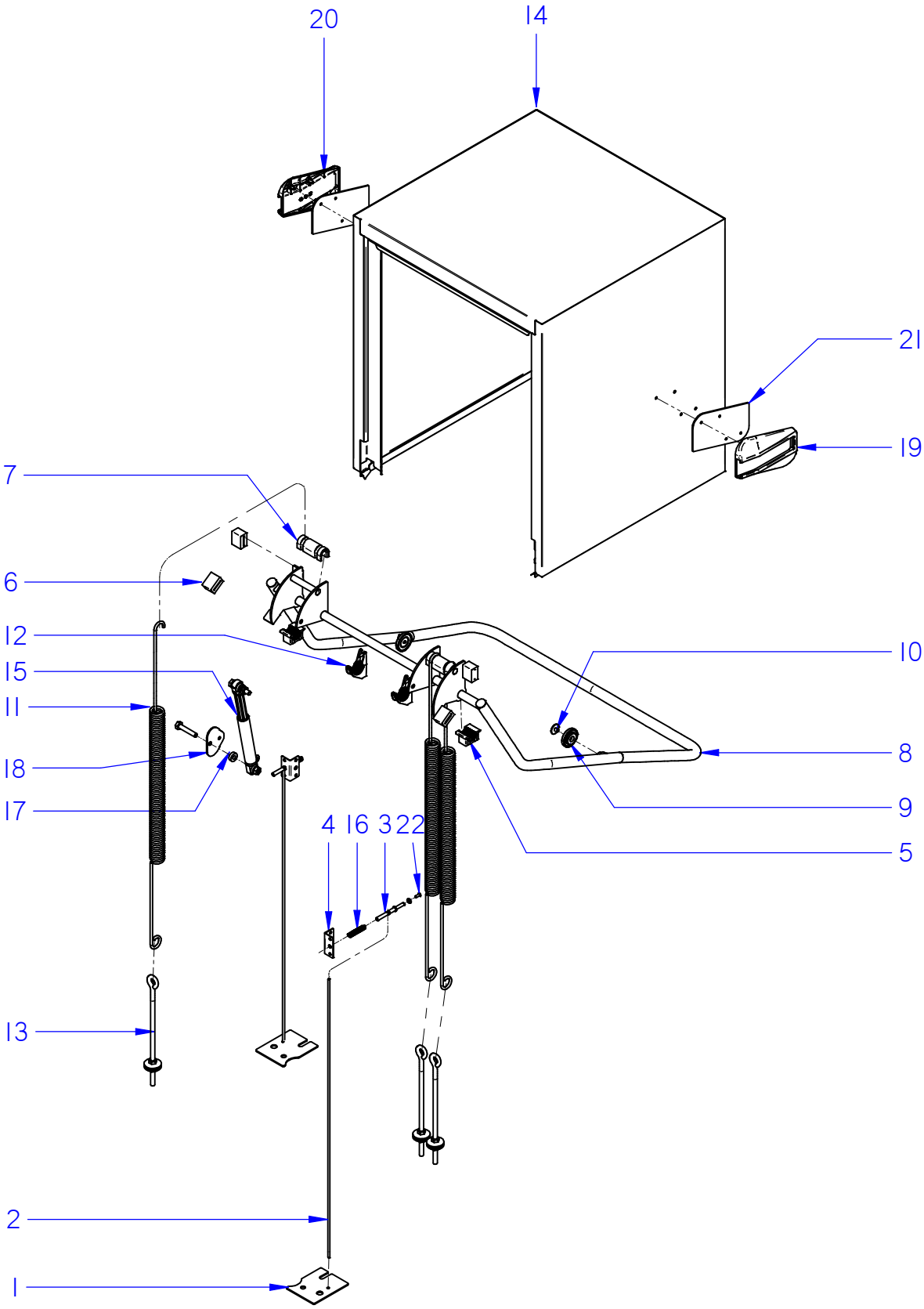

ITEM MARCADO EN COLOR = REPUESTO RECOMENDADO
COLOURED ITEM = RECOMMENDED SPARE PART

N plano / Drawing N.	Firma / Signature	Fecha / Date	Aparato / Appliance	Lamina / Sheet	
C-3273	Iban R.	07-2015	ASA-CAPOTA / HANDLE HOOD LAVAVAJILLAS AD-125 DISHWASHER	2	Fagor Industrial S.Coop. FAGOR Oñate

ZONA / ZONE	ASA-CAPOTA / HANDLE-HOOD	LÁMINA / DRAWING	C-3273	FAGOR

ITEM	REFERENCIA REFERENCE	DENOMINACIÓN	DENOMINATION	AD-125							RECOMMENDED	ELIMINADO ELIMINATED	INTRODUCIDO INTRODUCED	NOTAS / NOTES
1	12096877	SOPORTE BLOQUEO SEGURIDAD	SECURITY LOCK SUPPORT	2										
2	12096881	VARILLA BLOQUEO SEGURIDAD	SECURITY LOCK ROD	2										
3	12096882	EJE BLOQUEO SEGURIDAD	SECURITY LOCK SHAFT	2										
4	12096883	TAPA BLOQUEO SEGURIDAD	SECURITY LOCK COVER	2										
5	12098128	SOPORTE DE GIRO EJE ASA	HANDLE AXIS ROD SUPPORT	2										
6	12047537	TOPE GOMA BIELA	CONNECTING ROD RUBBER END	4										
7	12096710	CASQUILLO APOYO MUELLE	SPRING SUPPORT BUSHING	2										
8	12098150	SISTEMA ELEVACION CAPOTA EVO	HOOD ASCENT SYSTEM EVO	1										
9	12098068	RODILLO ASA CAPOTA EVO	EVO HOOD HANDLE ROLLER	2										
10	12098073	TORNILLO RODILLO ASA EVO	HANDLE ROLLER SCREW	2										
11	12048836	MUELLE CAPOTA K7.5	HOOD SPRING K7.5	3										
12	12047864	SOP. BARRA ELEVACION CAPOTA	HOOD ASCENT ROD SUPPORT	2										
13	12048915	GANCHO ROSCADO M10-L315	THREADED HOOK M10-L315	3										
14	12095710	CAPOTA DOBLE PARED EVO	DOUBLE WALL HOOD EVO	1										
15	12024980	AMORTIG. RD10FK 140N SUSPA	SHOCK ABSORVER RD10FK 140N	1										
16	12110409	MUELLE SIS. BLOQUEO CAPOTA	HOOD'S LOCK SYSTEM SPRING	2										
17	12025255	CASQUILLO RODANTE	ROLLING BUSHING	1										
18	12098217	SOPORTE AMORTIGUADOR	SHOCK ABSORVER SUPPORT	1										
19	12091573	CARRIL IZDO CAPOTA	HOOD'S LEFT GUIDE	1										
20	12091933	CARRIL DCHO CAPOTA	HOOD'S RIGHT GUIDE	1										
21	12093162	JUNTA PLANA CARRIL	GUIDE'S PLANE SEAL	2										
22	12010242	TORNILLO ESPECIAL M-5X13	SPECIAL SCREW M-5X13	2										

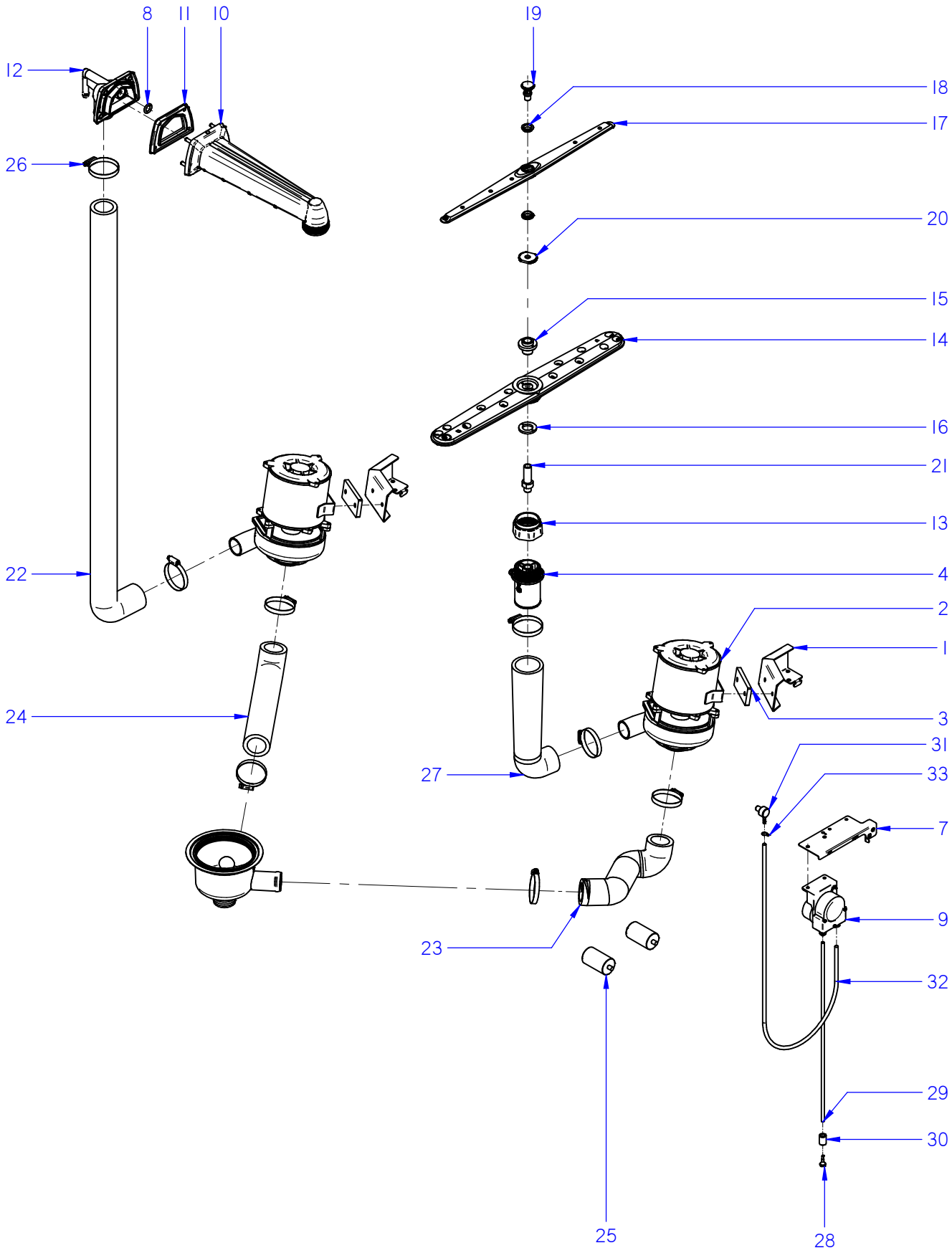

ITEM MARCADO EN COLOR = REPUESTO RECOMENDADO
COLOURED ITEM = RECOMMENDED SPARE PART

N plano / Drawing N.	Firma / Signature	Fecha / Date	Aparato / Appliance	Lamina / Sheet	
C-3274	Iban R.	06-2014	PARTE FUNCIONAL LAVADO / WASHING FUNCTIONAL PART LAVAVAJILLAS AD-125 DISHWASHER	3	Fagor Industrial S.Coop. FAGOR Onate

ZONA / ZONE	PARTE FUNCIONAL LAVADO / WASHING FUNCTIONAL PART	LÁMINA / DRAWING	C-3274	FAGOR

ITEM	REFERENCIA REFERENCE	DENOMINACIÓN	DENOMINATION	AD-125							RECOMMENDED	ELIMINADO ELIMINATED	INTRODUCIDO INTRODUCED	NOTAS / NOTES
1	12046160	SOPORTE BOMBA LAVADO	WASHIG PUMP SUPPORT	2										
2	12043287	MOTOBOMBA 590KW 50Hz	WASHIG PUMP 590KW 50Hz	2							X			
2	12102834	MOTOBOMBA 590KW 60Hz	WASHIG PUMP 590KW 60Hz	2							X			
3	12023556	BASE BOMBA LAVADO 1003016	WASHIG PUMP BASE 1003016	2										
4	12047910	SOP. DISTRIBUIDOR INFERIOR	LOWER SPRY-ARM SUPPORT	1										
7	12120598	SOP. DOSIFICADORES CAPOTA	DISPENSERS SUPPORT	1										
8	12049214	JUNTA TORICA ACLARADO 13.8-3.5	RINSING O-RING 13,8-3,5	1										
9	12024216	DOSIF. DGTE REGULABLE G300	DETERG. REGUL. DISPENSER	1							X			
10	12048173	BRAZO LAVAD-ACLAR. CAPOTA	WASH-RINSE ARM	1										
11	12048366	JUNTA BRAZO LAVADO-ACLAR.	WASH-RINSE ARM'S SEAL	1										
12	12048367	CIERRE BRAZO LAVADO-ACLAR.	WASH-RINSE ARM'S CLOSURE	1										
13	12048171	ADAPTADOR RAMAS LAVADO	WASHING ARMS ADAPTER	2										
14	12003421	DISTRIBUIDOR COMPLETO	COMPLETE SPRY-ARM	2										
15	12025116	CASQUILLO DISTRIBUIDOR	SPRY-ARM'S BUSHING	2										
16	12023674	ARANDELA AMARRE	TIGHTEN UP WASHER	2										
17	12102984	DISTRIBUIDOR ACLARADO CONCEPT	CONCEPT RINSE SPRY-ARM	2										
18	12041628	PROTECTOR FUGAS ACLARADO	RINSE LEAKAGE PROTECTOR	4										
19	12043422	EJE ACLARADO	RINSE SHAFT	2										
20	12043288	TUERCA ESPECIAL	SPECIAL NUT	2										
21	12112480	EJE LAVADO CAPOTA ADVANCE	WASHING SHAFT	2										
22	12048013	ARBOL LAVADO 2 BOMBAS	2 PUMS WASHING TREE	1										
23	12047688	CONDUCTO ASPIRACION 2 BOMB.	2 PUMP SUCTION PIPE	1										
24	12046162	CONDUCTO ASPIRACION	SUCTION PIPE	1										
25	12024376	CONDENSADOR 10MF	10MF CONDENSER	2							X			
26	12009962	ABRAZADERA 40-60	40-60 CLAMP	8										
27	12048012	CODO IMPULSION 2 BOMBAS	2 PUMP EXPULSION ELBOW	1										
28	12011355	FILTRO ASPIRACION	SUCTION FILTER	1										
29	12024139	CONDUCTO ASPIRACIÓN AZKOY	AZKOY SUCTION PIPE	1										
30	12024353	PESO FILTRO	FILTER'S WEIGHT	1										
31	12024531	INYECTOR DETERGENTE INOX	DETERGENT INJECTOR	1										
32	11000079	CONDUCTO DOSIF. TRANSP 6X4	DISPENSER TRANSPARENT PIPE	1										
33	12023707	BRIDA ELASTICA TUBO	ELASTIC CLAMP FOR PIPES	1										

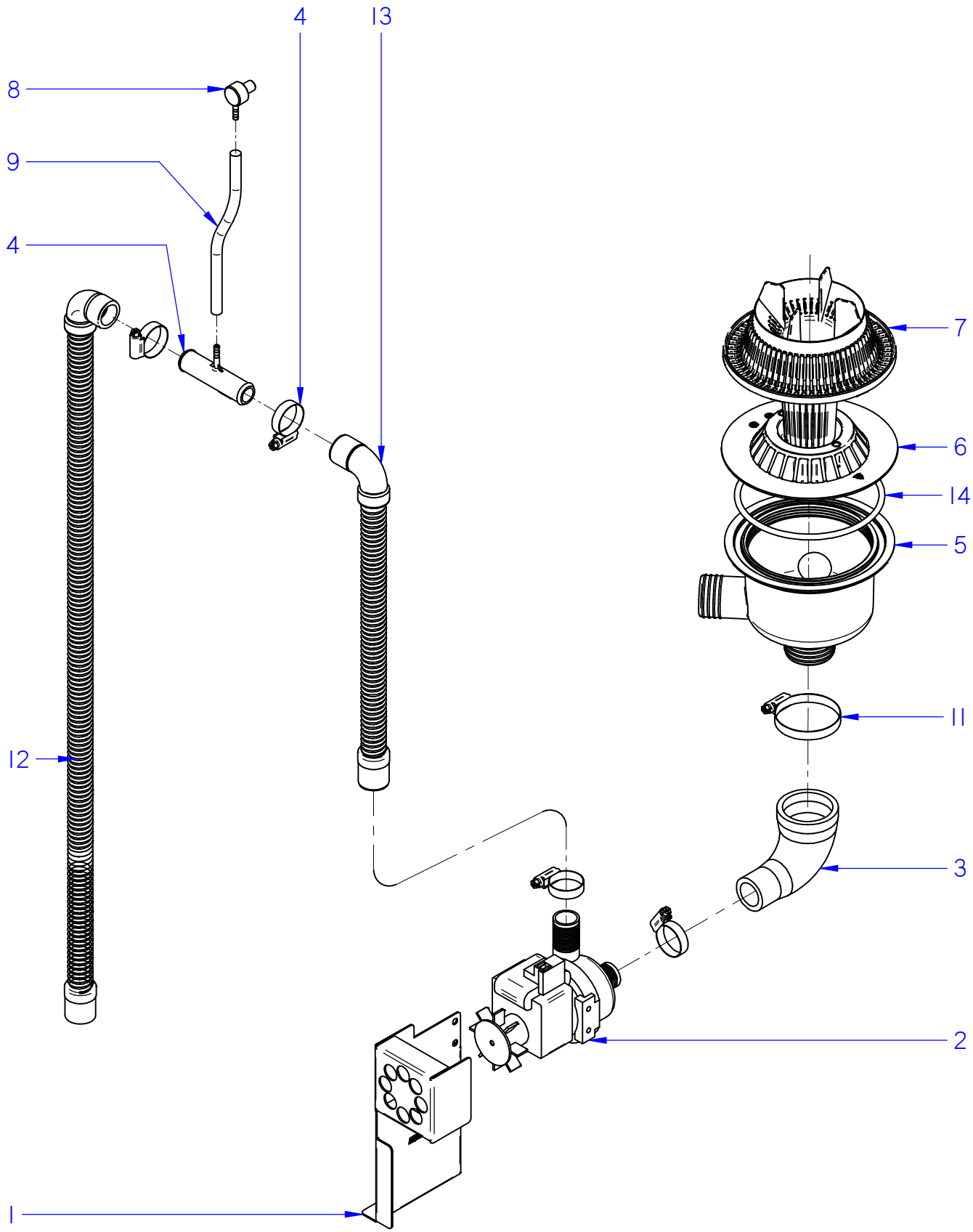

ITEM MARCADO EN COLOR = REPUESTO RECOMENDADO
COLOURED ITEM = RECOMMENDED SPARE PART

N plano / Drawing N.	Firma / Signature	Fecha / Date	Aparato / Appliance	Lamina / Sheet	
C-3275	Iban R.	06-2014	DESAGÜE / DRAINING PART LAVAVAJILLAS AD-125 DISHWASHER	4	Fagor Industrial S.Coop. FAGOR Oñate

ZONA / ZONE	DESAGÜE / DRAIN	LÁMINA / DRAWING	C-3275	FAGOR

ITEM	REFERENCIA REFERENCE	DENOMINACIÓN	DENOMINATION	AD-125							RECOMMENDED	ELIMINADO ELIMINATED	INTRODUCIDO INTRODUCED	NOTAS / NOTES
1	12048090	SOPORTE BOMBA DESAGÜE	DRAINING PUMP'S SUPPORT	1										
2	12023456	BOMBA DESAGUE	DRAINING PUMP	1							X			
3	12049606	CODO BOMBA DESAGÜE	DRAINING PUMP'S ELBOW	1										
4	12041519	EMPALME DESAGÜE	DRAINING JOINT	1										
5	12048037	CUBETA 2 BOMBAS CAPOTA	PASS-THROUGH 2 PUMPS PAIL	1										
6	12048039	AMARRE CUBETA CAPOTA	P-THROUGH. PAIL FASTENING	1										
7	12048095	BASE FILTRO ADVANCE CAPOTA	P-THROUGH. FILTER BASE	1										
8	12024531	INYECTOR DETERGENTE INOX	DETERGENT INJECTOR	1										
9	11000083	TUBO GOMA NEGRA D 17x10	D 17x10 BLACK RUBBER PIPE	1										
10	12010023	ABRAZADERA 20-32	20-32 CLAMP	4										
11	12009962	ABRAZADERA 40-60	40-60 CLAMP	1										
12	12041934	MANGUERA DESAGÜE	DRAINING PIPE	1							X			
13	12041936	MANGUERA DESAGÜE	DRAINING PIPE	1										
14	12048717	JUN. TORICA CUBETA O-126.35X5.33	PAIL'S O-RING O-126.35X5.33	1										

N plano / Drawing N.	Firma / Signature	Fecha / Date	Aparato / Appliance	ACLARADO / RINSE PART	Lamina / Sheet
C-3276	Iban R.	2015-01	LAVAVAJILLAS AD-125 DISHWASHER		5

Fagor Industrial S.Coop. Onate

ITEM MARCADO EN COLOR = REPUESTO RECOMENDADO
COLOURED ITEM = RECOMMENDED SPARE PART

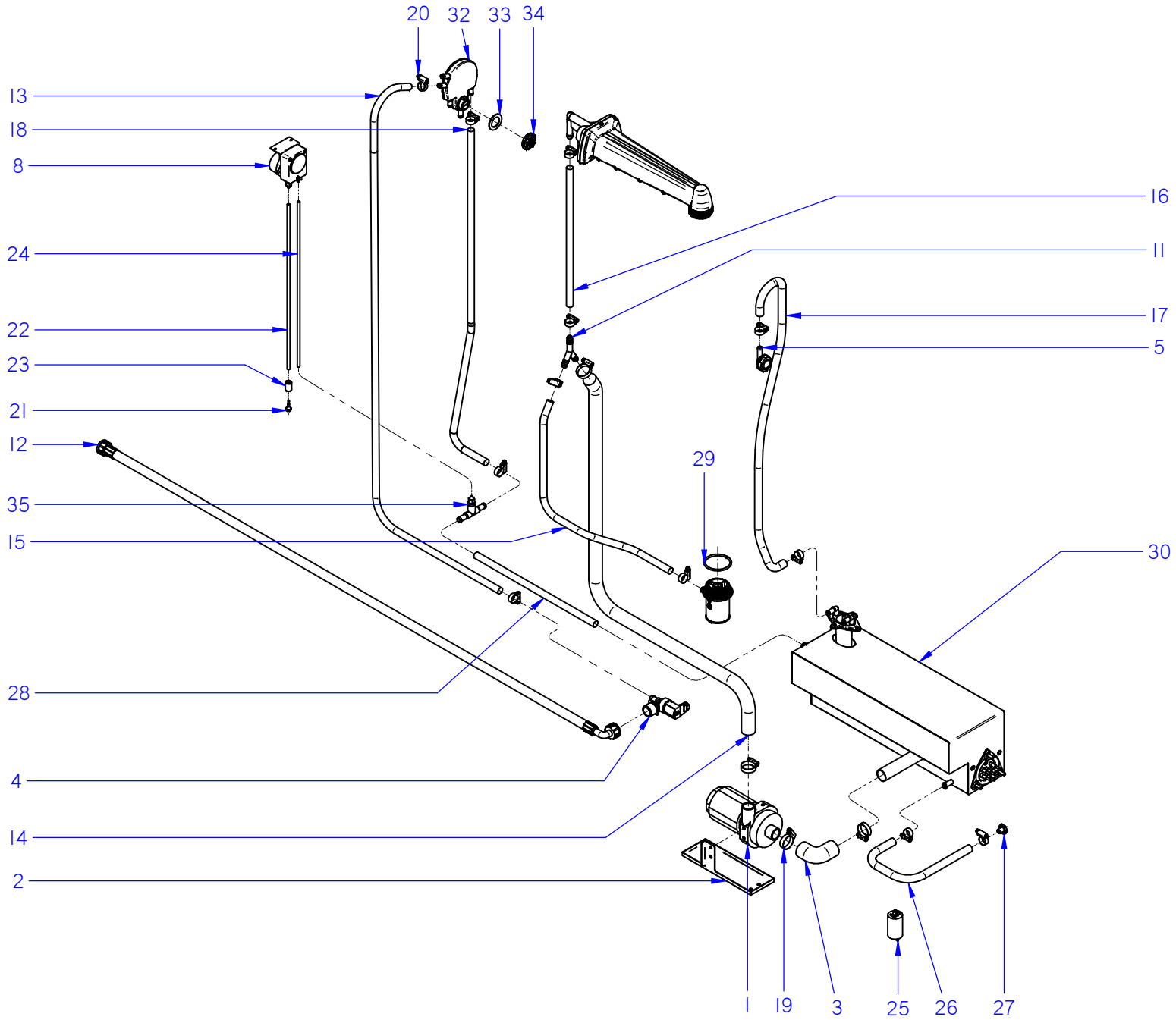

ZONA / ZONE	PARTE FUNCIONAL ACLARADO / FUNCTIONAL RINSE PART	LÁMINA / DRAWING	C-3276	FAGOR

ITEM	REFERENCIA REFERENCE	DENOMINACIÓN	DENOMINATION	AD-125							RECOMMENDED	ELIMINADO ELIMINATED	INTRODUCIDO INTRODUCED	NOTAS / NOTES
1	12024233	BOMBA ACLARADO HANNING	HANNING RINSING PUMP	1							X			
2	12110537	SOPORTE BOMBA ACLARADO	RINSING PUMP'S SUPPORT	1										
3	12041928	CONDUCTO CALDERIN-BOMBA	BOILER-PUMP HOSE	1										
4	12095427	E.V SIMPLE 220V SALIDA A 90º	SIMPLE E.V 90º EXIT	1							X			
5	12097453	CONDUCTO AIREACION CALDERIN	BOILER VENTILATION ELBOW	1										
8	12092198	DOSIFICADOR ABRILLANTADOR	RINSE DISPENSER	1							X			
11	12023511	RACORD EN Y	"Y" SHAPED RACCORD	1										
12	12024115	MANGUERA ENTRADA AGUA	WATER SUPPLY HOSE	1										
13	12114353	TUBO WRAS	WRAS PIPE	1										
14	12046080	COND. IMPULSION ACLARADO	RINSING EXPULSION PIPE	1										
15	11000083	TUBO GOMA NEGRA D 17x10	D 17x10 BLACK RUBBER PIPE	1										
16	11000083	TUBO GOMA NEGRA D 17x10	D 17x10 BLACK RUBBER PIPE	1										
17	11000083	TUBO GOMA NEGRA D 17x10	D 17x10 BLACK RUBBER PIPE	1										
18	12114353	TUBO WRAS	WRAS PIPE	1										
19	12010023	ABRAZADERA 20-32	20-32 CLAMP	4										
20	12010036	ABRAZADERA 12-20	12-20 CLAMP	14										
21	12011355	FILTRO ASPIRACION	SUCTION FILTER	1										
22	12024139	CONDUCTO ASPIRACIÓN AZKOY	AZKOY SUCTION PIPE	1										
23	12024353	PESO FILTRO	FILTER WEIGHT	1										
24	11000079	CONDUCTO DOSIF. TRANSP 6X4	DISPENSER TRANSPARENT PIPE	1										
25	12023600	CONDENSADOR 5 µF	5 µf CONDENSER	1							X			
26	11000083	TUBO GOMA NEGRA D 17x10	BLACK RUBBER PIPE D 17x10	1										
27	12041528	TAPON M10x1.5	M10x1.5 CAP	1										
28	11000083	TUBO GOMA NEGRA D 17x10	BLACK RUBBER PIPE D 17x10	1										
29	12049052	JUNTA 53,57x3,53 SOP DISTR. INF.	53,57x3,53 O-RING	1										
30	12091690	CALDERIN RECTANGULAR	SQUARE BOILER	1										
32	12091121	AIR BREAK	AIR BREAK	1							X			
33	12091122	JUNTA AIR BREAK	AIR BREAK'S SEAL	1										
34	12104339	TUERCA AIR BREAK	AIR BREAK'S NUT	1										
35	12040714	RACOR EN T ANTIRRETORNO	T FITTING NON-RETURN	1										

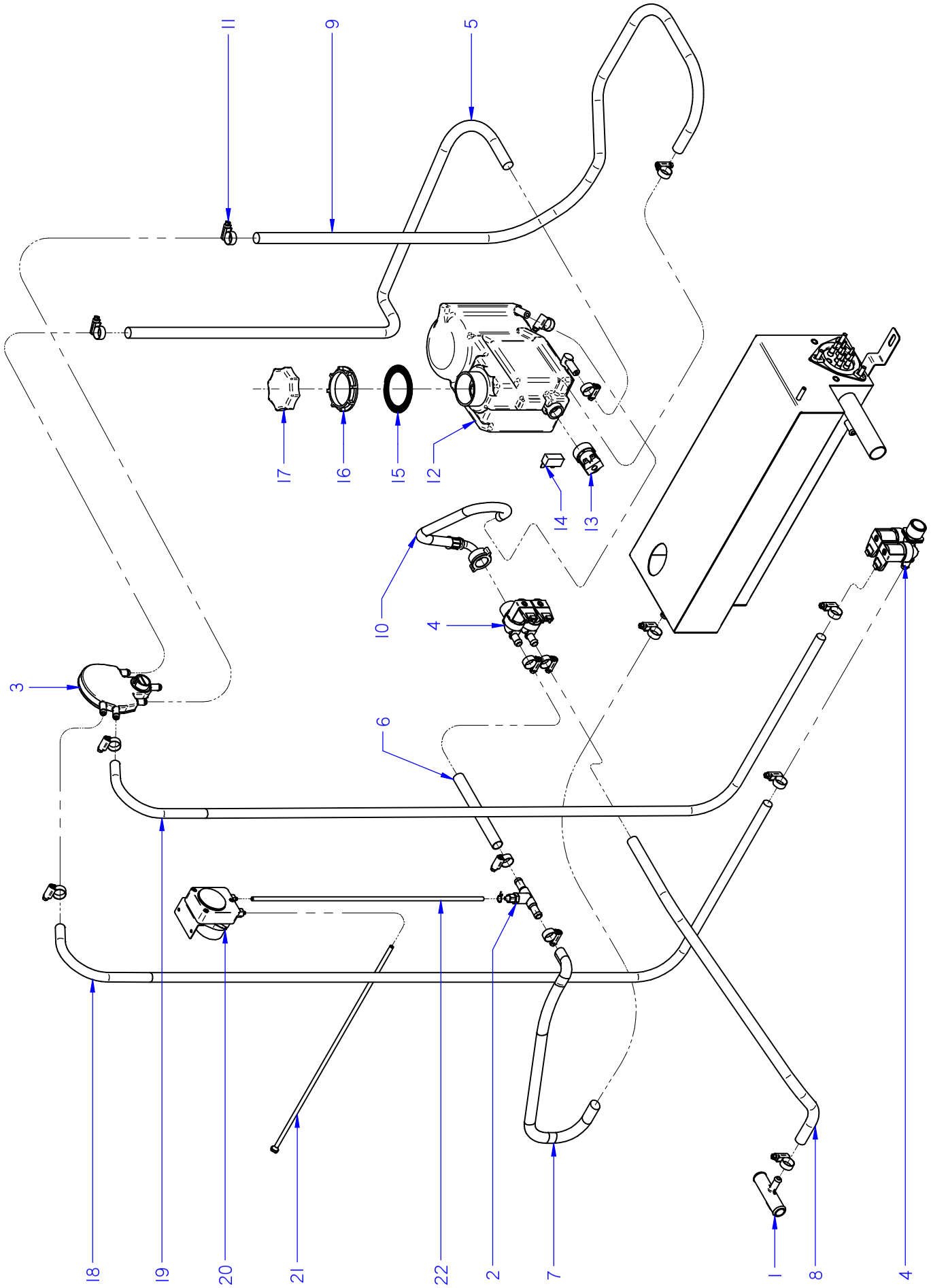

ITEM MARCADO EN COLOR = REPUESTO RECOMENDADO
COLOURED ITEM = RECOMMENDED SPARE PART

N plano / Drawing N.	Firma / Signature	Fecha / Date	Aparato / Appliance	Lamina
C-3277	Iban R.	2014-11	DESCALCIFICADOR / SOFTENER LAVAVAJILLAS AD-125 SOFT DISHWASHER	6

Fagor Industrial S.Coop. FAGOR
Oñate

ZONA / ZONE	PARTE FUNCIONAL ACLARADO SOFT / FUNCTIONAL RINSE PART SOFT	LÁMINA / DRAWING	C-3277	FAGOR

ITEM	REFERENCIA REFERENCE	DENOMINACIÓN	DENOMINATION	AD-125 SOFT							RECOMMENDED	ELIMINADO ELIMINATED	INTRODUCIDO INTRODUCED	NOTAS / NOTES
1	12041520	EMPALME DESCALCIF.- DESAGÜE	SOFTENER-DRAIN JOINT	1										
2	12040714	RACOR EN T ANTIRRETORNO	T FITTING NON-RETURN	1										
3	12091121	AIR BREAK	AIR BREAK	1							X			
4	12110531	E.V.DOBLE 220/240V 50/60Hz	DOUBLE EV 220/240V 50/60Hz	2							X			
5	12114353	TUBO WRAS	WRAS PIPE	1										
6	11000083	TUBO GOMA NEGRA D 17x10	D 17x10 BLACK RUBBER PIPE	1										
7	11000083	TUBO GOMA NEGRA D 17x10	D 17x10 BLACK RUBBER PIPE	1										
8	11000083	TUBO GOMA NEGRA D 17x10	D 17x10 BLACK RUBBER PIPE	1										
9	12114353	TUBO WRAS	WRAS PIPE	1										
10	12115441	MANGUERA DESCALCIF.- EV. DOBLE	SOFTENER_DOUBLE EV PIPE	1										
11	12010036	ABRAZADERA 12-20	12-20 CLAMP	15										
12	12044603	DESCALCIFICADOR COMPLETO	COMPLETE SOFTENER	1							X			
13	12044600	MEDIA ELECTROVÁLVULA	HALF ELECTROVALVE	1							X			
14	12044602	INTERRUPTOR SAL	SALT REED	1										
15	12045142	JUNTA DESCALCIFICADOR Ø74xØ54	SOFTENER SEAL Ø74xØ54	1										
16	12045143	AMARRE JUNTA DESCALCIFICADOR	SOFTENER SEAL FASTENER	1										
17	12045145	TAPÓN DESCALCIFICADOR	SOFTENER TAP	1										
18	12114353	TUBO WRAS	WRAS PIPE	1										
19	12114353	TUBO WRAS	WRAS PIPE	1										
20	12092198	DOSIFICADOR ABRILLANTADOR	RINSE DISPENSER	1							X			
21	12024139	CONDUCTO ASPIRACIÓN AZKOY	AZKOY SUCTION PIPE	1										
22	11000079	CONDUCTO DOSIF. TRANSP 6X4	DISPENSER TRANSPARENT PIPE	1										

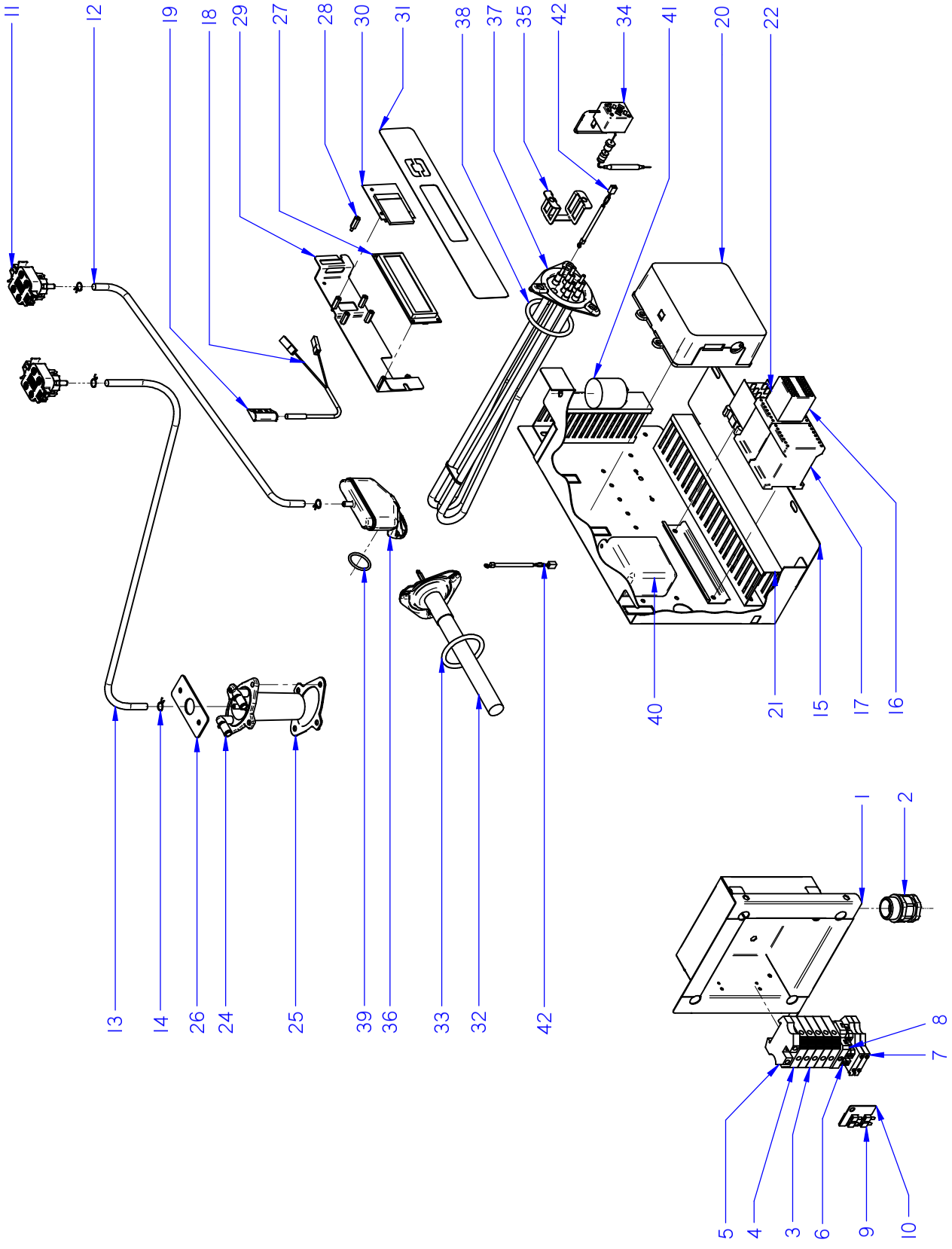

ITEM MARCADO EN COLOR = REPUESTO RECOMENDADO
COLOURED ITEM = RECOMMENDED SPARE PART

N plano / Drawing N.	Firma / Signature	Fecha / Date	Aparato / Appliance	Lamina / Sheet	
C-3278	Iban R.	2014-07	CONJUNTO ELECTRICO / ELECTRICAL PART LAVAVAJILLAS AD-125 DISHWASHER	7	Fagor Industrial S.Coop. FAGOR Onate

ZONA / ZONE	CONJUNTO ELECTRICO / ELECTRICAL PART	LÁMINA / DRAWING	C-3278	FAGOR

ITEM	REFERENCIA REFERENCE	DENOMINACIÓN	DENOMINATION	AD-125	AD-125 SOFT						RECOMMENDED	ELIMINADO ELIMINATED	INTRODUCIDO INTRODUCED	NOTAS / NOTES
1	12120601	BASE CAJA CONEXIONES	CONNECTIONS BOX BASE	1	1									
2	12009927	PRENSA ESTOPAS PG-21	PG-21 CABLE GLAND	1	1									
3	12023373	BORNES 10 WDU-10203.O	10 WDU-10203.O TERMINAL	3	3									
4	12025224	BORNA DE PASO AZUL	BLUE TERMINAL	2	2									
5	12024743	BORNE TIER 10 WPE-10103.O	EARTH TERMINAL	1	1									
6	12025180	REGLETA BORNAJE 2 PISOS	2 LEVEL CONNECTION STRIP	2	2									
7	12025158	BORNAS PORTA FUSIBLES	FUSE HOLDER TERMINALS	2	2									
8	12024199	TOPE FINAL	FINAL LIMIT	1	1									
9	12103361	CONECTOR 2 VIAS 10mm 57A	2 WAY CONNECTOR 57A	3	3									
10	12103535	SOPORTE CONECTORES 2 VIAS	2 WAY CONNECTOR'S SUPPORT	1	1									
11	12042019	PRESOSTATO SIMPLE 2 BAR.	2 BAR PRESSURE SWITCH	2	2						X			
12	11000066	TUBO GOMA NEGRO D 8x4	D 8x4 BLACK RUBBER PIPE	1	1									
13	11000066	TUBO GOMA NEGRO D 8x4	D 8x4 BLACK RUBBER PIPE	1	1									
14	12023707	BRIDA ELASTICA TUBO	ELASTIC CLAMP FOR PIPES	4	4									
15	12047752	BASE CUADRO ELECTRICO	ELECTRIAL PANEL'S BASE	1	1									
16	12123408	KIT CONTACTOR AUXILIAR 400V UL	KIT AUXILIARY CONTACTOR 400V UL	1	1						X			
17	12024040	CONTACTOR 230V 4VIAS UL	230V 4WAY UL CONTACTOR	2	2						X			
18	12024477	INTERRUPTOR MAGNETICO	MAGNETIC SWITCH	1	1						X			
19	12024066	AMARRE INTERRUP. MAGNETICO	MAGNETIC SWITCH'S SUPPORT	1	1									
20	12048024	CONTROL TARJETA 8 REL. UL	8 RELAY CONTROL CARD UL	1	1						X			
21	12047956	CANALETA UNEX 0.25	UNEX 0.25 CABLE CONDUIT	1	1									
22	12024011	CONTACTOR 16A 4VIA UL	16A 4VIA CONTACTOR UL	1	1						X			
23	12096408	CANALETA UNEX L-140	UNEX L-140 CABLE CONDUIT	1	1									
24	12091478	CAMPANA CALDERIN	BOILER'S PRESSURE CHAMBER	1	1						X			
25	12118822	JUNTA CAMPANA CALDERIN	BOILER'S P.CHAMBERS SEAL	1	1									
26	12101852	CHAPA REFUERZA CAMPANA	PRESS. CHAMBER STRENGTHENER	1	1									
27	12048027	VISUALIZADOR 12V DC 32 DIG.	12V DC 32 DIGITS DISPLAY	1	1						X			
28	12025260	DISTANCIADOR M3	M3 SPACER	7	7									
29	12049160	SOPORTE DISPLAY OLED	OLED DISPLAY SUPPORT	1	1									
30	12097036	BACKLIGHT	BACKLIGHT	1	1						X			
31	12087170	EMBELL. ADVANCE CAPOTA	ADV. PASS-THROUGH STICKER	1	1						X			

ZONA / ZONE	CONJUNTO ELECTRICO / ELECTRICAL PART	LÁMINA / DRAWING	C-3278	FAGOR

ITEM	REFERENCIA REFERENCE	DENOMINACIÓN	DENOMINATION	AD-125	AD-125 SOFT						RECOMMENDED	ELIMINADO ELIMINATED	INTRODUCIDO INTRODUCED	NOTAS / NOTES
32	12047457	RESISTENCIA 205MM SIMPLE UL	205MM SIMPLE RESISTOR UL	1	1						X			
33	12102062	JUNTA TÓRICA RESIS. TUBULAR	TUBULAR RESISTOR'S O-RING	1	1						X			
34	12023830	LIMITADOR TECASA P.	TECASA THERMOSTAT	1	1						X			
35	12022151	AMARRE LIMITADOR TECASA	TECASA THERMOST. SUPPORT	1	1									
36	12093146	CAMPANA TANQUE	TUB'S PRESSURE CHAMBER	1	1						X			
37	12092787	RESIST. 9KW 400MM TRIPLE UL	9kW 400MM TRIPLE RESISTOR	1	1						X			
38	12118319	JUNTA TÓRICA RESIS. CALDERIN	BOILER RESISTOR'S O-RING	1	1						X			
39	12093145	JUNTA TORICA CAMPANA	PRESSURE CHAMBER'S O-RING	1	1									
40	12120189	CONTROL TARJETA 12V DC 6 REL.	6 REALY 12V CONTROL CARD	_	1						X			
41	12104027	CONDENSADOR PARASIT 1A 0,47µF	PARASITIC CONDENSER 1A 0,47µF	1	1						X			
42	12025036	CONJUNTO SONDA 64kOHM NTC	64kOHM NTC THERMOSTAT	2	2									

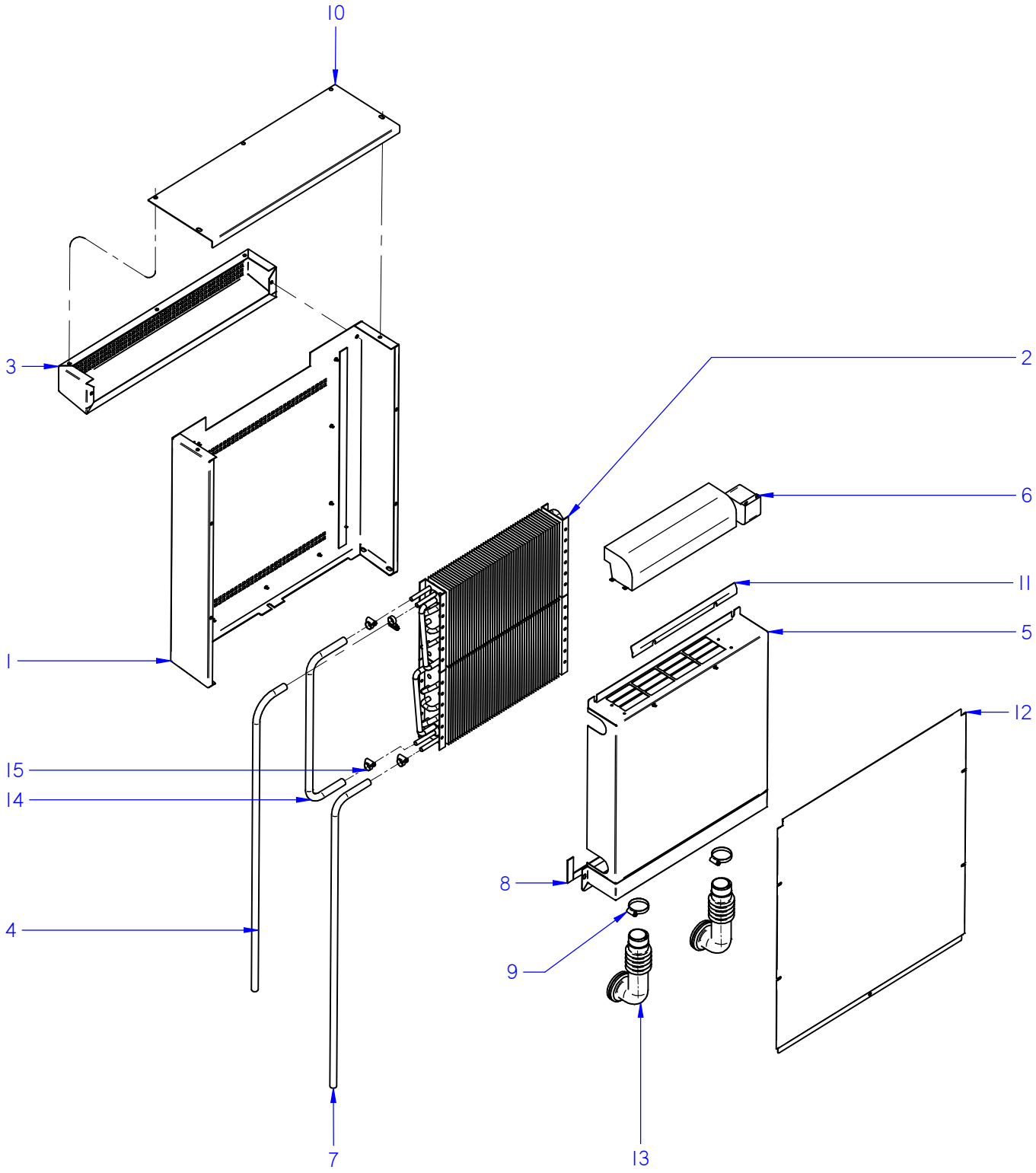

ITEM MARCADO EN COLOR = REPUESTO RECOMENDADO
COLOURED ITEM = RECOMMENDED SPARE PART

N plano / Drawing N.	Firma / Signature	Fecha / Date	Aparato / Appliance	Lamina / Sheet	
C-3279	Iban R.	06-2014	HEAT RECOVERING SYSTEM LAVAVAJILLAS AD-125 DISHWASHER	8	Fagor Industrial S.Coop. FAGOR Onate

ZONA / ZONE	SISTEMA DE RECUPERACIÓN DE CALOR / HEAT RECOVERING SYSTEM	LÁMINA / DRAWING	C-3279	FAGOR

ITEM	REFERENCIA REFERENCE	DENOMINACIÓN	DENOMINATION	AD-125 HRS							RECOMMENDED	ELIMINADO ELIMINATED	INTRODUCIDO INTRODUCED	NOTAS / NOTES
1	12120603	CUBIERTA EXTERIOR COMP. C.U.	C.U. EXTERNAL COVER	1										
2	12048309	SERPENTIN C.U.	C.U. COOLING COIL	2							X			
3	12120604	BISERA REJILLA C.U.	C.U. GRILLED CAP	1										
4	11000083	CONDUCTO HRS - AIRBREAK	HRS - AIRBREAK PIPE	1										
5	12048319	CUBIERTA INTERIOR COMPL. C.U.	C.U. INNER COVER COPLETE	1										
6	12048323	VENTILADOR TANGENCIAL C.U.	C.U. TANGENTIAL FAN	1										
7	11000083	CODUCTO EV - HRS	EV - HRS PIPE	1										
8	12111218	JUNTA LAVAVAJILLAS HRS	HRS DISHWASHER GASKET	1										
9	12009986	ABRAZADERA DIN 3017 W2 32-50L	DIN 3017 W2 32-50L CLAMP	2										
10	12048344	TAPA SUPERIOR C.U.	C.U. TOP COVER	1										
11	12048343	CHAPA DE AIRE C.U.	C.U. AIR SHEET	1										
12	12120605	TAPA POSTERIOR C.U.	C.U. BACK COVER	1										
13	12111213	CODO ENTRADA VAPOR HRS	HRS STEAM INLET ELBOW	2										
14	11000083	TUBO UNIÓN SERPENTINES	COOLING COILS CONNECTION PIPE	1										
15	12010036	ABRAZADERA 12-20	12-20 CLAMP	4										

ZONA / ZONE	VARIOS / VARIOUS		LÁMINA / DRAWING		FAGOR

ITEM	REFERENCIA REFERENCE	DENOMINACIÓN	DENOMINATION	AD-125	AD-125 SOFT	AD-125 HRS					RECOMMENDED	ELIMINADO ELIMINATED	INTRODUCIDO INTRODUCED	NOTAS / NOTES
	12048030	CABLEADO PARALELO GICAR	PARALLEL WIRING GICAR	2	2	2								
	12009946	CABLEADO TENSOR	TENSIONER WIRING	1	1	1								
	12119237	CABLEADO HRS EVAD 120	HRS EVAD 120 WIRING	_	_	1								
	12104176	CABLEADO FILTRO ANTIPARASIT.	ANTIPARASITIC FILTER'S WIRING	1	1	1								
	12119811	INSTALACIÓN ELÉCTR. 80,120,EVAD	80,120,EVAD ELECTRICAL WIRING	1	1	1								
	12110683	CLIP ANTI-TIRONES CABLEADO	ANTI-PULLING CLIP	1	1	1								
	12120149	CABLEADO REGENARACION ADP 120	REGENERATION WIRING ADP 120	_	1	_								
	12048032	CABLEADO PARALELO GICAR 6 VIAS	PARALLEL WIRING GICAR 6 WAYS	_	1	_								
	12120162	CABLEADO REGENARACION ADP 64	REGENERATION WIRING ADP 64	_	1	_								
	12120166	CABL. ADAPTADOR H 6,3 A RAST 5	H 6,3 A RAST 5 ADAPTER WIRING	_	1	_								

ZONA / ZONE	RECOMENDADOS / RECOMMENDED	LÁMINA / DRAWING	FAGOR

ITEM	REFERENCIA REFERENCE	DENOMINACIÓN	DENOMINATION	AD-125	AD-125 SOFT	AD-125 HRS						ELIMINADO ELIMINATED	INTRODUCIDO INTRODUCED	NOTAS / NOTES
2	12043287	MOTOBOMBA 590KW 50Hz	WASHIG PUMP 590KW 50Hz	2	2	2								C-3274
2	12102834	MOTOBOMBA 590KW 60Hz	WASHIG PUMP 590KW 60Hz	2	2	2								C-3274
9	12024216	DOSIF. DGTE REGULABLE G300	DETERG. REGUL. DISPENSER	1	1	1								C-3274
25	12024376	CONDENSADOR 10MF	10MF CONDENSER	2	2	2								C-3274
2	12023456	BOMBA DESAGUE	DRAINING PUMP	1	1	1								C-3275
12	12041934	MANGUERA DESAGÜE	DRAINING PIPE	1	1	1								C-3275
1	12024233	BOMBA ACLARADO HANNING	HANNING RINSING PUMP	1	1	1								C-3276
4	12095427	E.V SIMPLE 220V SALIDA A 90º	SIMPLE E.V 90º EXIT	1	_	1								C-3276
8	12092198	DOSIFICADOR ABRILLANTADOR	RINSE DISPENSER	1	1	1								C-3276
25	12023600	CONDENSADOR 5 µF	5 µf CONDENSER	1	1	1								C-3276
32	12091121	AIR BREAK	AIR BREAK	1	1	1								C-3276
4	12110531	E.V.DOBLE 220/240V 50/60Hz	DOUBLE EV 220/240V 50/60Hz	_	2	_								C-3277
12	12044603	DESCALCIFICADOR COMPLETO	COMPLETE SOFTENER	_	1	_								C-3277
13	12044600	MEDIA ELECTROVÁLVULA	HALF ELECTROVALVE	_	1	_								C-3277
11	12042019	PRESOSTATO SIMPLE 2 BAR.	2 BAR PRESSURE SWITCH	2	2	1								C-3278
16	12123408	KIT CONTACTOR AUXILIAR 400V UL	KIT AUXILIARY CONTACTOR 400V UL	1	1	1								C-3278
17	12024040	CONTACTOR 230V 4VIAS UL	230V 4WAY UL CONTACTOR	1	2	1								C-3278
18	12024477	INTERRUPTOR MAGNETICO	MAGNETIC SWITCH	1	1	1								C-3278
20	12048024	CONTROL TARJETA 8 REL. UL	8 RELAY CONTROL CARD UL	1	1	1								C-3278
22	12024011	CONTACTOR 16A 4VIA UL	16A 4VIA CONTACTOR UL	1	1	1								C-3278
24	12091478	CAMPANA CALDERIN	BOILER'S PRESSURE CHAMBER	1	1	1								C-3278
27	12048027	VISUALIZADOR 12V DC 32 DIG.	12V DC 32 DIGITS DISPLAY	1	1	1								C-3278
30	12097036	BACKLIGHT	BACKLIGHT	1	1	1								C-3278
31	12087170	EMBELL. ADVANCE CAPOTA	ADV. PASS-THROUGH STICKER	1	_	1								C-3278
32	12047457	RESISTENCIA 205MM SIMPLE UL	205MM SIMPLE RESISTOR UL	1	1	1								C-3278
33	12102062	JUNTA TÓRICA RESIS. TUBULAR	TUBULAR RESISTOR'S O-RING	1	1	1								C-3278
34	12023830	LIMITADOR TECASA P.	TECASA THERMOSTAT	1	1	1								C-3278
36	12093146	CAMPANA TANQUE	TUB'S PRESSURE CHAMBER	1	1	1								C-3278
37	12092787	RESIST. 9KW 400MM TRIPLE UL	9kW 400MM TRIPLE RESISTOR	1	1	1								C-3278
38	12118319	JUNTA TÓRICA RESIS. CALDERIN	BOILER RESISTOR'S O-RING	1	1	1								C-3278
40	12120189	CONTROL TARJETA 12V DC 6 REL.	6 REALY 12V CONTROL CARD	_	1	_								C-3278

ZONA / ZONE	RECOMENDADOS / RECOMMENDED		LÁMINA / DRAWING		FAGOR

ITEM	REFERENCIA REFERENCE	DENOMINACIÓN	DENOMINATION	AD-125	AD-125 SOFT	AD-125 HRS						ELIMINADO ELIMINATED	INTRODUCIDO INTRODUCED	NOTAS / NOTES
41	12104027	CONDENSADOR PARASIT 1A 0,47µF	PARASITIC CONDENSER 1A 0,47µF	1	1	1								C-3278
2	12048309	SERPENTIN C.U.	C.U. COOLING COIL	_	_	2								C-3279

AD 125

①	12087213
②	12087213
③	12088538
④	12048612
Prensa estopas	12009927
Esquema teorico	12103187
Indicador de componentes	12022162
Leyenda	12103338

Nota:Todos los cables hembra que queden sin conectar se les colocaran una funda macho Q-578006

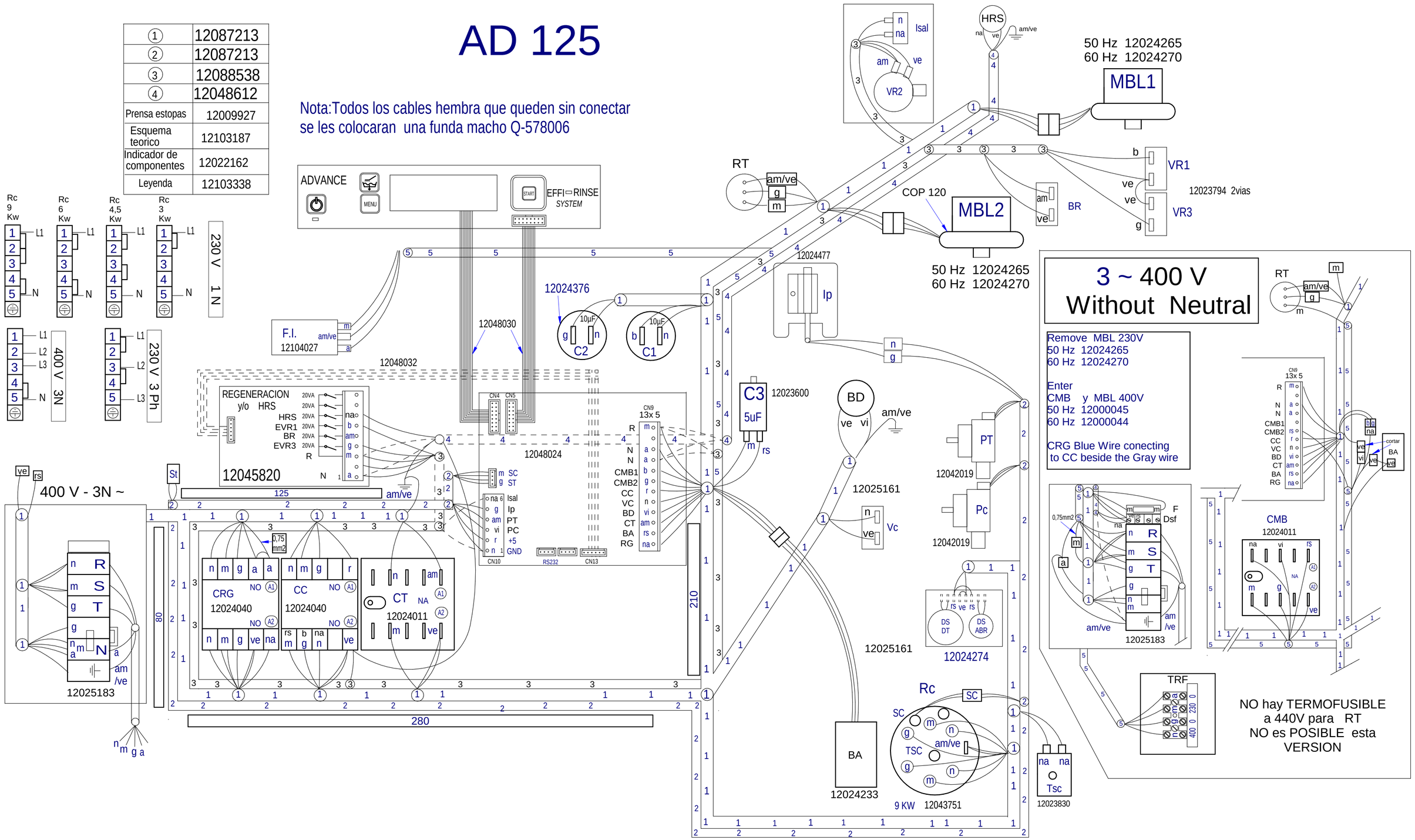

-	AD-125 400/230/230V 3N/3/1N 50Hz	-	12048977		
Nº	TITLE	QTY	CODE	MATERIAL	TREATMENT

GENERAL TOLERANCES: ISO 2768-1 Very Coarse

LINEAR	Fine	Medium	Coarse	Very Coarse
<3mm	±0.05	±0.10	±0.15	
3-6mm	±0.05	±0.10	±0.20	
6-30mm	±0.10	±0.20	±0.50	
30-120mm	±0.15	±0.30	±0.80	
120-400mm	±0.20	±0.50	±1.20	
400-1000mm	±0.30	±0.80	±2.00	
1000-2000mm	±0.50	±1.20	±3.00	

ANGULAR	Fine	Medium	Coarse	Very Coarse
<10mm	±1°	±1°30'	±3°	
10-50mm	±30'	±1°	±2°	
50-120mm	±20'	±30'	±1°	
120-400mm	±10'	±15'	±30'	
>400mm	±5'	±10'	±20'	

GENERAL TOLERANCE FOR FORM AND POSITION: ISO 2768-2

FAGOR
FAGOR INDUSTRIAL

DESIGNED BY	VALIDATED BY	DATE
M.MAILLO		21.02.2013

SHEET FORMAT:	A2
DESING CENTER:	ONA
MAT STATUS:	
DOC STATUS:	
SHEET:	1 / 1
SCALE:	

12048977

REVISION

LJ100430

PROPOSED BY:

ISSUE DATE:

AD 505, 125

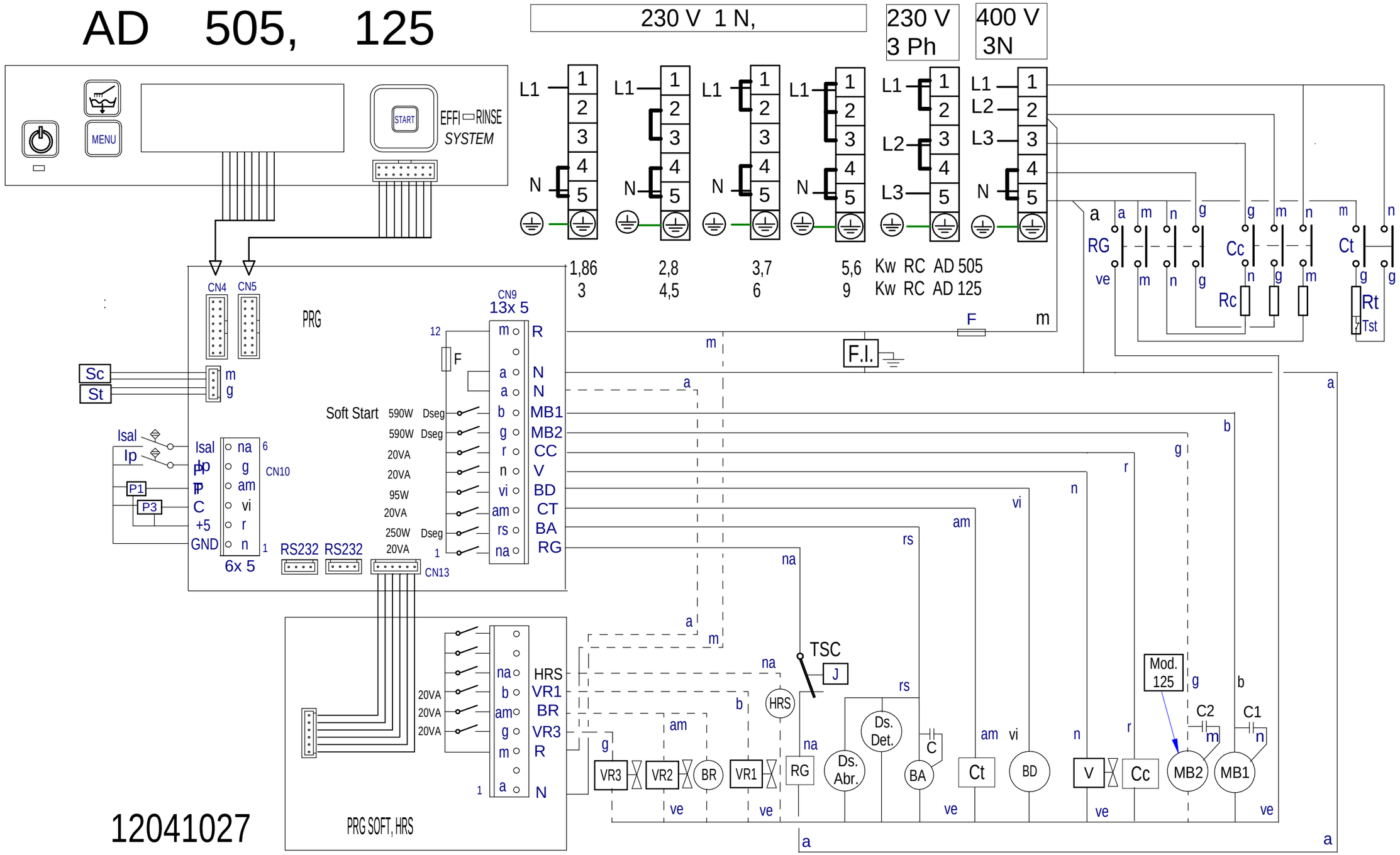

12041027

-	Esquema Teorico AD 505, 125	-	12041027		
Nº	TITLE	QTY	CODE	MATERIAL	TREATMENT

GENERAL TOLERANCES: ISO 2768-1 Very Coarse

LINEAR	Fine	Medium	Coarse	Very Coarse
<3mm	±0.05	±0.10	±0.15	
3-6mm	±0.05	±0.10	±0.20	
6-30mm	±0.10	±0.20	±0.50	
30-120mm	±0.15	±0.30	±0.80	
120-400mm	±0.20	±0.50	±1.20	
400-1000mm	±0.30	±0.80	±2.00	
1000-2000mm	±0.50	±1.20	±3.00	

ANGULAR	Fine	Medium	Coarse	Very Coarse
<10mm	±1º		±1º30'	±3º
10-50mm	±30'		±1º	±2º
50-120mm	±20'		±30'	±1º
120-400mm	±10'		±15'	±30'
>400mm	±5'		±10'	±20'

GENERAL TOLERANCE FOR FORM AND POSITION: ISO 2768-2

LAVAVAJILLAS

FAGOR INDUSTRIAL

DESIGNED BY	VALIDATED BY	DATE
M.MAILLO	X.Iruretagoyena	21.01.2015

SHEET FORMAT:	A3
DESING CENTER:	ONA
MAT STATUS:	
DOC STATUS:	
SHEET:	1 / 1
SCALE:	

12041027

REVISION

PROPOSED BY: M.MAILLO ISSUE DATE:

LEYENDA APERTURA FRONTAL Y CAPOTA

	ESPAÑOL	ENGLISH	FRANÇAIS	DEUTSCH	ITALIANO	中文
Ⓐ Ⓑ	Puntos de conexion con R	Conecction point with R	Points de conexion R	Anschlußpunkte mit R	Punti di collegamento con R	带R接触点
BA	Bomba Aclarado	Rinse pump				
BD	Bomba desagüe	Drain pump	Pompe de vidange	Abflußpumpe	Pompa scarico	排水泵
C1, C2, C3	Condensador	Condenser	Condensateur	Kondensator	Condensatore	电容
CMB	Contactor bomba lavado	Wash pump contactor	Contacteur pompe lavage	Türrelais	Contattore pompa lavaggio	清洗泵接触器
Cc	Contactor calentamiento calderin	Boiler heating contactor	Contacteur chauf. surchauffeur	Kontaktschütz Waschpumpe	Contattore riscaldamento boiler	升温箱加热接触器
Ct	Contactor calentamiento tanque	Tank heating contactor	Contacteur chaufage cuve	Kontaktschütz Boilerheizung	Contattore riscaldamento serbatoio	水箱加热接触器
CP	Rele puerta	Door relay	Relais porte	Kontaktschütz Heizung Tank	Rele porta	门继电器
Ds.	Dosificador	Detergent doser	Dosseur	Dosierer Spülmittel	Dosatore detersivo	清洗剂药液泵
E.B	Electrobomba de presion	Electric pressure pump	Electropompe de pression	Elektro-Drucksteigungspumpe	Electropompa pressione	电子压力泵
IG	Interruptor general	Main switch	Interrupteur general	Hauptschalter	Interruttore generale	主开关
IP	Micro puerta	Door microswitch	Micro porte	Mikroschalter Tür	Micro porta	门磁开关
H1	Piloto de encendido	Operation light	Voyant funcionement	Betriebsanzeigelampe	Spia accensione	运行指示灯
H2	Piloto marcha	Start light	Voyant demarrage	Startanzeigelampe	Spia avvio	开始指示灯
H3	Piloto maquina preparada	Light machine ready	Voyant machine prêt	Betriebsbereitschaftsanzeigelampe	Pilota macchina preparata	加热完成 指示灯
HSal	Piloto falta de Sal	Light Lack of Salt				
MB1, MB2	Bomba lavado	Wash pump	Pompe lavage	Waschpumpe	Pompa lavaggio	清洗泵
M	Motor programador	Motor programmer	Moteur du programmateur	Motor Programmiervorrichtung	Motore programmatore	程序电机
M Av. R	Motor program. avance rapido	Motor program. rapid advance	Moteur du progr.avance rapide	Motor Programmiervorrich. Betrieb	Motore programmatore avanzamento rapido	程序电机. 高速高级
M1	Micro programador marcha	Micro programmer on	Micro du programm. de marche	Motor Programmiervorrich. Waschen	Micro programma. di funzionamento	微程序 开
M2	Micro programador lavado	Micro programmer wash	Micro du programm. de lavage	Motor Programmiervorrich. Spülen	Micro programmatore di lavaggio	微程序 清洗
M3	Micro programador aclarado	Micro programmer rinse	Micro du programm. de rinçage	Motor Programmiervorrich. Vorlauf	Micro programmatore di risciacquo	微程序 喷淋
M4, M5	Micro programador avance	Micro programmer advance	Micro du programm. avance	Motor Programmiervorrich. schneller Vorlauf	Micro programmatore avanzamento	微程序 高级
P1, P3	Presostato	Pressure switch	Pressostat	Druckwächter	Pressostato	压力开关
P2	Presostato limitador	Hi-limit pressure switch	Pressostat de securité	Begrenzer Druckwächter	Pressostato limitatore	高水位限制 压力开关
R	Rele de Generador de A.C.	Generator relay	Relais du Generateur	Relais Generator	Rele Generatore	热水供应器继电器
RG	Rele General	Main Relay		Stromversorgungsanschluß Gener.		
Ⓛ1 Ⓛ2 Ⓛ3 Ⓝ	Alimentac. Generador A.C.	Water heater feeding	Alimentation generateur		Alimentazione generatore	热水供应器电源线
RC	Resistencia calderin	Boiler heating element	Resistance surchauffeur	Heizwiderstand Boiler	Resistenza boiler	升温箱加热管
RT	Resistencia tanque	Tank heater	Resistance cuve	Heizwiderstand Tank	Resistenza serbatoio	水箱加热管
Tt	Termostato tanque	Tank thermostat	Thermostat de cuve	Thermostat Tank	Termostato serbatoio	水箱温控器
TC	Termostato calderin	Boiler thermostat	Thermostat surchauffeur	Thermostat kessel	Termostato boiler	升温箱温控器
Tst	Limitador tanque	Tank limiter	Limitateur de cuve	Begrenzer Tank	Limitatore serbatoio	水箱安全温控器
TSC	Limitador calderin	Boiler Hi-limit	Limiteur surchauffeur	Begrenzer Boiler	Limitatore boiler	升温箱安全温控器
TSTP	Termostato termo-stop	Termo-stop Thermostat	Thermostat Termo-stop	Thermostat Termo-stop	Termostato Termo-stop	温度停止温控器
V	Electrovalvula llenado y aclarado	Fill and rinse valve	Electrovan. remplissage rinçage	Elektroventil Füllen und Spülen	Elettroval. riempimento e risciacquo	电磁阀
Vf	Electrovalvula Aclarado Frio	Cold Water rinse valve				
VR1, VR2, VR3, BR	Electrovalvula Descalcificacion	Soft Water valve				
VE,	Ventilador cuadro electrico	Switchboard fan	Ventilateur tableau electrique	Schalttafelventilator	Ventilatore quadro elettrico	风机
HRS	Sistema recuperacion energia	Heat Recovery System				

COLOR	COLORES	COLOUR	COULEURS	FARBEN	COLORE	颜色
a = BLU =	Azul	Blue	Bleu	Blau	Blu	蓝
am = YEL =	Amarillo	Yellow	Jaune	Gelb	Giallo	黄
am/ve = YEL/GRN	Amarillo/verde	Yellow / green	Jaune / vert	Gelb/grün	Giallo/verde	黄/绿
b = WHT =	Blanco	White	Blanc	Weiß	Bianco	白
g = GRY =	Gris	Grey	Gris	Grau	Grigio	灰
m = BRN =	Marrón	Brown	Marron	Braun	Marrone	棕
n = BLK =	Negro	Black	Noir	Schwarz	Nero	黑
na = ORG =	Naranja	Orange	Orange	Orange	Arancio	橙
r = RED =	Rojo	Red	Rouge	Rot	Rosso	红
rs = PNK =	Rosa	Pink	Rose	Rosa	Roseo	粉
ve = GRN =	Verde	Green	Vert	Grün	Verde	绿
vi = PRP =	Violeta	Purple	Violet	Violett	Viola	紫

12103338