DESPIECE TECNICO

# Lavavajillas de arrastre modular
# Lave-vaisselle d' avancement modulaire
# Rack modular conveyor dishwasher
# Modular korbtransport geschirrspüler
# Lavastoviglie a trascinamento modulari
# Lava-louças de arrratre molular

**Modelos:**

**FI-280**
**FI-370**
**FI-460**
**FI-550**
**ECO-280**
**ECO-370**
**ECO-460**
**ECO-550**

***Octubre 2008 October***

***Revisado Enero 2014 January Revised***

FAGOR

FAGOR INDUSTRIAL

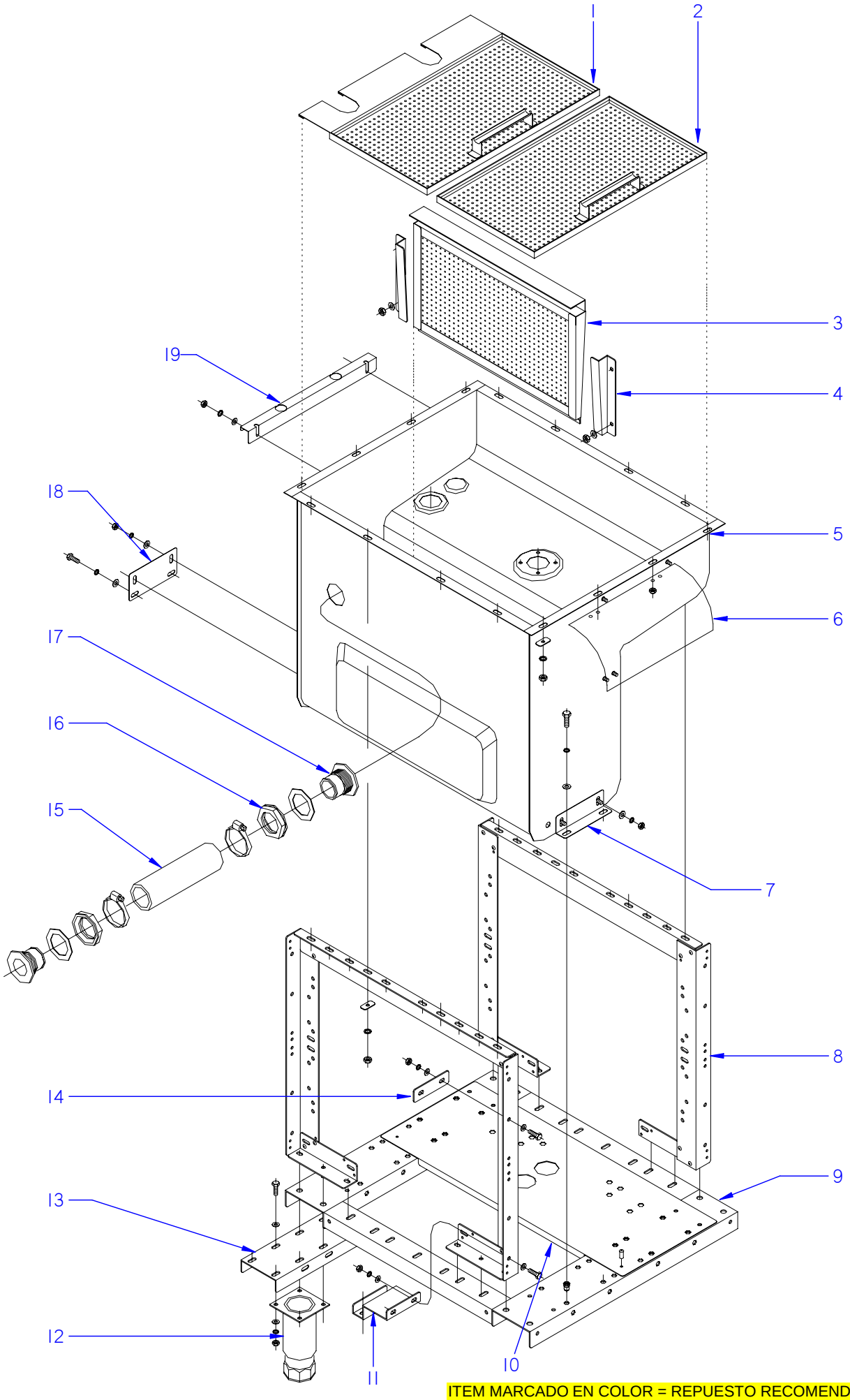


ITEM MARCADO EN COLOR = REPUESTO RECOMENDADO
COLOURED ITEM = RECOMMENDED SPARE PART

| N plano | Firma | Fecha | Aparato | Lamina | |
|---|---|---|---|---|---|
| C-2140 | | 2008-11 | ARMAZON Y CUBA DE PRELAVADO<br>LAVAVAJILLAS MODULARES | 1 | Fagor Industrial S.Coop. FAGOR<br>Oñate |

| MOD. | LAVAVAJILLAS MODULARES<br>MODULAR DISHWASHERS | ZONA | ARMAZON Y CUBA DE PRELAVADO<br>PRERINSE TUB AND FRAME | PLANO | C-2140 |
|---|---|---|---|---|---|

| ITEM | CODIGO | DENOMINACION | TEXTO | FI-370 I<br>ECO-370 I | FI-370 D<br>ECO-370 D | FI-550 I<br>ECO-550 I | FI-550 D<br>ECO-550 D | | | | NOTAS |
|---|---|---|---|---|---|---|---|---|---|---|---|
| 1 | Z330821000 | BANDEJA PRELAV. POSTER. IZDA | PREWASH TRAY REAR LEFT | 1 | _ | 1 | _ | | | | |
| 1 | Z330823000 | BANDEJA PRELAV. POSTER. DCHO | PREWASH TRAY REAR RIGHT | _ | 1 | _ | 1 | | | | |
| 2 | Z330803000 | BANDEJA PRELAVADO COMPLETA | COMPLETE PREWASH TRAY | 1 | 1 | 1 | 1 | | | | |
| 3 | Z710907000 | FILTRO COMPLETO | COMPLETE FILTER | 1 | 1 | 1 | 1 | | | | ELIMINADO 18.02.2013 |
| 3 | 12048626 | FILTRO | FILTER | 1 | 1 | 1 | 1 | | | | INTRODUCIDO 18.02.2013 |
| 4 | Z710309000 | GUIA FILTRO ANTERIOR | FRONT FILTER GUIDE | 1 | 1 | 1 | 1 | | | | |
| S/Nº | Z710310000 | GUIA FILTRO POSTERIOR | REAR FILTER GUIDE | 1 | 1 | 1 | 1 | | | | |
| | Q162040000 | TUERCA EXAGONAL M6 | HEXAGONAL NUT M6 | 4 | 4 | 4 | 4 | | | | |
| 5 | Z330420000 | CUBA PRELAVADO SOLDADA | PREWASH TUB WELDED | 1 | 1 | 1 | 1 | | | | |
| | Z310341000 | ARANDELA RECTANGULAR | RECTANGULAR WASHER | 16 | 16 | 16 | 16 | | | | |
| | Q262040000 | ARANDELA GROW. A6 A.304 | WASHER GROW. A6 A.304 | 16 | 16 | 16 | 16 | | | | |
| | Q162040000 | TUERCA EXAGONAL M6 | HEXAGONAL NUT M6 | 16 | 16 | 16 | 16 | | | | |
| 6 | Z313041000 | CUBIERTA COMPONENTES | COMPONENT COVER | 1 | 1 | 1 | 1 | | | | |
| 7 | Z270324000 | AMARRE CUBA ANTERIOR | FRONT TUB FASTENING | 1 | 1 | 1 | 1 | | | | |
| 8 | Z310104000 | SOPOR. CUBA LAVADO MONTADO | WASH TUB SUPPORT MOUNTED | 2 | 2 | 2 | 2 | | | | |
| | Q012043000 | TORNILLO EXAGONAL M6X20 | HEXAGONAL BOLT M6x20 | 11 | 11 | 11 | 11 | | | | |
| | Q012043000 | TORNILLO EXAGONAL M6X20 | HEXAGONAL BOLT M6x20 | 24 | 24 | 24 | 24 | | | | |
| | Q302022000 | ARANDELA 16X6X1.2 A.304 | WASHER 16X6X1.2 A.304 | 70 | 70 | 70 | 70 | | | | |
| | Q162040000 | TUERCA EXAGONAL M6 | HEXAGONAL NUT M6 | 35 | 35 | 35 | 35 | | | | |
| | Q262040000 | ARANDELA GROW. A6 A.304 | WASHER GROW. A6 A.304 | 35 | 35 | 35 | 35 | | | | |
| 9 | Z330101000 | ARMAZON PRELAVADO SOLDADO | PREWASH FRAME WELDED | 1 | 1 | 1 | 1 | | | | |
| 10 | Z330111000 | PANEL TRANSVERSAL PRELAVAD. | PREWASH TRANSVERSAL PANE | 1 | 1 | 1 | 1 | | | | |
| | Q411304000 | REMACHE AVIBULB Ø4,8 | AVIBULB RIVET Ø4.8 | 2 | 2 | 2 | 2 | | | | |
| 11 | Z330104000 | REFUERZO ARMAZON | FRAME REINFORCEMENT | 2 | 2 | 2 | 2 | | | | |
| 12 | X260151000 | PATA REGULABLE | ADJUSTABLE LEG | 4 | 4 | 4 | 4 | | | | |
| 13 | Z330103000 | SOPORTE PATA | LEG SUPPORT | 2 | 2 | 2 | 2 | | | | |
| 14 | Z330105000 | EMPALME ARMAZON | FRAME CONNECTION | 2 | 2 | 2 | 2 | | | | |
| 15 | Z330906000 | MANGUERA COMUNICACION | COMMUNICATION HOSE | 1 | 1 | 1 | 1 | | | | |
| | Q881324000 | ABRAZADERA 50-70L | CLAMP 50-70L | 2 | 2 | 2 | 2 | | | | |
| 16 | Z702101000 | TUERCA R.11/2 DELRIN | R.11/2 DELRIN NUT | 2 | 2 | 2 | 2 | | | | |
| | Q307009000 | ARANDELA 70X48X1.5 | WASHER 70X48X1.5 | 2 | 2 | 2 | 2 | | | | |

| MOD. | LAVAVAJILLAS MODULARES<br>MODULAR DISHWASHERS | ZONA | ARMAZON Y CUBA DE PRELAVADO<br>PRERINSE TUB AND FRAME | PLANO | C-2140 |
|---|---|---|---|---|---|

| ITEM | CODIGO | DENOMINACION | TEXTO | FI-370 I<br>ECO-370 I | FI-370 D<br>ECO-370 D | FI-550 I<br>ECO-550 I | FI-550 D<br>ECO-550 D | | | | NOTAS |
|---|---|---|---|---|---|---|---|---|---|---|---|
| 17 | Z330901000 | PASAMUROS COMUNICACION | COMMUNICATION BUSHING | 2 | 2 | 2 | 2 | | | | |
| 18 | Z270325000 | AMARRE CUBA POSTERIOR | REAR TUB FASTENING | 1 | 1 | 1 | 1 | | | | |
| | Q302022000 | ARANDELA 16X6X1.2 A.304 | WASHER 16X6X1.2 A.304 | 8 | 8 | 8 | 8 | | | | |
| | Q262040000 | ARANDELA GROW. A6 A.304 | WASHER GROW. A6 A.304 | 8 | 8 | 8 | 8 | | | | |
| | Q162040000 | TUERCA EXAGONAL M6 | HEXAGONAL NUT M6 | 8 | 8 | 8 | 8 | | | | |
| | Q012042000 | TORNILLO EXAGONAL M6X15 | HEXAGONAL BOLT M6x15 | 4 | 4 | 4 | 4 | | | | |
| 19 | Z332906000 | SOPORTE PANEL PRELAVADO | PREWASH PANEL SUPPORT | 1 | 1 | 1 | 1 | | | | |
| | Q232050000 | ARANDELA A6 | WASHER A6 | 2 | 2 | 2 | 2 | | | | |
| | Q262040000 | ARANDELA GROW. A6 A.304 | WASHER GROW. A6 A.304 | 2 | 2 | 2 | 2 | | | | |
| | Q162040000 | TUERCA EXAGONAL M6 | HEXAGONAL NUT M6 | 2 | 2 | 2 | 2 | | | | |
| | Q152004000 | TORNILLO APLASTADO M5x13 A304 | FLAT HEADED BOLT M5x13 A304 | 4 | 4 | 4 | 4 | | | | |
| | Q232040000 | ARANDELA A6 | WASHER A6 | 4 | 4 | 4 | 4 | | | | |

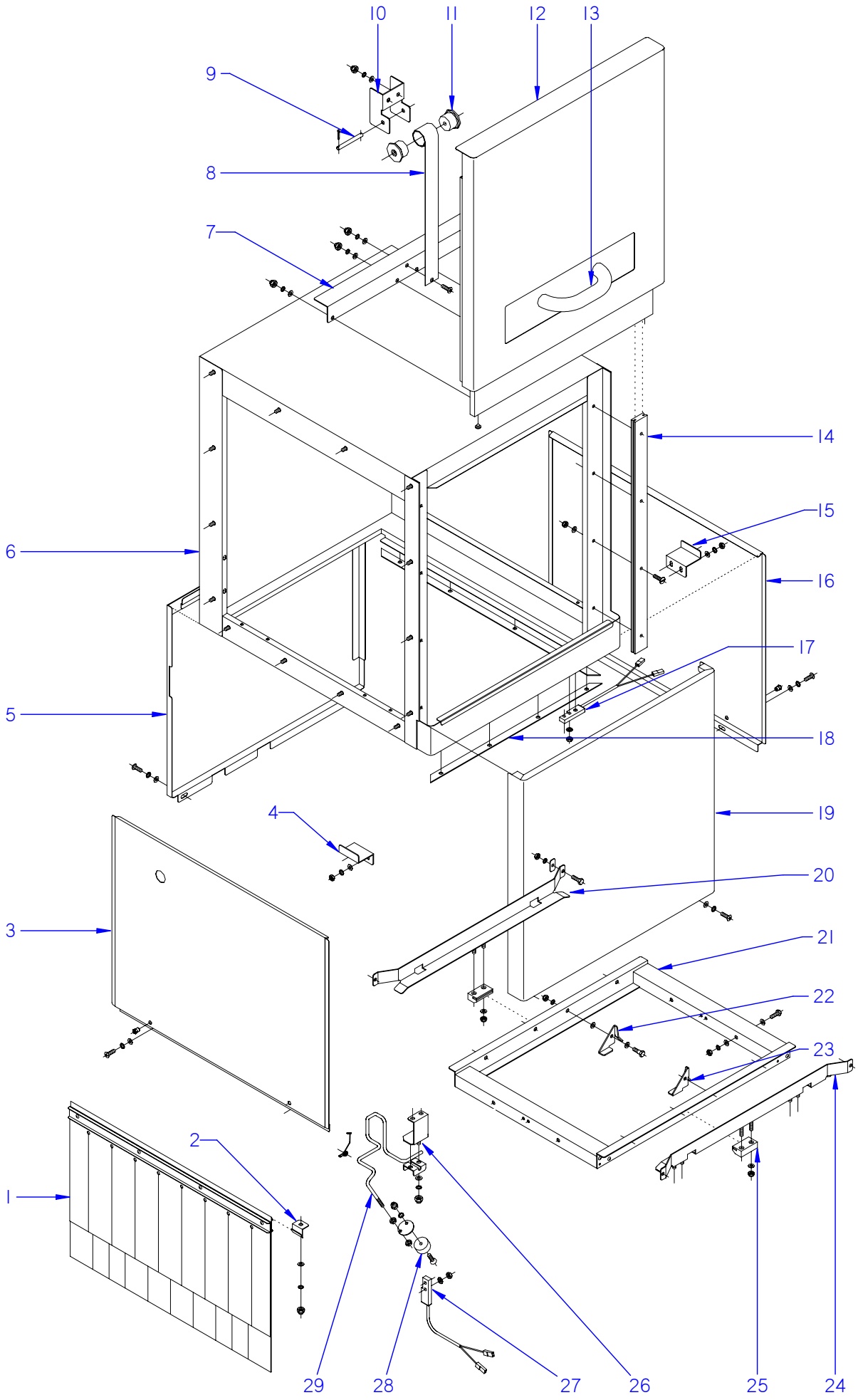


ITEM MARCADO EN COLOR = REPUESTO RECOMENDADO
COLOURED ITEM = RECOMMENDED SPARE PART

| N plano | Firma | Fecha | Aparato | | Lamina | |
|---|---|---|---|---|---|---|
| C-2141 | | 2008-11 | TUNEL DE PRELAVADO<br>LAVAVAJILLAS MODULARES | | 2 | Fagor Industrial S.Coop.<br>Oñate |

| MOD. | LAVAVAJILLAS MODULARES<br>MODULAR DISHWASHERS | ZONA | TUNEL DE PRELAVADO / PREWASH TUNNEL | PLANO | C-2141 |
|---|---|---|---|---|---|

| ITEM | CODIGO | DENOMINACION | TEXTO | FI-370 I<br>ECO-370 I | FI-370 D<br>ECO-370 D | FI-550 I<br>ECO-550 I | FI-550 D<br>ECO-550 D | | | | NOTAS |
|---|---|---|---|---|---|---|---|---|---|---|---|
| 1 | Z276429000 | CORTINA INTERIOR COMPLETA | COMPLETE INTERIOR CURTAIN | 2 | 2 | 2 | 2 | | | | |
| S/Nº | Z276419000 | CORTINA EXTERIOR COMPLETA | COMPLETE EXTERIOR CURTAIN | 1 | 1 | 1 | 1 | | | | |
| 2 | Z270326000 | SUJECION CORTINA | CURTAIN FASTENING | 4 | 4 | 4 | 4 | | | | |
| | Q232040000 | ARANDELA A6 | WASHER A6 | 4 | 4 | 4 | 4 | | | | |
| | Q262030000 | ARANDELA GROW. A5 A.304 | WASHER GROW. A5 A.304 | 4 | 4 | 4 | 4 | | | | |
| | Q212031000 | TUERCA SOMBRERETE M5 | COWL NUT M5 | 4 | 4 | 4 | 4 | | | | |
| 3 | Z312903000 | PANEL LATERAL | SIDE PANEL | 1 | _ | 1 | _ | | | | |
| 4 | Z312917000 | APOYO PANEL DCHO. | RIGHT PANEL SUPPORT | 1 | _ | 1 | _ | | | | |
| 5 | Z332921000 | PANEL POSTE. PRELAVADO IZDO | REAR LEFT PREWASH PANEL | 1 | _ | 1 | _ | | | | |
| 5 | Z332903000 | PANEL POSTE. PRELAVADO DCHO | REAR RIGHT PREWASH PANEL | _ | 1 | _ | 1 | | | | |
| 6 | Z330400000 | CAJA PRELAVADO SOLDADA | WELDED PREWASH BOX | 1 | 1 | 1 | 1 | | | | |
| 7 | Z310528000 | AMARRE RESORTE PRELAVADO | PREWASH SPRING FASTENING | 1 | 1 | 1 | 1 | | | | ELIMINADO 10.02.09 |
| 7 | Z270517000 | AMARRE RESORTE | SPRING FASTENING | 1 | 1 | 1 | 1 | | | | INTRODUCIDO 10.02.09 |
| | Q152004000 | TORNILLO APLASTADO M5x13 A304 | FLAT HEADED BOLT M5x13 A304 | 2 | 2 | 2 | 2 | | | | |
| 8 | Z270513000 | RESORTE FUERZA CONSTANTE | CONSTANT FORCE SPRING | 1 | 1 | 1 | 1 | | | | |
| 9 | Z270514000 | EJE RESORTE | SPRING SHAFT | 1 | 1 | 1 | 1 | | | | |
| | Q352001000 | PASADOR DE ALETAS 2X20 | COTTER PIN 2X20 | 2 | 2 | 2 | 2 | | | | |
| 10 | Z270511000 | SOPORTE RESORTE | SPRING SUPPORT | 1 | 1 | 1 | 1 | | | | |
| | Q232040000 | ARANDELA A6 | WASHER A6 | 2 | 2 | 2 | 2 | | | | |
| | Q212031000 | TUERCA SOMBRERETE M5 | COWL NUT M5 | 2 | 2 | 2 | 2 | | | | |
| 11 | Z270512000 | ENCAJE RESORTE | SPRING SOCKET | 2 | 2 | 2 | 2 | | | | |
| 12 | Z310521000 | PUERTA PREACLARADO MONTAD. | PRERINSE DOOR MOUNTED | 1 | 1 | 1 | 1 | | | | |
| | Z270516000 | TOPE | STOP | 2 | 2 | 2 | 2 | | | | |
| | Z270531000 | SUJECION PUERTA | DOOR FASTENING | 1 | 1 | 1 | 1 | | | | ELIMINADO 10.02.09 |
| S/Nº | Z510556000 | SOPORTE ENGANCHE PUERTA | SUPPORT DOOR LATCH | 1 | 1 | 1 | 1 | | | | INTRODUCIDO 10.02.09 |
| S/Nº | Z510550000 | ENGANCHE PUERTA COMPLETO | FULL DOOR HOOK | 1 | 1 | 1 | 1 | | | | ELIMINADO 25.10.13 |
| S/Nº | 12096567 | ENGANCHE PUERTA COMPLETO | FULL DOOR HOOK | 1 | 1 | 1 | 1 | | | | INTRODUCIDO 25.10.13 |
| 13 | Z400540000 | ASA PUERTA COMPLETA | COMPLETE DOOR HANDLE | 1 | 1 | 1 | 1 | | | | |
| 14 | Z270336000 | GUIA PUERTA | DOOR GUIDE | 2 | 2 | 2 | 2 | | | | |
| | Q152045000 | TORNILLO AMARRE M6X25 | FASTENING BOLT M6X25 | 8 | 8 | 8 | 8 | | | | |
| | Q222012000 | TUERCA AUTOBLOCANTE M6 | SELF-LOCKING NUT M6 | 8 | 8 | 8 | 8 | | | | |

| MOD. | LAVAVAJILLAS MODULARES<br>MODULAR DISHWASHERS | ZONA | TUNEL DE PRELAVADO / PREWASH TUNNEL | PLANO | C-2141 |
|---|---|---|---|---|---|

| ITEM | CODIGO | DENOMINACION | TEXTO | FI-370 I<br>ECO-370 I | FI-370 D<br>ECO-370 D | FI-550 I<br>ECO-550 I | FI-550 D<br>ECO-550 D | | | | NOTAS |
|---|---|---|---|---|---|---|---|---|---|---|---|
| 15 | Z312917000 | APOYO PANEL DCHO. | RIGHT PANEL SUPPORT | _ | 1 | _ | 1 | | | | |
| | Q262040000 | ARANDELA GROW. A6 A.304 | WASHER GROW. A6 A.304 | _ | 4 | _ | 4 | | | | |
| | Q162040000 | TUERCA EXAGONAL M6 | HEXAGONAL NUT M6 | _ | 4 | _ | 4 | | | | |
| 16 | Z312903000 | PANEL LATERAL | SIDE PANEL | _ | 1 | _ | 1 | | | | |
| 17 | Z100522000 | INTERRUPTOR MAGNETICO AC | MAGNETIC SWITCH AC | 1 | 1 | 1 | 1 | | | | |
| | Q242020000 | ARANDELA ABANICO A4 A.304 | FAN WASHER A4 A.304 | 1 | 1 | 1 | 1 | | | | |
| | Q162020000 | TUERCA EXAGONAL M4 | HEXAGONAL NUT M4 | 1 | 1 | 1 | 1 | | | | |
| 18 | Z330431000 | PERFIL LONGITUDINAL PRELAVAD. | LONGITUDINAL PREWASH PROF | 2 | 2 | 2 | 2 | | | | |
| S/Nº | Z330432000 | PERFIL TRANSVERSAL PRELAVAD. | TRANSVERSAL PREWASH PROF | 2 | 2 | 2 | 2 | | | | |
| 19 | Z332901000 | PANEL FRONTAL PRELAVADO | FRONT PREWASH PANEL | 1 | 1 | 1 | 1 | | | | |
| 20 | Z315029000 | GUIA PRELAVADO POSTERIOR | REAR PREWASH GUIDE | 1 | 1 | 1 | 1 | | | | |
| | Z310341000 | ARANDELA RECTANGULAR | RECTANGULAR WASHER | 2 | 2 | 2 | 2 | | | | |
| | Q162040000 | TUERCA EXAGONAL M6 | HEXAGONAL NUT M6 | 2 | 2 | 2 | 2 | | | | |
| | Q232040000 | ARANDELA A6 | WASHER A6 | 2 | 2 | 2 | 2 | | | | |
| | Q012042000 | TORNILLO EXAGONAL M6X15 | HEXAGONAL BOLT M6x15 | 2 | 2 | 2 | 2 | | | | |
| 21 | Z335011000 | SOPORTE UÑA PRELAVADO COM. | COM. PREWASH CLAW SUPPOR | 2 | 2 | 2 | 2 | | | | |
| 22 | Z275077000 | UÑA ARRASTRE IZQUIERDA LASER | LASER LEFT DRAG CLAW | 4 | 4 | 4 | 4 | | | | |
| 23 | Z275078000 | UÑA ARRASTRE DERECHA LASER | LASER RIGHT DRAG CLAW | 4 | 4 | 4 | 4 | | | | |
| | Q232050000 | ARANDELA A8 | WASHER A8 | 16 | 16 | 16 | 16 | | | | |
| | Q152046000 | TORNILLO EXAGON. CON CUELLO | HEXAGONAL BOLT. WITH NECK | 8 | 8 | 8 | 8 | | | | |
| 24 | Z335025000 | GUIA PRELAVADO ANTERI. IZDO | FRONT LEFT PREWASH GUIDE | 1 | _ | 1 | _ | | | | |
| 24 | Z335005000 | GUIA PRELAVADO ANTERI. DCHO | FRONT RIGHT PREWASH GUIDE | _ | 1 | _ | 1 | | | | |
| 25 | Z275075000 | DESLIZAMIENTO GUIAS | GUIDE SLIDE | 4 | 4 | 4 | 4 | | | | |
| | Q232040000 | ARANDELA A6 | WASHER A6 | 8 | 8 | 8 | 8 | | | | |
| | Q222012000 | TUERCA AUTOBLOCANTE M6 | SELF-LOCKING NUT M6 | 8 | 8 | 8 | 8 | | | | |
| 26 | Z271211000 | U SOPORTE PULSADOR | BUTTON U-SUPPORT | 1 | 1 | 1 | 1 | | | | |
| | Q232040000 | ARANDELA A6 | WASHER A6 | 2 | 2 | 2 | 2 | | | | |
| | Q262030000 | ARANDELA GROW. A5 A.304 | WASHER GROW. A5 A.304 | 2 | 2 | 2 | 2 | | | | |
| | Q212031000 | TUERCA SOMBRERETE M5 | COWL NUT M5 | 2 | 2 | 2 | 2 | | | | |
| | | | | | | | | | | | |
| | | | | | | | | | | | |

| MOD. | LAVAVAJILLAS MODULARES<br>MODULAR DISHWASHERS | ZONA | TUNEL DE PRELAVADO / PREWASH TUNNEL | PLANO | C-2141 |
|---|---|---|---|---|---|

| ITEM | CODIGO | DENOMINACION | TEXTO | FI-370 I<br>ECO-370 I | FI-370 D<br>ECO-370 D | FI-550 I<br>ECO-550 I | FI-550 D<br>ECO-550 D | | | | NOTAS |
|---|---|---|---|---|---|---|---|---|---|---|---|
| 27 | Z100522000 | INTERRUPTOR MAGNETICO AC | MAGNETIC SWITCH AC | 1 | 1 | 1 | 1 | | | | |
| | Q242020000 | ARANDELA ABANICO A4 A.304 | FAN WASHER A4 A.304 | 2 | 2 | 2 | 2 | | | | |
| | Q162020000 | TUERCA EXAGONAL M4 | HEXAGONAL NUT M4 | 2 | 2 | 2 | 2 | | | | |
| 28 | Z271207000 | IMAN | MAGNET | 1 | 1 | 1 | 1 | | | | |
| | Z271206000 | SOPORTE IMAN | MAGNET BRACKET | 1 | 1 | 1 | 1 | | | | |
| | Q072033000 | TORN.G.S. M5X20 A304 | BOLT G.S. M5X20 A304 | 1 | 1 | 1 | 1 | | | | |
| | Q212031000 | TUERCA SOMBRERETE M5 | COWL NUT M5 | 1 | 1 | 1 | 1 | | | | |
| | Q232030000 | ARANDELA A5 | WASHER A5 | 1 | 1 | 1 | 1 | | | | |
| | Q162040000 | TUERCA EXAGONAL M6 | HEXAGONAL NUT M6 | 2 | 2 | 2 | 2 | | | | |
| 29 | Z311253000 | PULSADOR T.E. IZQUIERDO | T.E. BUTTON LEFT | 1 | _ | 1 | _ | | | | |
| 29 | Z311256000 | PULSADOR T.E. DERECHO | T.E. BUTTON RIGHT | _ | 1 | _ | 1 | | | | |
| S/Nº | Z271201000 | SOPORTE PULSADOR | BUTTON SUPPORT | 1 | 1 | 1 | 1 | | | | |
| | Q232040000 | ARANDELA A6 | WASHER A6 | 2 | 2 | 2 | 2 | | | | |
| | Q262030000 | ARANDELA GROW. A5 A.304 | WASHER GROW. A5 A.304 | 2 | 2 | 2 | 2 | | | | |
| | Q212031000 | TUERCA SOMBRERETE M5 | COWL NUT M5 | 2 | 2 | 2 | 2 | | | | |
| | Z271203000 | MUELLE TORSION IZDO 27601 | LEFT TORSION SPRING 27601 | 1 | _ | 1 | _ | | | | |
| | Z271204000 | MUELLE TORSION DCHO 27561 | RIGHT TORS.ION SPRING 27561 | _ | 1 | _ | 1 | | | | |
| | | | | | | | | | | | |
| | | | | | | | | | | | |
| | | | | | | | | | | | |
| | | | | | | | | | | | |
| | | | | | | | | | | | |
| | | | | | | | | | | | |
| | | | | | | | | | | | |
| | | | | | | | | | | | |
| | | | | | | | | | | | |
| | | | | | | | | | | | |
| | | | | | | | | | | | |
| | | | | | | | | | | | |
| | | | | | | | | | | | |
| | | | | | | | | | | | |

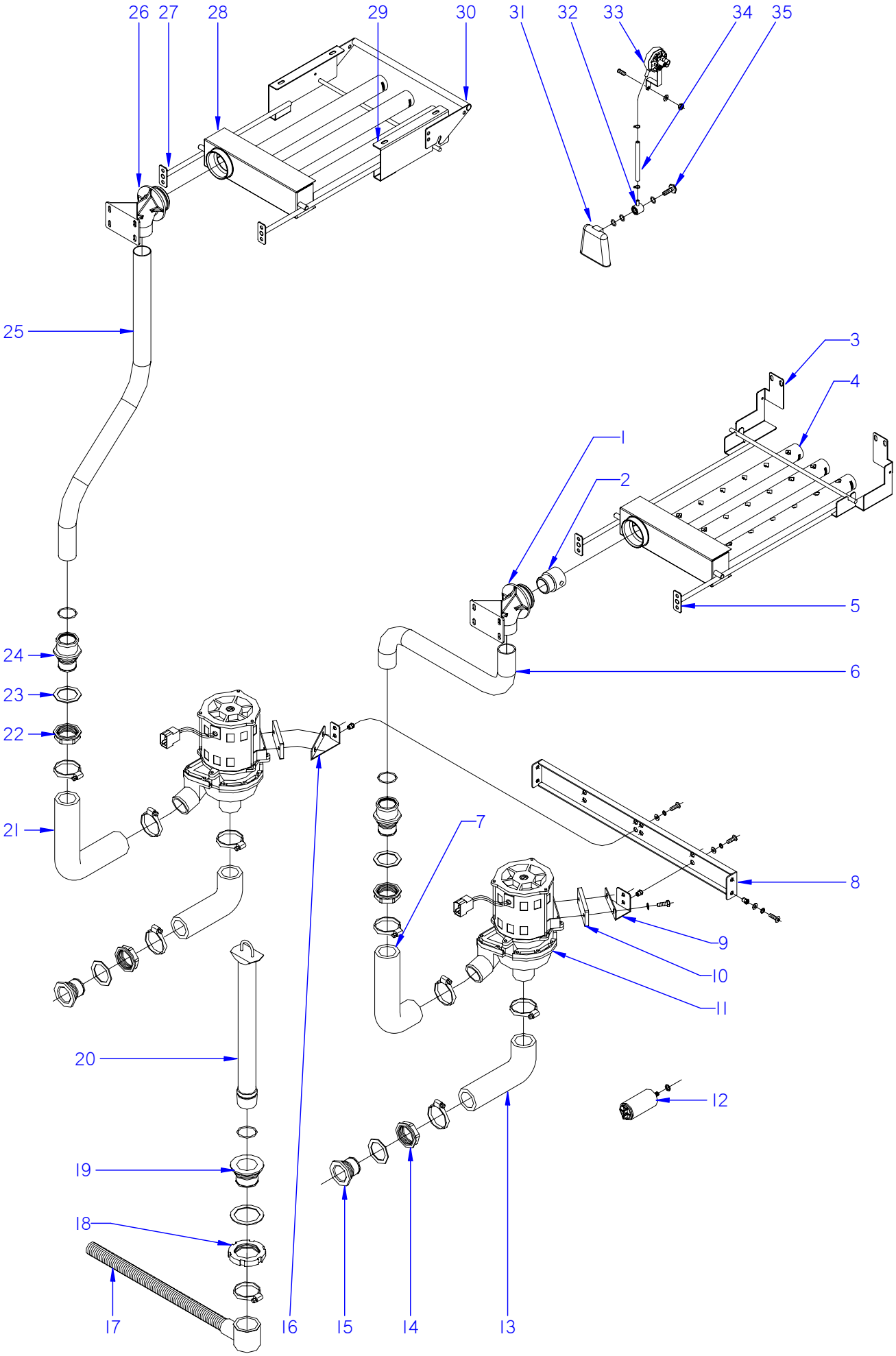


ITEM MARCADO EN COLOR = REPUESTO RECOMENDADO
COLOURED ITEM = RECOMMENDED SPARE PART

| N plano | Firma | Fecha | Aparato | | Lamina | |
|---|---|---|---|---|---|---|
| C-2142 | | 2008-11 | PARTE FUNCIONAL PRELAVADO<br>LAVAVAJILLAS MODULARES | | 3 | Fagor Industrial S.Coop.<br>Oñate |

| MOD. | LAVAVAJILLAS MODULARES<br>MODULAR DISHWASHERS | ZONA | PARTE FUNCIONAL DE PRELAVADO<br>FUNCTIONAL PART OF PREWASH | PLANO | C-2142 |
|---|---|---|---|---|---|

| ITEM | CODIGO | DENOMINACION | TEXTO | FI-370 I<br>ECO-370 I | FI-370 D<br>ECO-370 D | FI-550 I<br>ECO-550 I | FI-550 D<br>ECO-550 D | | | | NOTAS |
|---|---|---|---|---|---|---|---|---|---|---|---|
| 1 | Z330789000 | PASAMUROS SUPER. PRELAVADO | PREWASH UPPER BUSHING. | 1 | 1 | 1 | 1 | | | | |
| | Q307065000 | JUNTA TORICA Ø43,01X37,77X2.62 | O-RING Ø43.01X37.77X2.62 | 1 | 1 | 1 | 1 | | | | |
| | Q307057000 | JUNTA TORICA Ø47.22x54.28x3.53 | O-RING Ø47.22x54.28x3.53 | 1 | 1 | 1 | 1 | | | | |
| | Q262040000 | ARANDELA GROW. A6 A.304 | WASHER GROW. A6 A.304 | 4 | 4 | 4 | 4 | | | | |
| | Q232040000 | ARANDELA A6 | WASHER A6 | 4 | 4 | 4 | 4 | | | | |
| | Q162040000 | TUERCA EXAGONAL M6 | HEXAGONAL NUT M6 | 4 | 4 | 4 | 4 | | | | |
| 2 | Z330787000 | REDUCCION PRELAVADO | PREWASH REDUCTION | 1 | 1 | 1 | 1 | | | | |
| 3 | Z370711000 | SOPORTE INFERIOR DERECHO | RIGHT LOWER SUPPORT | 1 | 1 | 1 | 1 | | | | |
| | Q262040000 | ARANDELA GROW. A6 A.304 | WASHER GROW. A6 A.304 | 4 | 4 | 4 | 4 | | | | |
| | Q232040000 | ARANDELA A6 | WASHER A6 | 4 | 4 | 4 | 4 | | | | |
| | Q162040000 | TUERCA EXAGONAL M6 | HEXAGONAL NUT M6 | 4 | 4 | 4 | 4 | | | | |
| 4 | Z370735000 | DISTRIBUIDOR PRELAVADO DCHO. | RIGHT PREWASH DISTRIBUTOR | 1 | 1 | 1 | 1 | | | | |
| | Z310721000 | TAPON CIERRE | CLOSING PLUG | 3 | 3 | 3 | 3 | | | | |
| | Q307068000 | JUNTA TORICA Ø33X27X3 | O-RING Ø33X27X3 | 3 | 3 | 3 | 3 | | | | |
| 5 | Z370715000 | SOPORTE INFERIOR IZQUIERDO | LEFT LOWER SUPPORT | 1 | 1 | 1 | 1 | | | | |
| | Q262040000 | ARANDELA GROW. A6 A.304 | WASHER GROW. A6 A.304 | 4 | 4 | 4 | 4 | | | | |
| | Q232040000 | ARANDELA A6 | WASHER A6 | 4 | 4 | 4 | 4 | | | | |
| | Q162040000 | TUERCA EXAGONAL M6 | HEXAGONAL NUT M6 | 4 | 4 | 4 | 4 | | | | |
| 6 | Z330763000 | CONDUC. INF. IZDA. PRELAVADO | PREWASH LEFT LOW. PIPE | 1 | _ | 1 | _ | | | | |
| 6 | Z330774000 | CONDUC. INF. DCHA. PRELAVADO | PREWASH RIGHT LOW. PIPE | _ | 1 | _ | 1 | | | | |
| 7 | Z710905000 | CONDUCTO IMPULSION ANTER. | FRONT IMPULSE PIPE | 1 | 1 | 1 | 1 | | | | |
| | Q881307000 | ABRAZADERA 40-60 | CLAMP 40-60 | 2 | 2 | 2 | 2 | | | | |
| 8 | Z331001000 | SUJEC. MOTOBOMBA PRELAVADO | PREWASH MOTORPUMP FAST. | 1 | 1 | 1 | 1 | | | | |
| | Q221342000 | REMACHE EXAGONAL M5 | HEXAGONAL RIVET M5 | 8 | 8 | 8 | 8 | | | | |
| 9 | Z331002000 | SOP. MOTOBOMBA ANTER. PREL. | SUPPORT PREWASH FRONT MO | 1 | 1 | 1 | 1 | | | | |
| 10 | Z201003000 | BASE BOMBA LAVADO 1003016 | WASH PUMP BASE 1003016 | 2 | 2 | 2 | 2 | | | | |
| | Q232040000 | ARANDELA A6 | WASHER A6 | 4 | 4 | 4 | 4 | | | | |
| | Q012042000 | TORNILLO EXAGONAL M6X15 | HEXAGONAL BOLT M6x15 | 4 | 4 | 4 | 4 | | | | |
| 11 | Z201011000 | BOMBA DE LAVADO | WASH PUMP | 2 | 2 | 2 | 2 | | | | |
| 11 | Z203511000 | BOMBA DE LAVADO 60 Hz. | WASH PUMP 60 Hz. | 2 | 2 | 2 | 2 | | | | |
| | | | | | | | | | | | |

| MOD. | LAVAVAJILLAS MODULARES<br>MODULAR DISHWASHERS | ZONA | PARTE FUNCIONAL DE PRELAVADO<br>FUNCTIONAL PART OF PREWASH | PLANO | C-2142 |
|---|---|---|---|---|---|

| ITEM | CODIGO | DENOMINACION | TEXTO | FI-370 I<br>ECO-370 I | FI-370 D<br>ECO-370 D | FI-550 I<br>ECO-550 I | FI-550 D<br>ECO-550 D | | | | NOTAS |
|---|---|---|---|---|---|---|---|---|---|---|---|
| 12 | V321300000 | CONDENSADOR 10 M.F. | CONDENSER 10 M.F. | 2 | 2 | 2 | 2 | | | | |
| | Q162050000 | TUERCA EXAGONAL M8x1 INOX. | HEXAGONAL NUT M8x1 INOX. | 2 | 2 | 2 | 2 | | | | |
| 13 | Z710904000 | CONDUCTO ASPIRACION | EXTRACTOR PIPE | 2 | 2 | 2 | 2 | | | | |
| | Q881307000 | ABRAZADERA 40-60 | CLAMP 40-60 | 2 | 2 | 2 | 2 | | | | |
| 14 | Z710708000 | TUERCA PASAMUROS | WALL BUSHING NUT | 2 | 2 | 2 | 2 | | | | |
| 15 | Z710903000 | PASAMUROS ASPIRACION | EXTRACTOR BUSHING | 2 | 2 | 2 | 2 | | | | |
| | Q307058000 | ARANDELA Ø60x44X2 | WASHER Ø60x44X2 | 2 | 2 | 2 | 2 | | | | |
| 16 | Z331003000 | SOP. MOTOBOMBA POSTE. PRELA. | SUPPORT PREWASH REAR MOT | 1 | 1 | 1 | 1 | | | | |
| | Q302022000 | ARANDELA 16X6X1.2 A.304 | WASHER 16X6X1.2 A.304 | 8 | 8 | 8 | 8 | | | | |
| | Q262030000 | ARANDELA GROW. A5 A.304 | WASHER GROW. A5 A.304 | 8 | 8 | 8 | 8 | | | | |
| | Q012032000 | TORNILLO EXAGONAL M5X15 | HEXAGONAL BOLT M5x15 | 8 | 8 | 8 | 8 | | | | |
| 17 | Z200910000 | MANGUERA DESAGUE | DRAINAGE HOSE | 1 | 1 | 1 | 1 | | | | |
| | Q881307000 | ABRAZADERA 40-60 | CLAMP 40-60 | 1 | 1 | 1 | 1 | | | | |
| 18 | Q220001000 | TUERCA RANURADA M56X2,5 HOS | GROOVED NUT M56X2.5 HOS | 1 | 1 | 1 | 1 | | | | |
| 19 | Z710902000 | PASAMUROS DESAGUE | DRAINAGE BUSHING | 1 | 1 | 1 | 1 | | | | |
| | Q307059000 | JUNTA Ø72x56x2 | JOINT Ø72x56x2 | 1 | 1 | 1 | 1 | | | | |
| 20 | Z330921000 | ALIVIADERO | OVERFLOW | 1 | 1 | 1 | 1 | | | | |
| | Q307051000 | JUNTA TORICA Ø36.17X41.41X2.6 | O-RING Ø36.17X41.41X2.6 | 1 | 1 | 1 | 1 | | | | |
| 21 | Z710906000 | CONDUCTO IMPULSION POSTER. | REAR IMPULSE PIPE | 1 | 1 | 1 | 1 | | | | |
| | Q881307000 | ABRAZADERA 40-60 | CLAMP 40-60 | 2 | 2 | 2 | 2 | | | | |
| 22 | Z710708000 | TUERCA PASAMUROS | WALL BUSHING NUT | 2 | 2 | 2 | 2 | | | | |
| | Q307065000 | JUNTA TORICA Ø43,01X37,77X2.62 | O-RING Ø43.01X37.77X2.62 | 2 | 2 | 2 | 2 | | | | |
| 23 | Q307058000 | ARANDELA Ø60x44X2 | WASHER Ø60x44X2 | 2 | 2 | 2 | 2 | | | | |
| 24 | Z330751000 | PASAMUROS IMPULSION PRELAV. | PREWASH IMPULSE BUSHING | 2 | 2 | 2 | 2 | | | | ELIMINADO 31.03.09 |
| 24 | Z330790000 | PASAMUROS IMPULSION PRELAV. | PREWASH IMPULSE BUSHING | 2 | 2 | 2 | 2 | | | | INTRODUCIDO 31.03.09 |
| 25 | Z330765000 | CONDUC. SUP. IZDA PRELAVADO | PREWASH LEFT UPPER PIPE | 1 | _ | 1 | _ | | | | |
| 25 | Z330776000 | CONDUC. SUP. DCHA PRELAVADO | PREWASH RIGHT UPPER PIPE | _ | 1 | _ | 1 | | | | |
| | | | | | | | | | | | |
| | | | | | | | | | | | |
| | | | | | | | | | | | |
| | | | | | | | | | | | |

| MOD. | LAVAVAJILLAS MODULARES<br>MODULAR DISHWASHERS | ZONA | PARTE FUNCIONAL DE PRELAVADO<br>FUNCTIONAL PART OF PREWASH | PLANO | C-2142 |
|---|---|---|---|---|---|

| ITEM | CODIGO | DENOMINACION | TEXTO | FI-370 I<br>ECO-370 I | FI-370 D<br>ECO-370 D | FI-550 I<br>ECO-550 I | FI-550 D<br>ECO-550 D | | | | NOTAS |
|---|---|---|---|---|---|---|---|---|---|---|---|
| 26 | Z330789000 | PASAMUROS SUPER. PRELAVADO | PREWASH UPPER BUSHING. | 1 | 1 | 1 | 1 | | | | |
| | Q307065000 | JUNTA TORICA Ø43,01X37,77X2.62 | O-RING Ø43.01X37.77X2.62 | 1 | 1 | 1 | 1 | | | | |
| | Q307057000 | JUNTA TORICA Ø47.22x54.28x3.53 | O-RING Ø47.22x54.28x3.53 | 1 | 1 | 1 | 1 | | | | |
| | Q262040000 | ARANDELA GROW. A6 A.304 | WASHER GROW. A6 A.304 | 4 | 4 | 4 | 4 | | | | |
| | Q232040000 | ARANDELA A6 | WASHER A6 | 4 | 4 | 4 | 4 | | | | |
| | Q162040000 | TUERCA EXAGONAL M6 | HEXAGONAL NUT M6 | 4 | 4 | 4 | 4 | | | | |
| 27 | Z370701000 | SOPORTE SUPERIOR DERECHO | RIGHT UPPER SUPPORT | 1 | 1 | 1 | 1 | | | | |
| | Q262040000 | ARANDELA GROW. A6 A.304 | WASHER GROW. A6 A.304 | 4 | 4 | 4 | 4 | | | | |
| | Q232040000 | ARANDELA A6 | WASHER A6 | 4 | 4 | 4 | 4 | | | | |
| | Q162040000 | TUERCA EXAGONAL M6 | HEXAGONAL NUT M6 | 4 | 4 | 4 | 4 | | | | |
| 28 | Z370737000 | DISTRIBUIDOR PRELAVADO IZDO. | LEFT PREWASH DISTRIBUTOR | 1 | 1 | 1 | 1 | | | | |
| | Z310721000 | TAPON CIERRE | CLOSING PLUG | 3 | 3 | 3 | 3 | | | | |
| | Q307068000 | JUNTA TORICA Ø33X27X3 | O-RING Ø33X27X3 | 3 | 3 | 3 | 3 | | | | |
| 29 | Z370705000 | SOPORTE SUPERIOR IZQUIERDO | LEFT UPPER SUPPORT | 1 | 1 | 1 | 1 | | | | |
| | Q262040000 | ARANDELA GROW. A6 A.304 | WASHER GROW. A6 A.304 | 4 | 4 | 4 | 4 | | | | |
| | Q232040000 | ARANDELA A6 | WASHER A6 | 4 | 4 | 4 | 4 | | | | |
| | Q162040000 | TUERCA EXAGONAL M6 | HEXAGONAL NUT M6 | 4 | 4 | 4 | 4 | | | | |
| 30 | Z370725000 | SUJECION DISTRIB. PRELAVADO | PREWASH DISTRIB. FASTENING | 1 | 1 | 1 | 1 | | | | |
| | Q152047000 | TORNILLO CILINDRI. CON CUELLO | CYLINDRICAL SCREW WITH NEC | 2 | 2 | 2 | 2 | | | | |
| | Q262030000 | ARANDELA GROW. A5 A.304 | WASHER GROW. A5 A.304 | 2 | 2 | 2 | 2 | | | | |
| | Q212031000 | TUERCA SOMBRERETE M5 | COWL NUT M5 | 2 | 2 | 2 | 2 | | | | |
| 31 | Z203011000 | CAMARA PRESOSTATO | PRESSURE SWITCH | 1 | 1 | 1 | 1 | | | | |
| 32 | Z203012000 | EMPALME PRESOSTATO | PRESSURE SWITCH CONNEX | 1 | 1 | 1 | 1 | | | | |
| 33 | Z273006000 | PRESOSTATO SIMPLE | SIMPLE PRESSURE SWITCH | 1 | 1 | 1 | 1 | | | | |
| | Z602923000 | SOPORTE PRESOSTATO | PRESSURE SWITCH SUPPORT | 2 | 2 | 2 | 2 | | | | |
| | Q082032000 | TORNILLO ALOMADO BZ-3,5X9,5 | CURVED SCREW BZ-3.5x9.5 | 2 | 2 | 2 | 2 | | | | |
| | Q232040000 | ARANDELA A6 | WASHER A6 | 2 | 2 | 2 | 2 | | | | |
| | Q162040000 | TUERCA EXAGONAL M6 | HEXAGONAL NUT M6 | 2 | 2 | 2 | 2 | | | | |
| 34 | 3702400000 | TUBO GOMA NEGRO D 8*4 | BLACK RUBBER PIPE Ø 8*4 | 1 | 1 | 1 | 1 | | | | |
| | P102154000 | BRIDA ELASTICA TUBO | ELASTIC PIPE FLANGE | 2 | 2 | 2 | 2 | | | | |
| | | | | | | | | | | | |

| MOD. | LAVAVAJILLAS MODULARES<br>MODULAR DISHWASHERS | ZONA | PARTE FUNCIONAL DE PRELAVADO<br>FUNCTIONAL PART OF PREWASH | PLANO | C-2142 |
|---|---|---|---|---|---|

| ITEM | CODIGO | DENOMINACION | TEXTO | FI-370 I<br>ECO-370 I | FI-370 D<br>ECO-370 D | FI-550 I<br>ECO-550 I | FI-550 D<br>ECO-550 D | | | | NOTAS |
|---|---|---|---|---|---|---|---|---|---|---|---|
| 35 | Z203013000 | TORNILLO PRESOSTATO | PRESSURE SWITCH BOLT | 1 | 1 | 1 | 1 | | | | |
| | Q307003000 | JUNTA TORICA 16.01X10.77X2.62 | O-RING 16.01X10.77X2.62 | 3 | 3 | 3 | 3 | | | | |

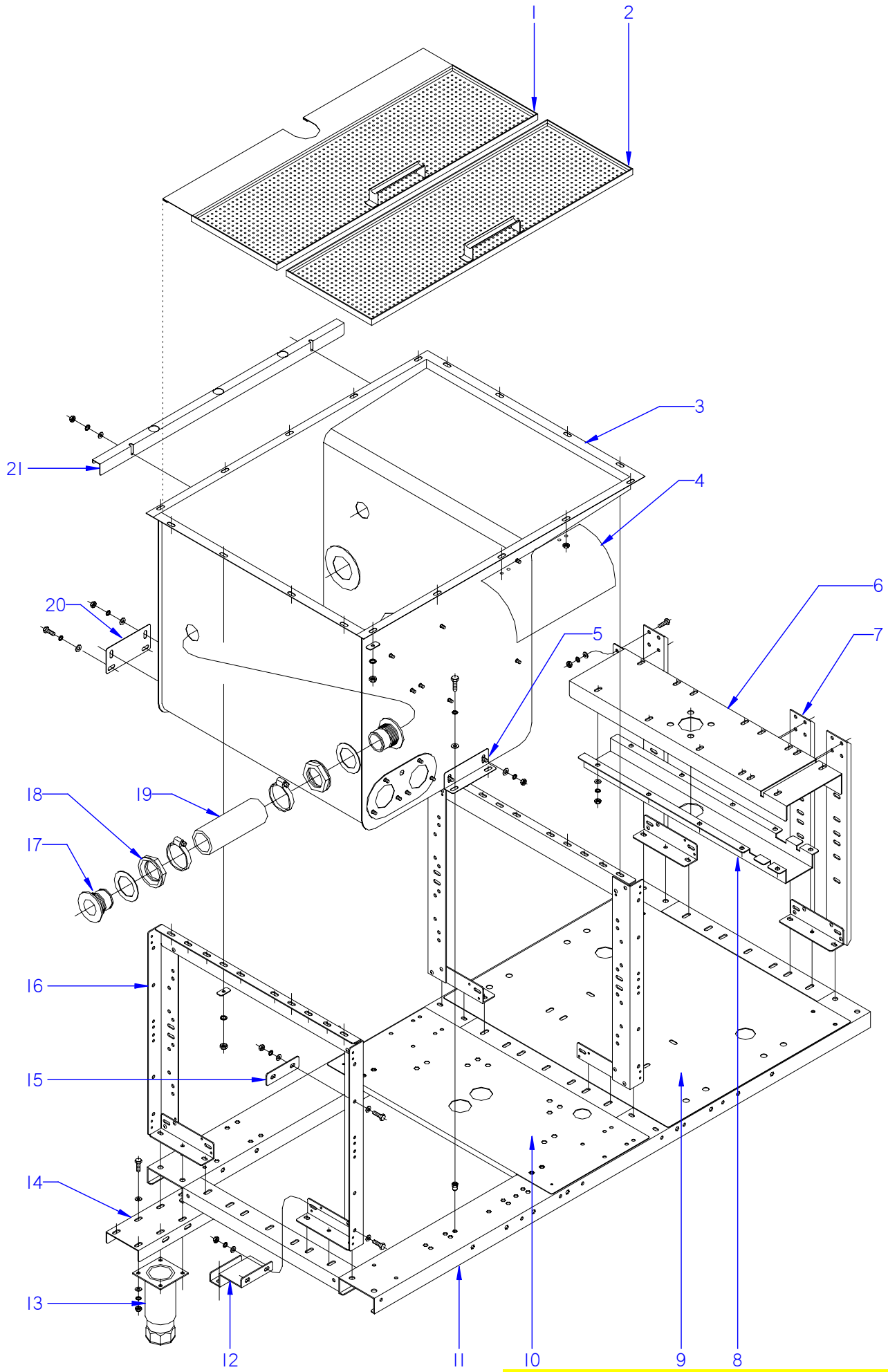


ITEM MARCADO EN COLOR = REPUESTO RECOMENDADO
COLOURED ITEM = RECOMMENDED SPARE PART

| N plano | Firma | Fecha | Aparato | Lamina | |
|---|---|---|---|---|---|
| C-2143 | | 2008-11 | ARMAZON Y CUBA DE LAVADO<br>LAVAVAJILLAS MODULARES | 4 | Fagor Industrial S.Coop. FAGOR<br>Onate |

| MOD. | LAVAVAJILLAS MODULARES<br>MODULAR DISHWASHERS | ZONA | ARMAZON Y CUBA DE LAVADO<br>PREWASH TUB AND FRAME | PLANO | C-2143 |
|---|---|---|---|---|---|

| ITEM | CODIGO | DENOMINACION | TEXTO | FI-280 I<br>ECO-280 I | FI-280 D<br>ECO-280 D | FI-370 I<br>ECO-370 I | FI-370 D<br>ECO-370 D | FI-460 I<br>ECO-460 I | FI-460 D<br>ECO-460 D | FI-550 I<br>ECO-550 I | FI-550 D<br>ECO-550 D | NOTAS |
|---|---|---|---|---|---|---|---|---|---|---|---|---|
| 1 | Z310811000 | BANDEJA LAVADO POSTERIOR | REAR WASH TRAY | 1 | 1 | 1 | 1 | 2 | 2 | 2 | 2 | |
| 2 | Z310813000 | BANDEJA LAVADO ANTERIOR | FRONT WASH TRAY | 1 | 1 | 1 | 1 | 2 | 2 | 2 | 2 | |
| 3 | Z310320000 | CUBA LAVADO SOLDADA | WELDED WASH TUB | 1 | 1 | 1 | 1 | 2 | 2 | 2 | 2 | |
| | Z310341000 | ARANDELA RECTANGULAR | RECTANGULAR WASHER | 18 | 18 | 18 | 18 | 36 | 36 | 36 | 36 | |
| | Q262040000 | ARANDELA GROW. A6 A.304 | WASHER GROW. A6 A.304 | 18 | 18 | 18 | 18 | 36 | 36 | 36 | 36 | |
| | Q162040000 | TUERCA EXAGONAL M6 | HEXAGONAL NUT M6 | 18 | 18 | 18 | 18 | 36 | 36 | 36 | 36 | |
| 4 | Z313041000 | CUBIERTA COMPONENTES | COMPONENT COVER | 2 | 2 | 2 | 2 | 4 | 4 | 4 | 4 | |
| 5 | Z270324000 | AMARRE CUBA ANTERIOR | FRONT TUB FASTENING | 1 | 1 | 1 | 1 | 2 | 2 | 2 | 2 | |
| | Q302022000 | ARANDELA 16X6X1.2 A.304 | WASHER 16X6X1.2 A.304 | 4 | 4 | 4 | 4 | 8 | 8 | 8 | 8 | |
| | Q262040000 | ARANDELA GROW. A6 A.304 | WASHER GROW. A6 A.304 | 4 | 4 | 4 | 4 | 8 | 8 | 8 | 8 | |
| | Q162040000 | TUERCA EXAGONAL M6 | HEXAGONAL NUT M6 | 2 | 2 | 2 | 2 | 4 | 4 | 4 | 4 | |
| | Q012042000 | TORNILLO EXAGONAL M6X15 | HEXAGONAL BOLT M6x15 | 2 | 2 | 2 | 2 | 4 | 4 | 4 | 4 | |
| 6 | Z311824000 | REFUERZO SOPORTE IZQUIERDO | LEFT SUPPORT REINFORCEMEN | 1 | _ | 1 | _ | 1 | _ | 1 | _ | |
| 6 | Z311825000 | REFUERZO SOPORTE DERECHO | RIGHT SUPPORT REINFORCEME | _ | 1 | _ | 1 | _ | 1 | _ | 1 | |
| | Q302022000 | ARANDELA 16X6X1.2 A.304 | WASHER 16X6X1.2 A.304 | 15 | 15 | 15 | 15 | 15 | 15 | 15 | 15 | |
| | Q262040000 | ARANDELA GROW. A6 A.304 | WASHER GROW. A6 A.304 | 15 | 15 | 15 | 15 | 15 | 15 | 15 | 15 | |
| | Q162040000 | TUERCA EXAGONAL M6 | HEXAGONAL NUT M6 | 15 | 15 | 15 | 15 | 15 | 15 | 15 | 15 | |
| 7 | Z310122000 | POSTE PREACLARADO | REAR PRERINSE | 2 | 2 | 2 | 2 | 2 | 2 | 2 | 2 | |
| | Q411304000 | REMACHE AVIBULB Ø4,8 | AVIBULB RIVET Ø4.8 | 8 | 8 | 8 | 8 | 8 | 8 | 8 | 8 | |
| | Q012043000 | TORNILLO EXAGONAL M6X20 | HEXAGONAL BOLT M6x20 | 7 | 7 | 7 | 7 | 7 | 7 | 7 | 7 | |
| | Q262040000 | ARANDELA GROW. A6 A.304 | WASHER GROW. A6 A.304 | 7 | 7 | 7 | 7 | 7 | 7 | 7 | 7 | |
| | Q162040000 | TUERCA EXAGONAL M6 | HEXAGONAL NUT M6 | 7 | 7 | 7 | 7 | 7 | 7 | 7 | 7 | |
| 8 | Z311832000 | REFUERZO | REINFORCEMENT | 1 | 1 | 1 | 1 | 1 | 1 | 1 | 1 | |
| 9 | Z310112000 | PANEL TRANSVERSAL PREACLAR. | PRERINSE TRANSVERSAL PANE | 1 | 1 | 1 | 1 | 1 | 1 | 1 | 1 | |
| 10 | Z310111000 | PANEL TRANSVERSAL LAVADO | TRANSVERSAL WASH PANEL | 1 | 1 | 1 | 1 | 1 | 1 | 1 | 1 | |
| | Q411304000 | REMACHE AVIBULB Ø4,8 | AVIBULB RIVET Ø4.8 | 2 | 2 | 2 | 2 | 2 | 2 | 2 | 2 | |
| 11 | Z310101000 | ARMAZON SOLDADO | WELDED FRAME | 1 | 1 | 1 | 1 | 1 | 1 | 1 | 1 | |
| S/Nº | Z350101000 | ARMAZON LAVADO SOLDADO | WELDED WASH FRAME | _ | _ | _ | _ | 1 | 1 | 1 | 1 | |
| 12 | Z330104000 | REFUERZO ARMAZON | FRAME REINFORCEMENT | _ | _ | _ | _ | 2 | 2 | 2 | 2 | |
| 13 | X260151000 | PATA REGULABLE | ADJUSTABLE LEG | 4 | 4 | 4 | 4 | 6 | 6 | 6 | 6 | |
| 14 | Z330103000 | SOPORTE PATA | LEG SUPPORT | _ | _ | _ | _ | 2 | 2 | 2 | 2 | |

| MOD. | LAVAVAJILLAS MODULARES<br>MODULAR DISHWASHERS | ZONA | ARMAZON Y CUBA DE LAVADO<br>PREWASH TUB AND FRAME | PLANO | C-2143 |
|---|---|---|---|---|---|

| ITEM | CODIGO | DENOMINACION | TEXTO | FI-280 I<br>ECO-280 I | FI-280 D<br>ECO-280 D | FI-370 I<br>ECO-370 I | FI-370 D<br>ECO-370 D | FI-460 I<br>ECO-460 I | FI-460 D<br>ECO-460 D | FI-550 I<br>ECO-550 I | FI-550 D<br>ECO-550 D | NOTAS |
|---|---|---|---|---|---|---|---|---|---|---|---|---|
| 15 | Z330105000 | EMPALME ARMAZON | FRAME CONNECTION | _ | _ | _ | _ | 2 | 2 | 2 | 2 | |
| 16 | Z310104000 | SOPORTE CUBA LAVADO MONTA. | WASH TUB SUPPORT MOUNTED | 2 | 2 | 2 | 2 | 4 | 4 | 4 | 4 | |
| | Q012043000 | TORNILLO EXAGONAL M6X20 | HEXAGONAL BOLT M6x20 | 11 | 11 | 11 | 11 | 22 | 22 | 22 | 22 | |
| | Q302022000 | ARANDELA 16X6X1.2 A.304 | WASHER 16X6X1.2 A.304 | 22 | 22 | 22 | 22 | 44 | 44 | 44 | 44 | |
| | Q262040000 | ARANDELA GROW. A6 A.304 | WASHER GROW. A6 A.304 | 11 | 11 | 11 | 11 | 22 | 22 | 22 | 22 | |
| | Q162040000 | TUERCA EXAGONAL M6 | HEXAGONAL NUT M6 | 11 | 11 | 11 | 11 | 22 | 22 | 22 | 22 | |
| 17 | Z330901000 | PASAMUROS COMUNICACION | COMMUNICATION BUSHING | _ | _ | _ | _ | 2 | 2 | 2 | 2 | |
| | Q307009000 | ARANDELA 70X48X1.5 | WASHER 70X48X1.5 | _ | _ | _ | _ | 2 | 2 | 2 | 2 | |
| 18 | Z702101000 | TUERCA R.11/2 DELRIN | R.11/2 DELRIN NUT | _ | _ | _ | _ | 2 | 2 | 2 | 2 | |
| 19 | Z330906000 | MANGUERA COMUNICACION | COMMUNICATION HOSE | _ | _ | _ | _ | 1 | 1 | 1 | 1 | |
| | Q881324000 | ABRAZADERA 50-70L | CLAMP 50-70L | _ | _ | _ | _ | 2 | 2 | 2 | 2 | |
| 20 | Z270325000 | AMARRE CUBA POSTERIOR | REAR TUB FASTENING | 1 | 1 | 1 | 1 | 2 | 2 | 2 | 2 | |
| | Q302022000 | ARANDELA 16X6X1.2 A.304 | WASHER 16X6X1.2 A.304 | 4 | 4 | 4 | 4 | 8 | 8 | 8 | 8 | |
| | Q262040000 | ARANDELA GROW. A6 A.304 | WASHER GROW. A6 A.304 | 8 | 8 | 8 | 8 | 16 | 16 | 16 | 16 | |
| | Q162040000 | TUERCA EXAGONAL M6 | HEXAGONAL NUT M6 | 8 | 8 | 8 | 8 | 16 | 16 | 16 | 16 | |
| | Q012042000 | TORNILLO EXAGONAL M6X15 | HEXAGONAL BOLT M6x15 | 4 | 4 | 4 | 4 | 8 | 8 | 8 | 8 | |
| 21 | Z312907000 | SOPORTE PANEL LAVADO | WASH PANEL SUPPORT | 1 | 1 | 1 | 1 | 2 | 2 | 2 | 2 | |

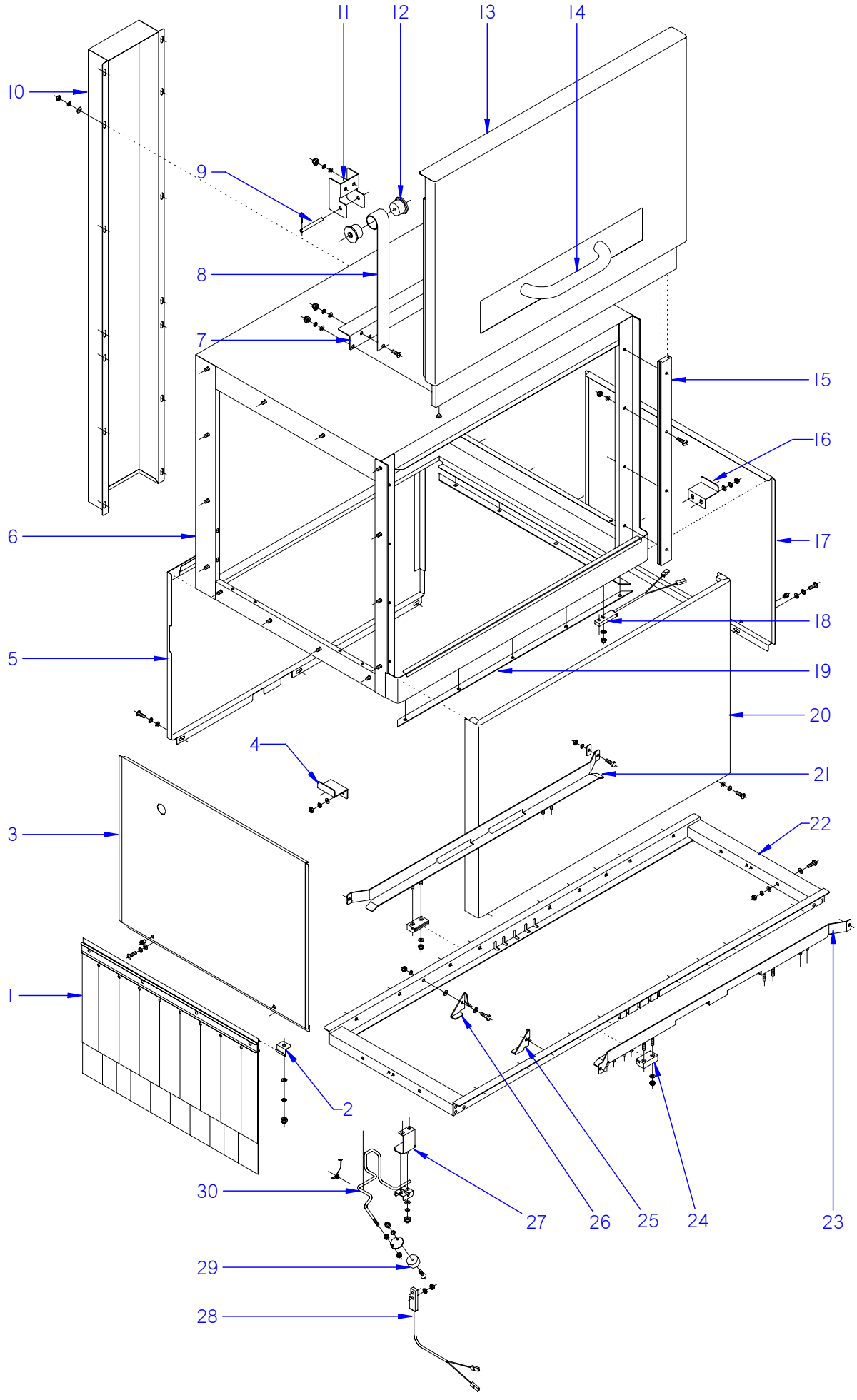


ITEM MARCADO EN COLOR = REPUESTO RECOMENDADO
COLOURED ITEM = RECOMMENDED SPARE PART

| N plano | Firma | Fecha | Aparato | | Lamina | |
|---|---|---|---|---|---|---|
| C-2144 | | 2008-11 | TUNEL DE LAVADO<br>LAVAVAJILLAS MODULARES | | 5 | Fagor Industrial S.Coop. FAGOR<br>Onate |

| MOD. | LAVAVAJILLAS MODULARES<br>MODULAR DISHWASHERS | ZONA | TUNEL DE LAVADO / WASH TUNNEL | PLANO | C-2144 |
|---|---|---|---|---|---|

| ITEM | CODIGO | DENOMINACION | TEXTO | FI-280 I<br>ECO-280 I | FI-280 D<br>ECO-280 D | FI-370 I<br>ECO-370 I | FI-370 D<br>ECO-370 D | FI-460 I<br>ECO-460 I | FI-460 D<br>ECO-460 D | FI-550 I<br>ECO-550 I | FI-550 D<br>ECO-550 D | NOTAS |
|---|---|---|---|---|---|---|---|---|---|---|---|---|
| 1 | Z276429000 | CORTINA INTERIOR COMPLETA | COMPLETE INTERIOR CURTAIN | 2 | 2 | 1 | 1 | 3 | 3 | 2 | 2 | |
| 2 | Z270326000 | SUJECION CORTINA | CURTAIN FASTENING | 2 | 2 | 2 | 2 | 6 | 4 | 6 | 4 | |
| | Q232040000 | ARANDELA A6 | WASHER A6 | 2 | 2 | 2 | 2 | 6 | 4 | 6 | 4 | |
| | Q212031000 | TUERCA SOMBRERETE M5 | COWL NUT M5 | 2 | 2 | 2 | 2 | 6 | 4 | 6 | 4 | |
| 3 | Z312903000 | PANEL LATERAL | SIDE PANEL | 1 | _ | _ | _ | 1 | _ | _ | _ | |
| 4 | Z312917000 | APOYO PANEL DCHO. | RIGHT PANEL SUPPORT | 2 | _ | _ | _ | 2 | _ | _ | _ | |
| | Q262040000 | ARANDELA GROW. A6 A.304 | WASHER GROW. A6 A.304 | 4 | _ | _ | _ | 4 | _ | _ | _ | |
| | Q162040000 | TUERCA EXAGONAL M6 | HEXAGONAL NUT M6 | 4 | _ | _ | _ | 4 | _ | _ | _ | |
| 5 | Z312953000 | PANEL POSTERIOR LAVADO IZDO | REAR LEFT WASH PANEL | 1 | _ | _ | _ | _ | _ | _ | _ | |
| 5 | Z312951000 | PANEL POSTERIOR LAVADO DCH | REAR RIGHT WASH PANEL | _ | 1 | _ | _ | _ | _ | _ | _ | |
| 5 | Z312905000 | PANEL POSTERIOR LAVADO | REAR WASH PANEL | _ | _ | 1 | 1 | 1 | 1 | 1 | 1 | ELIMINA. 19.12.13 |
| 5 | 12098651 | PANEL POSTERIOR LAVADO COMP. | COMPLETE REAR WASH PANEL | _ | _ | 1 | 1 | 1 | 1 | 1 | 1 | INTROD. 19.12.13 |
| S/Nº | Z312964000 | PANEL POSTERIOR LAVADO IZDO | REAR LEFT WASH PANEL | _ | _ | _ | _ | 1 | _ | 1 | _ | |
| S/Nº | Z312965000 | PANEL POSTERIOR LAVADO DCHO | REAR RIGHT WASH PANEL | _ | _ | _ | _ | _ | 1 | _ | 1 | |
| S/Nº | Z312968000 | PANEL POSTERIO. LAVADO FI-55O | REAR WASH PANEL FI-55O | _ | _ | _ | _ | _ | _ | 1 | 1 | |
| 6 | Z310300000 | CAJA LAVADO SOLDADA | WELDED WASH BOX | 1 | 1 | 1 | 1 | 2 | 2 | 2 | 2 | |
| 7 | Z310512000 | AMARRE RESORTE LAVADO | WASH SPRING FASTENING | 1 | 1 | 1 | 1 | 2 | 2 | 2 | 2 | ELIMINA. 10.02.09 |
| 7 | Z270517000 | AMARRE RESORTE | SPRING FASTENING | 1 | 1 | 1 | 1 | 2 | 2 | 2 | 2 | INTROD. 10.02.09 |
| | Q152004000 | TORNILLO APLASTADO M5x13 A304 | FLAT HEADED BOLT M5x13 A304 | 1 | 1 | 1 | 1 | 4 | 4 | 4 | 4 | |
| | Q232040000 | ARANDELA A6 | WASHER A6 | 3 | 3 | 3 | 3 | 12 | 12 | 12 | 12 | |
| | Q262030000 | ARANDELA GROW. A5 A.304 | WASHER GROW. A5 A.304 | 3 | 3 | 3 | 3 | 12 | 12 | 12 | 12 | |
| | Q212031000 | TUERCA SOMBRERETE M5 | COWL NUT M5 | 3 | 3 | 3 | 3 | 12 | 12 | 12 | 12 | |
| 8 | Z310511000 | RESORTE FUERZA CONSTANTE | CONSTANT FORCE SPRING | 2 | 2 | 2 | 2 | 4 | 4 | 4 | 4 | |
| 9 | Z270514000 | EJE RESORTE | SPRING SHAFT | 2 | 2 | 2 | 2 | 4 | 4 | 4 | 4 | |
| | Q352001000 | PASADOR DE ALETAS 2X20 | COTTER PIN 2X20 | 4 | 4 | 4 | 4 | 8 | 8 | 8 | 8 | |
| 10 | Z313049000 | CUBIERTA POST.CUADRO ELECT. | ELECT. PANEL REAR COVER | 1 | 1 | 1 | 1 | 1 | 1 | 1 | 1 | |
| | Q262040000 | ARANDELA GROW. A6 A.304 | WASHER GROW. A6 A.304 | 38 | 38 | 38 | 38 | 38 | 38 | 38 | 38 | |
| | Q162040000 | TUERCA EXAGONAL M6 | HEXAGONAL NUT M6 | 24 | 24 | 24 | 24 | 24 | 24 | 24 | 24 | |
| | Q212040000 | TUERCA SOMBRERETE M6 | COWL NUT M6 | 14 | 14 | 14 | 14 | 14 | 14 | 14 | 14 | |
| | Q152017000 | TORNILLO AMARRE M6X13 A304 | FASTENING BOLT M6X13 A304 | 4 | 4 | 4 | 4 | 4 | 4 | 4 | 4 | |
| | Q221343000 | REMACHE EXAGONAL M6 | HEXAGONAL RIVET M6 | 4 | 4 | 4 | 4 | 4 | 4 | 4 | 4 | |

| MOD. | LAVAVAJILLAS MODULARES<br>MODULAR DISHWASHERS | ZONA | TUNEL DE LAVADO / WASH TUNNEL | PLANO | C-2144 |
|---|---|---|---|---|---|

| ITEM | CODIGO | DENOMINACION | TEXTO | FI-280 I<br>ECO-280 I | FI-280 D<br>ECO-280 D | FI-370 I<br>ECO-370 I | FI-370 D<br>ECO-370 D | FI-460 I<br>ECO-460 I | FI-460 D<br>ECO-460 D | FI-550 I<br>ECO-550 I | FI-550 D<br>ECO-550 D | NOTAS |
|---|---|---|---|---|---|---|---|---|---|---|---|---|
| 11 | Z270511000 | SOPORTE RESORTE | SPRING SUPPORT | 2 | 2 | 2 | 2 | 4 | 4 | 4 | 4 | |
| | Q232040000 | ARANDELA A6 | WASHER A6 | 4 | 4 | 4 | 4 | 8 | 8 | 8 | 8 | |
| | Q262030000 | ARANDELA GROW. A5 A.304 | WASHER GROW. A5 A.304 | 4 | 4 | 4 | 4 | 8 | 8 | 8 | 8 | |
| | Q212031000 | TUERCA SOMBRERETE M5 | COWL NUT M5 | 4 | 4 | 4 | 4 | 8 | 8 | 8 | 8 | |
| 12 | Z270512000 | ENCAJE RESORTE | SPRING SOCKET | 4 | 4 | 4 | 4 | 8 | 8 | 8 | 8 | |
| 13 | Z310501000 | PUERTA LAVADO MONTADA | WASH DOOR MOUNTED | 1 | 1 | 1 | 1 | 2 | 2 | 2 | 2 | |
| | Z270516000 | TOPE | STOP | 2 | 2 | 2 | 2 | 4 | 4 | 4 | 4 | |
| | Z270531000 | SUJECION PUERTA | DOOR FASTENING | 1 | 1 | 1 | 1 | 2 | 2 | 2 | 2 | ELIMIN. 10.02.09 |
| S/Nº | Z510556000 | SOPORTE ENGANCHE PUERTA | SUPPORT DOOR LATCH | 1 | 1 | 1 | 1 | 1 | 1 | 1 | 1 | INTROD. 10.02.09 |
| S/Nº | Z510550000 | ENGANCHE PUERTA COMPLETO | FULL DOOR HOOK | 1 | 1 | 1 | 1 | 1 | 1 | 1 | 1 | ELIMINAD. 25.10.13 |
| S/Nº | 12096567 | ENGANCHE PUERTA COMPLETO | FULL DOOR HOOK | 1 | 1 | 1 | 1 | 1 | 1 | 1 | 1 | NTRODUC. 25.10.13 |
| S/Nº | Z276122000 | CHECK LIST ARRASTRE FAGOR | CHECK LIST | 1 | 1 | 1 | 1 | 1 | 1 | 1 | 1 | INTROD. 19.07.10 |
| 14 | Z200550000 | ASA PUERTA COMPLETA | COMPLETE DOOR HANDLE | 1 | 1 | 1 | 1 | 2 | 2 | 2 | 2 | |
| 15 | Z270336000 | GUIA PUERTA | DOOR GUIDE | 2 | 2 | 2 | 2 | 4 | 4 | 4 | 4 | |
| | Q152045000 | TORNILLO AMARRE M6X25 | FASTENING BOLT M6X25 | 8 | 8 | 8 | 8 | 16 | 16 | 16 | 16 | |
| | Q232040000 | ARANDELA A6 | WASHER A6 | 8 | 8 | 8 | 8 | 16 | 16 | 16 | 16 | |
| | Q222012000 | TUERCA AUTOBLOCANTE M6 | SELF-LOCKING NUT M6 | 8 | 8 | 8 | 8 | 16 | 16 | 16 | 16 | |
| 16 | Z312917000 | APOYO PANEL DERECHO | RIGHT PANEL SUPPORT | _ | 2 | _ | _ | _ | 2 | _ | _ | |
| 17 | Z312903000 | PANEL LATERAL | SIDE PANEL | _ | 1 | _ | _ | _ | 1 | _ | _ | |
| 18 | Z100522000 | INTERRUPTOR MAGNETICO AC | MAGNETIC SWITCH AC | 1 | 1 | 1 | 1 | 2 | 2 | 2 | 2 | |
| | Q162020000 | TUERCA EXAGONAL M4 | HEXAGONAL NUT M4 | 2 | 2 | 2 | 2 | 4 | 4 | 4 | 4 | |
| 19 | Z310324000 | PERFIL LONGITUDINAL LAVADO | LONGITUDINAL WASH PROFILE | 2 | 2 | 2 | 2 | 4 | 4 | 4 | 4 | |
| S/Nº | Z310325000 | PERFIL TRANSVERSAL LAVADO | TRANSVERSAL WASH PROFILE | 2 | 2 | 2 | 2 | 4 | 4 | 4 | 4 | |
| 20 | Z312901000 | PANEL FRONTAL LAVADO COMPL. | COMPL. FRONT WASH PANEL | 1 | 1 | 1 | 1 | 2 | 2 | 2 | 2 | |
| 21 | Z315017000 | GUIA LAVADO POSTERIOR | REAR WASH GUIDE | 1 | 1 | 1 | 1 | 2 | 2 | 2 | 2 | |
| | Z310341000 | ARANDELA RECTANGULAR | RECTANGULAR WASHER | 6 | 6 | 6 | 6 | 12 | 12 | 12 | 12 | |
| | Q162040000 | TUERCA EXAGONAL M6 | HEXAGONAL NUT M6 | 6 | 6 | 6 | 6 | 12 | 12 | 12 | 12 | |
| | Q232040000 | ARANDELA A6 | WASHER A6 | 6 | 6 | 6 | 6 | 12 | 12 | 12 | 12 | |
| | Q012042000 | TORNILLO EXAGONAL M6X15 | HEXAGONAL BOLT M6x15 | 6 | 6 | 6 | 6 | 12 | 12 | 12 | 12 | |
| 22 | Z315021000 | SOPORTE UÑA LAVADO | WASH CLAW SUPPORT | 1 | 1 | 1 | 1 | 1 | 1 | 1 | 1 | |
| S/Nº | Z355001000 | SOPORTE UÑA LAVADO | WASH CLAW SUPPORT | _ | _ | _ | _ | 1 | 1 | 1 | 1 | |

| MOD. | LAVAVAJILLAS MODULARES<br>MODULAR DISHWASHERS | ZONA | TUNEL DE LAVADO / WASH TUNNEL | PLANO | C-2144 |
|---|---|---|---|---|---|

| ITEM | CODIGO | DENOMINACION | TEXTO | FI-280 I<br>ECO-280 I | FI-280 D<br>ECO-280 D | FI-370 I<br>ECO-370 I | FI-370 D<br>ECO-370 D | FI-460 I<br>ECO-460 I | FI-460 D<br>ECO-460 D | FI-550 I<br>ECO-550 I | FI-550 D<br>ECO-550 D | NOTAS |
|---|---|---|---|---|---|---|---|---|---|---|---|---|
| 23 | Z315037000 | GUIA DE LAVADO ANTERIOR IZDO. | FRONT LEFT WASH GUIDE | 1 | _ | 1 | _ | 2 | _ | 2 | _ | |
| 23 | Z315015000 | GUIA DE LAVADO ANTERIOR DCH. | FRONT RIGHT WASH GUIDE | _ | 1 | _ | 1 | _ | 2 | _ | 2 | |
| 24 | Z275075000 | DESLIZAMIENTO GUIAS | GUIDE SLIDE | 6 | 6 | 6 | 6 | 12 | 12 | 12 | 12 | |
| | Q232040000 | ARANDELA A6 | WASHER A6 | 12 | 12 | 12 | 12 | 24 | 24 | 24 | 24 | |
| | Q222012000 | TUERCA AUTOBLOCANTE M6 | SELF-LOCKING NUT M6 | 12 | 12 | 12 | 12 | 24 | 24 | 24 | 24 | |
| 25 | Z275078000 | UÑA ARRASTRE DERECHA LASER | LASER RIGHT DRAG CLAW | 10 | 16 | 10 | 16 | 16 | 16 | 16 | 16 | |
| 26 | Z275077000 | UÑA ARRASTRE IZQUIERDA LASER | LASER LEFT DRAG CLAW | 10 | 16 | 10 | 16 | 16 | 16 | 16 | 16 | |
| | Q232050000 | ARANDELA A8 | WASHER A8 | 40 | 40 | 40 | 40 | 64 | 64 | 64 | 64 | |
| | Q152046000 | TORNILLO EXAGON. CON CUELLO | HEXAGONAL BOLT. WITH NECK | 20 | 20 | 20 | 20 | 32 | 32 | 32 | 32 | |
| 27 | Z271211000 | U SOPORTE PULSADOR | BUTTON U-SUPPORT | 1 | 1 | 1 | 1 | 1 | 1 | _ | _ | |
| | Q232040000 | ARANDELA A6 | WASHER A6 | 2 | 2 | 2 | 2 | 2 | 2 | _ | _ | |
| | Q262030000 | ARANDELA GROW. A5 A.304 | WASHER GROW. A5 A.304 | 2 | 2 | 2 | 2 | 2 | 2 | _ | _ | |
| | Q212031000 | TUERCA SOMBRERETE M5 | COWL NUT M5 | 2 | 2 | 2 | 2 | 2 | 2 | _ | _ | |
| 28 | Z100522000 | INTERRUPTOR MAGNETICO AC | MAGNETIC SWITCH AC | 1 | 1 | 1 | 1 | 1 | 1 | _ | _ | |
| | Q242020000 | ARANDELA ABANICO A4 A.304 | FAN WASHER A4 A.304 | 2 | 2 | 2 | 2 | 2 | 2 | _ | _ | |
| | Q162020000 | TUERCA EXAGONAL M4 | HEXAGONAL NUT M4 | 2 | 2 | 2 | 2 | 2 | 2 | _ | _ | |
| 29 | Z271207000 | IMAN | MAGNET | 1 | 1 | 1 | 1 | 1 | 1 | _ | _ | |
| | Z271206000 | SOPORTE IMAN | MAGNET BRACKET | 1 | 1 | 1 | 1 | 1 | 1 | _ | _ | |
| | Q072033000 | TORN.G.S. M5X20 A304 | BOLT G.S. M5X20 A304 | 1 | 1 | 1 | 1 | 1 | 1 | _ | _ | |
| | Q212031000 | TUERCA SOMBRERETE M5 | COWL NUT M5 | 1 | 1 | 1 | 1 | 1 | 1 | _ | _ | |
| | Q232030000 | ARANDELA A5 | WASHER A5 | 1 | 1 | 1 | 1 | 1 | 1 | _ | _ | |
| | Q162040000 | TUERCA EXAGONAL M6 | HEXAGONAL NUT M6 | 2 | 2 | 2 | 2 | 2 | 2 | _ | _ | |
| 30 | Z311253000 | PULSADOR T.E. IZQUIERDO | T.E. BUTTON LEFT | 1 | _ | _ | _ | 1 | _ | _ | _ | |
| 30 | Z311256000 | PULSADOR T.E. DERECHO | T.E. BUTTON RIGHT | _ | 1 | _ | _ | _ | 1 | _ | _ | |
| S/Nº | Z271201000 | SOPORTE PULSADOR | BUTTON SUPPORT | 1 | 1 | 1 | 1 | 1 | 1 | _ | _ | |
| | Q232040000 | ARANDELA A6 | WASHER A6 | 2 | 2 | 2 | 2 | 2 | 2 | _ | _ | |
| | Q262030000 | ARANDELA GROW. A5 A.304 | WASHER GROW. A5 A.304 | 2 | 2 | 2 | 2 | 2 | 2 | _ | _ | |
| | Q212031000 | TUERCA SOMBRERETE M5 | COWL NUT M5 | 2 | 2 | 2 | 2 | 2 | 2 | _ | _ | |
| | Z271203000 | MUELLE TORSION IZDO 27601 | LEFT TORSION SPRING 27601 | 1 | 1 | 1 | 1 | 1 | 1 | _ | _ | |
| | | | | | | | | | | | | |
| | | | | | | | | | | | | |

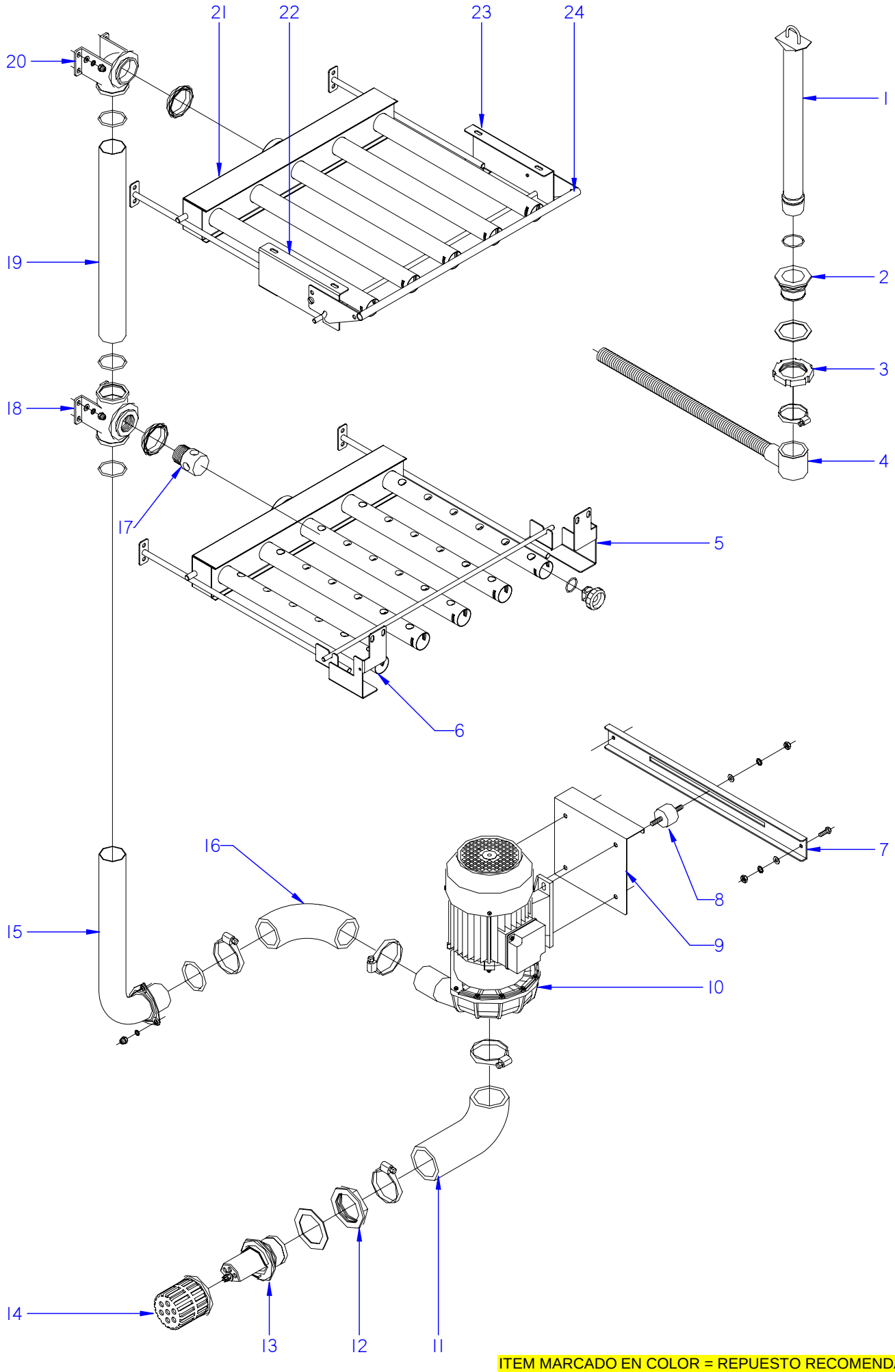


ITEM MARCADO EN COLOR = REPUESTO RECOMENDADO
COLOURED ITEM = RECOMMENDED SPARE PART

| N plano | Firma | Fecha | Aparato | PARTE FUNCIONAL LAVADO | Lamina | |
|---|---|---|---|---|---|---|
| C-2145 | | 2008-11 | LAVAVAJILLAS MODULARES | | 6 | Fagor Industrial S.Coop. FAGOR Oñate |

| MOD. | LAVAVAJILLAS MODULARES<br>MODULAR DISHWASHERS | ZONA | PARTE FUNCIONAL DE LAVADO<br>FUNCTIONAL PART OF WASH | PLANO | C-2145 |
|---|---|---|---|---|---|

| ITEM | CODIGO | DENOMINACION | TEXTO | FI-280<br>ECO-280 | FI-370<br>ECO-370 | FI-460<br>ECO-460 | FI-550<br>ECO-550 | | | | NOTAS |
|---|---|---|---|---|---|---|---|---|---|---|---|
| 1 | Z330921000 | ALIVIADERO | OVERFLOW | 1 | 1 | 2 | 2 | | | | |
| | Q307051000 | JUNTA TORICA Ø36.17X41.41X2.6 | O-RING Ø36.17X41.41X2.6 | 1 | 1 | 2 | 2 | | | | |
| 2 | Z710902000 | PASAMUROS DESAGUE | DRAINAGE BUSHING | 1 | 1 | 2 | 2 | | | | |
| | Q307059000 | JUNTA Ø72x56x2 | JOINT Ø72x56x2 | 1 | 1 | 2 | 2 | | | | |
| 3 | Q220001000 | TUERCA RANURADA M56X2,5 HOS | GROOVED NUT M56X2.5 HOS | 1 | 1 | 2 | 2 | | | | |
| 4 | Z200910000 | MANGUERA DESAGUE | DRAINAGE HOSE | 1 | 1 | 2 | 2 | | | | |
| | Q881307000 | ABRAZADERA 40-60 | CLAMP 40-60 | 1 | 1 | 2 | 2 | | | | |
| 5 | Z370711000 | SOPORTE INFERIOR DERECHO | RIGHT LOWER SUPPORT | 1 | 1 | 2 | 2 | | | | |
| | Q262040000 | ARANDELA GROW. A6 A.304 | WASHER GROW. A6 A.304 | 2 | 2 | 4 | 4 | | | | |
| | Q232040000 | ARANDELA A6 | WASHER A6 | 2 | 2 | 4 | 4 | | | | |
| | Q162040000 | TUERCA EXAGONAL M6 | HEXAGONAL NUT M6 | 2 | 2 | 4 | 4 | | | | |
| 6 | Z370715000 | SOPORTE INFERIOR IZQUIERDO | LEFT LOWER SUPPORT | 1 | 1 | 2 | 2 | | | | |
| | Q262040000 | ARANDELA GROW. A6 A.304 | WASHER GROW. A6 A.304 | 2 | 2 | 4 | 4 | | | | |
| | Q232040000 | ARANDELA A6 | WASHER A6 | 2 | 2 | 4 | 4 | | | | |
| | Q162040000 | TUERCA EXAGONAL M6 | HEXAGONAL NUT M6 | 2 | 2 | 4 | 4 | | | | |
| 7 | Z311001000 | SOPORTE MOTOBOMBA LAVADO | WASH MOTORPUMP SUPPORT | 2 | 2 | 4 | 4 | | | | |
| | Q012042000 | TORNILLO EXAGONAL M6X15 | HEXAGONAL BOLT M6x15 | 4 | 4 | 8 | 8 | | | | |
| | Q302022000 | ARANDELA 16X6X1.2 A.304 | WASHER 16X6X1.2 A.304 | 8 | 8 | 16 | 16 | | | | |
| | Q262040000 | ARANDELA GROW. A6 A.304 | WASHER GROW. A6 A.304 | 4 | 4 | 8 | 8 | | | | |
| | Q162040000 | TUERCA EXAGONAL M6 | HEXAGONAL NUT M6 | 4 | 4 | 8 | 8 | | | | |
| 8 | Z101002000 | ANTIVIBRANTE 2601029 | ANTIVIBRATION 2601029 | 4 | 4 | 8 | 8 | | | | |
| | Q232050000 | ARANDELA A8 | WASHER A8 | 4 | 4 | 8 | 8 | | | | |
| 9 | Z311002000 | SOPORTE ANTIVIBRANTE | ANTIVIBRATION SUPPORT | 1 | 1 | 2 | 2 | | | | |
| | P504920000 | ARANDELA DEPOSITO | TANK WASHER | 4 | 4 | 8 | 8 | | | | |
| | Q262050000 | ARANDELA GROW. A8 A.304 | WASHER GROW. A8 A.304 | 8 | 8 | 16 | 16 | | | | |
| | Q162050000 | TUERCA EXAGONAL M8X1 | HEXAGONAL NUT M8x1 | 8 | 8 | 16 | 16 | | | | |
| 10 | Z101001000 | MOTOBOMBA 230-400 V. | MOTORPUMP 230-400 V. | 1 | 1 | 2 | 2 | | | | |
| 10 | Z104101000 | MOTOBOMBA 220-380V. 60HZ. | MOTORPUMP 220-380V. 60HZ. | 1 | 1 | 2 | 2 | | | | |
| 11 | Z310904000 | CODO ASPIRACION 1003444 | EXTRACTOR ELBOW 1003444 | 1 | 1 | 2 | 2 | | | | |
| | Q881326000 | ABRAZADERA 70-90 | CLAMP 70-90 | 2 | 2 | 4 | 4 | | | | |
| | | | | | | | | | | | |

| MOD. | LAVAVAJILLAS MODULARES<br>MODULAR DISHWASHERS | ZONA | PARTE FUNCIONAL DE LAVADO<br>FUNCTIONAL PART OF WASH | PLANO | C-2145 |
|---|---|---|---|---|---|

| ITEM | CODIGO | DENOMINACION | TEXTO | FI-280<br>ECO-280 | FI-370<br>ECO-370 | FI-460<br>ECO-460 | FI-550<br>ECO-550 | | | | NOTAS |
|---|---|---|---|---|---|---|---|---|---|---|---|
| 12 | Z310903000 | TUERCA PASAMUROS | WALL BUSHING NUT | 1 | 1 | 2 | 2 | | | | |
| | Z310902000 | ARANDELA 92x66x2 | WASHER 92x66x2 | 1 | 1 | 2 | 2 | | | | |
| 13 | Z330787000 | REDUCCION PRELAVADO | PREWASH REDUCTION | _ | 1 | 1 | 1 | | | | |
| 14 | Z310906000 | FILTRO | FILTER | 1 | 1 | 2 | 2 | | | | |
| 15 | Z310701000 | CONDUCCION INFERIOR LAVADO | LOWER WASH PIPE | 1 | 1 | 2 | 2 | | | | |
| | Q307044000 | JUNTA TORICA 67.18x56.52x5.3 | O-RING 67.18x56.52x5.3 | 1 | 1 | 2 | 2 | | | | |
| | Q262040000 | ARANDELA GROW. A65 A.304 | WASHER GROW. A65 A.304 | 3 | 3 | 6 | 6 | | | | |
| | Q212040000 | TUERCA SOMBRERETE M6 | COWL NUT M6 | 3 | 3 | 6 | 6 | | | | |
| 16 | Z310905000 | CODO IMPULSION | IMPULSE ELBOW | 1 | 1 | 2 | 2 | | | | |
| | Q881324000 | ABRAZADERA 50-70L | CLAMP 50-70L | 2 | 2 | 4 | 4 | | | | |
| 17 | Z310753000 | REDUCCION LAVADO | WASH REDUCTION | 1 | 1 | 2 | 2 | | | | |
| 18 | Z310764000 | PASAMUROS INFERIOR LAVADO | LOWER WASH BUSHING | 1 | 1 | 2 | 2 | | | | |
| | Q307064000 | JUNTA TORICA 57,31x52,07x2,62 | O-RING 57.31x52.07x2.62 | 3 | 3 | 6 | 6 | | | | |
| | Q262040000 | ARANDELA GROW. A6 A.304 | WASHER GROW. A6 A.304 | 4 | 4 | 8 | 8 | | | | |
| | Q232040000 | ARANDELA A6 | WASHER A6 | 4 | 4 | 8 | 8 | | | | |
| | Q162040000 | TUERCA EXAGONAL M6 | HEXAGONAL NUT M6 | 4 | 4 | 8 | 8 | | | | |
| 19 | Z310708000 | CONDUCCION SUPERIOR LAVADO | UPPER WASH PIPE | 1 | 1 | 2 | 2 | | | | |
| 20 | Z310765000 | PASAMUROS SUPERIOR LAVADO | UPPER WASH BUSHING | 1 | 1 | 2 | 2 | | | | |
| | Q307057000 | JUNTA TOR.47.22x54.28x3.53 | O-RING 47.22x54.28x3.53 | 2 | 2 | 4 | 4 | | | | |
| | Q262040000 | ARANDELA GROW. A6 A.304 | WASHER GROW. A6 A.304 | 4 | 4 | 8 | 8 | | | | |
| | Q232040000 | ARANDELA A6 | WASHER A6 | 4 | 4 | 8 | 8 | | | | |
| | Q162040000 | TUERCA EXAGONAL M6 | HEXAGONAL NUT M6 | 4 | 4 | 8 | 8 | | | | |
| 21 | Z370731000 | DISTRIBUIDOR LAVADO COMPLET. | COMPLETE WASH DISTRIBUTOR | 2 | 2 | 4 | 4 | | | | |
| | Z310721000 | TAPON CIERRE | CLOSING PLUG | 10 | 10 | 20 | 20 | | | | |
| | Q307068000 | JUNTA TORICA Ø33X27X3 | O-RING Ø33X27X3 | 10 | 10 | 20 | 20 | | | | |
| 22 | Z370705000 | SOPORTE SUPERIOR IZQUIERDO | LEFT UPPER SUPPORT | 1 | 1 | 2 | 2 | | | | |
| | Q262040000 | ARANDELA GROW. A6 A.304 | WASHER GROW. A6 A.304 | 2 | 2 | 4 | 4 | | | | |
| | Q232040000 | ARANDELA A6 | WASHER A6 | 2 | 2 | 4 | 4 | | | | |
| | Q162040000 | TUERCA EXAGONAL M6 | HEXAGONAL NUT M6 | 2 | 2 | 4 | 4 | | | | |
| | | | | | | | | | | | |
| | | | | | | | | | | | |

| MOD. | LAVAVAJILLAS MODULARES<br>MODULAR DISHWASHERS | ZONA | PARTE FUNCIONAL DE LAVADO<br>FUNCTIONAL PART OF WASH | PLANO | C-2145 |
|---|---|---|---|---|---|

| ITEM | CODIGO | DENOMINACION | TEXTO | FI-280<br>ECO-280 | FI-370<br>ECO-370 | FI-460<br>ECO-460 | FI-550<br>ECO-550 | | | | NOTAS |
|---|---|---|---|---|---|---|---|---|---|---|---|
| 23 | Z370701000 | SOPORTE SUPERIOR DERECHO | RIGHT UPPER SUPPORT | 1 | 1 | 2 | 2 | | | | |
| | Q262040000 | ARANDELA GROW. A6 A.304 | WASHER GROW. A6 A.304 | 2 | 2 | 4 | 4 | | | | |
| | Q232040000 | ARANDELA A6 | WASHER A6 | 2 | 2 | 4 | 4 | | | | |
| | Q162040000 | TUERCA EXAGONAL M6 | HEXAGONAL NUT M6 | 2 | 2 | 4 | 4 | | | | |
| 24 | Z370721000 | SUJECION DISTRIBUIDOR COMPL. | COMPL. DISTRIBUTOR FASTENIN | 1 | 1 | 2 | 2 | | | | |
| | Q152047000 | TORNILLO CILINDRI. CON CUELLO | CYLINDRICAL SCREW WITH NEC | 2 | 2 | 4 | 4 | | | | |
| | Q262030000 | ARANDELA GROW. A5 A.304 | WASHER GROW. A5 A.304 | 2 | 2 | 4 | 4 | | | | |
| | Q212031000 | TUERCA SOMBRERETE M5 | COWL NUT M5 | 2 | 2 | 4 | 4 | | | | |

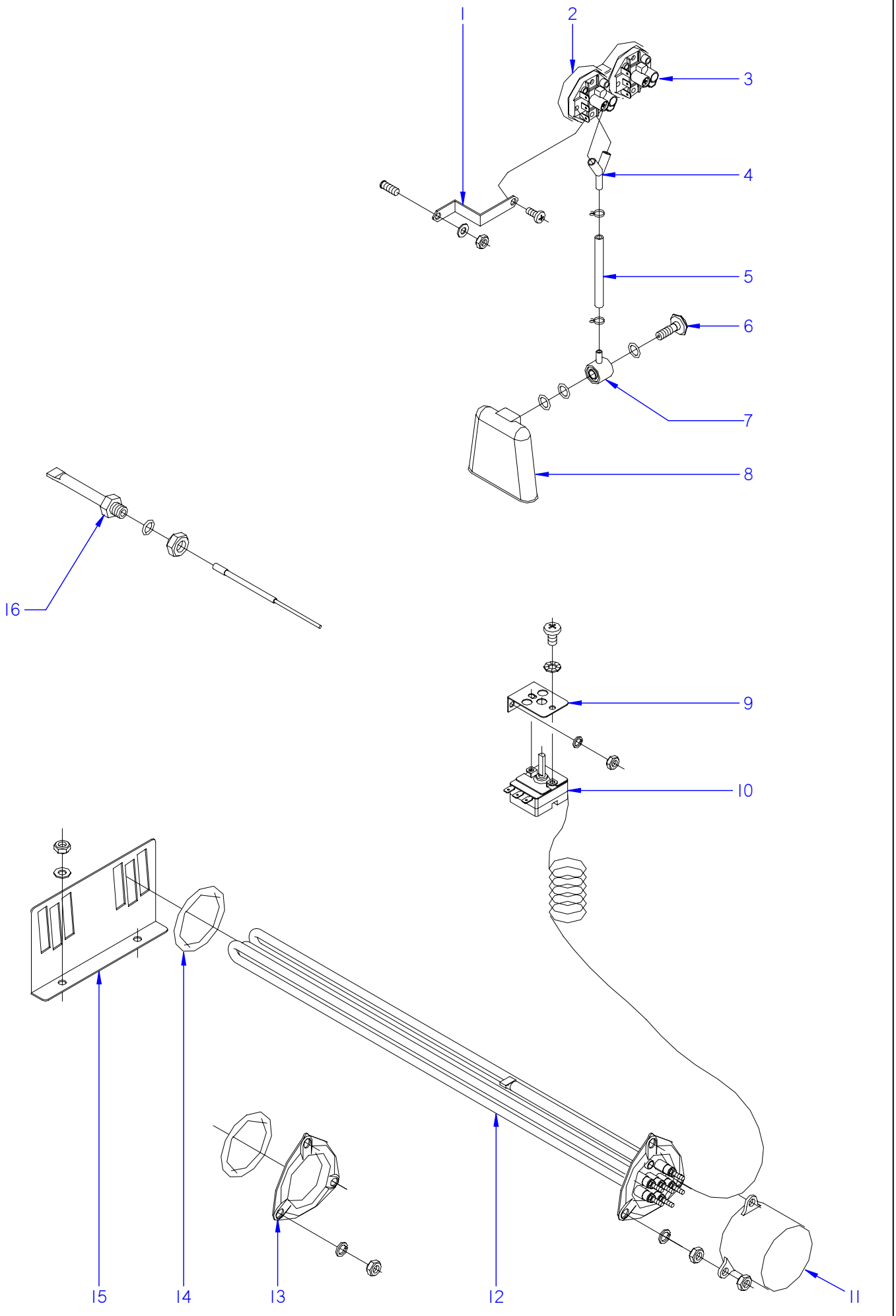


ITEM MARCADO EN COLOR = REPUESTO RECOMENDADO
COLOURED ITEM = RECOMMENDED SPARE PART

| N plano | Firma | Fecha | Aparato | Lamina | |
|---|---|---|---|---|---|
| C-2146 | | 2008-11 | NIVELES Y CALENTAMIENTO DE LAVADO<br>LAVAVAJILLAS MODULARES | 7 | Fagor Industrial S.Coop.<br>Oñate |

| MOD. | LAVAVAJILLAS MODULARES<br>MODULAR DISHWASHERS | ZONA | NIVELES Y CALENTAMIENTO DE LAVADO<br>WASH LEVELS AND HEATING | PLANO | C-2146 |
|---|---|---|---|---|---|

| ITEM | CODIGO | DENOMINACION | TEXTO | FI-280<br>ECO-280 | FI-370<br>ECO-370 | FI-460<br>ECO-460 | FI-550<br>ECO-550 | | | | NOTAS |
|---|---|---|---|---|---|---|---|---|---|---|---|
| 1 | Z602923000 | SOPORTE PRESOSTATO | PRESSURE SWITCH SUPPORT | 1 | 1 | 1 | 2 | | | | |
| | Q082032000 | TORNILLO ALOMADO BZ-3,5X9,5 | CURVED SCREW BZ-3.5x9.5 | 1 | 1 | 1 | 2 | | | | |
| | Q232040000 | ARANDELA A6 | WASHER A6 | 1 | 1 | 1 | 2 | | | | |
| | Q162040000 | TUERCA EXAGONAL M6 | HEXAGONAL NUT M6 | 1 | 1 | 1 | 2 | | | | |
| 2 | Z403021000 | PRESOSTATO SIMPLE | SIMPLE PRESSURE SWITCH | 1 | 1 | 1 | 2 | | | | ELIMINADO 12.05.09 |
| 3 | Z273006000 | PRESOSTATO SIMPLE | SIMPLE PRESSURE SWITCH | 1 | 1 | 2 | 1 | | | | |
| | Q162040000 | TUERCA EXAGONAL M6 | HEXAGONAL NUT M6 | 1 | 1 | 1 | 1 | | | | |
| 4 | Z103077000 | RACORD EN Y | Y-CONNECTION | 1 | 1 | 1 | 2 | | | | ELIMINADO 12.05.09 |
| 5 | 3702400000 | TUBO GOMA NEGRO D 8*4 | BLACK RUBBER PIPE Ø 8*4 | 1 | 1 | 2 | 2 | | | | |
| | P102154000 | BRIDA ELASTICA TUBO | ELASTIC PIPE FLANGE | 2 | 2 | 4 | 4 | | | | |
| 6 | Z203013000 | TORNILLO PRESOSTATO | PRESSURE SWITCH BOLT | 1 | 1 | 2 | 2 | | | | |
| | Q307003000 | JUNTA TORICA 16.01X10.77X2.62 | O-RING 16.01X10.77X2.62 | 3 | 3 | 6 | 6 | | | | |
| 7 | Z203012000 | EMPALME PRESOSTATO | PRESSURE SWITCH CONNEX | 1 | 1 | 2 | 2 | | | | |
| 8 | Z203011000 | CAMARA PRESOSTATO | PRESSURE SWITCH | 1 | 1 | 2 | 2 | | | | |
| S/Nº | Z273072000 | REGULACION TERMOSTATO 63ºC | THERMOSTAT CONTROL 63ºC | 1 | 1 | 1 | 2 | | | | ELIMINADO 30.11.2012 |
| S/Nº | 12047241 | REGULACION 63ºC Tc DE 85ºC | CONTROL 63ºC Tc DE 85ºC | 1 | 1 | 1 | 2 | | | | INTRODUCIDO 30.11.2012 |
| 9 | Z850111000 | SOPORTE TERMOSTATO | THERMOSTAT SUPPORT | 1 | 1 | 1 | 1 | | | | |
| | Q152024000 | TORNILLO AVELLANADO M4X8 | COUNTERSUNK BOLT M4x8 | 2 | 2 | 2 | 2 | | | | |
| | Q232040000 | ARANDELA A6 | WASHER A6 | 2 | 2 | 2 | 2 | | | | |
| | Q162040000 | TUERCA EXAGONAL M6 | HEXAGONAL NUT M6 | 2 | 2 | 2 | 2 | | | | |
| 10 | Z203014000 | TERMOSTATO CALDERIN | WASH DRUM THERMOSTAT | 1 | 1 | 1 | 2 | | | | ELIMINADO 30.11.2012 |
| 10 | 12040858 | TERMOSTATO CALDERIN | WASH DRUM THERMOSTAT | 1 | 1 | 1 | 2 | | | | INTRODUCIDO 30.11.2012 |
| 11 | Z101723000 | CAPERUZA RESISTENCIA | RESISTOR HOOD | 2 | 2 | 2 | 3 | | | | |
| | Q163140000 | TUERCA EXAGONAL M6 LATON | HEXAGONAL NUT M6 BRASS | 12 | 12 | 12 | 18 | | | | |
| | Q262040000 | ARANDELA GROW. A6 A.304 | WASHER GROW. A6 A.304 | 6 | 6 | 6 | 9 | | | | |
| 12 | Z101740000 | RESISTENCIA COMPLET.230V. | COMP. RESISTOR 230V. | 2 | 2 | 2 | 3 | | | | |
| 13 | Z310703010 | BRIDA CIEGA | BLIND FLANGE | _ | _ | 2 | 1 | | | | |
| | Q262040000 | ARANDELA GROW. A6 A.304 | WASHER GROW. A6 A.304 | _ | _ | 6 | 3 | | | | |
| | Q162040000 | TUERCA EXAGONAL M6 | HEXAGONAL NUT M6 | _ | _ | 6 | 3 | | | | |
| 14 | Q307044000 | JUNTA TORICA Ø 67.18x56.52x5.3 | O-RING Ø 67.18x56.52x5.3 | 4 | 4 | 4 | 4 | | | | |
| | | | | | | | | | | | |

| MOD. | LAVAVAJILLAS MODULARES<br>MODULAR DISHWASHERS | ZONA | NIVELES Y CALENTAMIENTO DE LAVADO<br>WASH LEVELS AND HEATING | PLANO | C-2146 |
|---|---|---|---|---|---|

| ITEM | CODIGO | DENOMINACION | TEXTO | FI-280<br>ECO-280 | FI-370<br>ECO-370 | FI-460<br>ECO-460 | FI-550<br>ECO-550 | | | | NOTAS |
|---|---|---|---|---|---|---|---|---|---|---|---|
| 15 | Z313602000 | SUJECION RESISTENCIA | RESISTOR FASTENING | 1 | 1 | 1 | 1 | | | | |
| | Q232040000 | ARANDELA A6 | WASHER A6 | 2 | 2 | 2 | 2 | | | | |
| | Q162040000 | TUERCA EXAGONAL M6 | HEXAGONAL NUT M6 | 2 | 2 | 2 | 2 | | | | |
| 16 | Z263002000 | VAINA INDICADOR COMPLETA | COMPLETE INDICATOR SHELL | 1 | 1 | 1 | 1 | | | | |
| | Q307048000 | JUNTA TORICA Ø 9.12X16.18X3.53 | O-RING Ø 9.12X16.18X3.53 | 2 | 2 | 2 | 2 | | | | |
| | Q162070000 | TUERCA EXAGONAL M12 | HEXAGONAL NUT M12 | 2 | 2 | 2 | 2 | | | | |

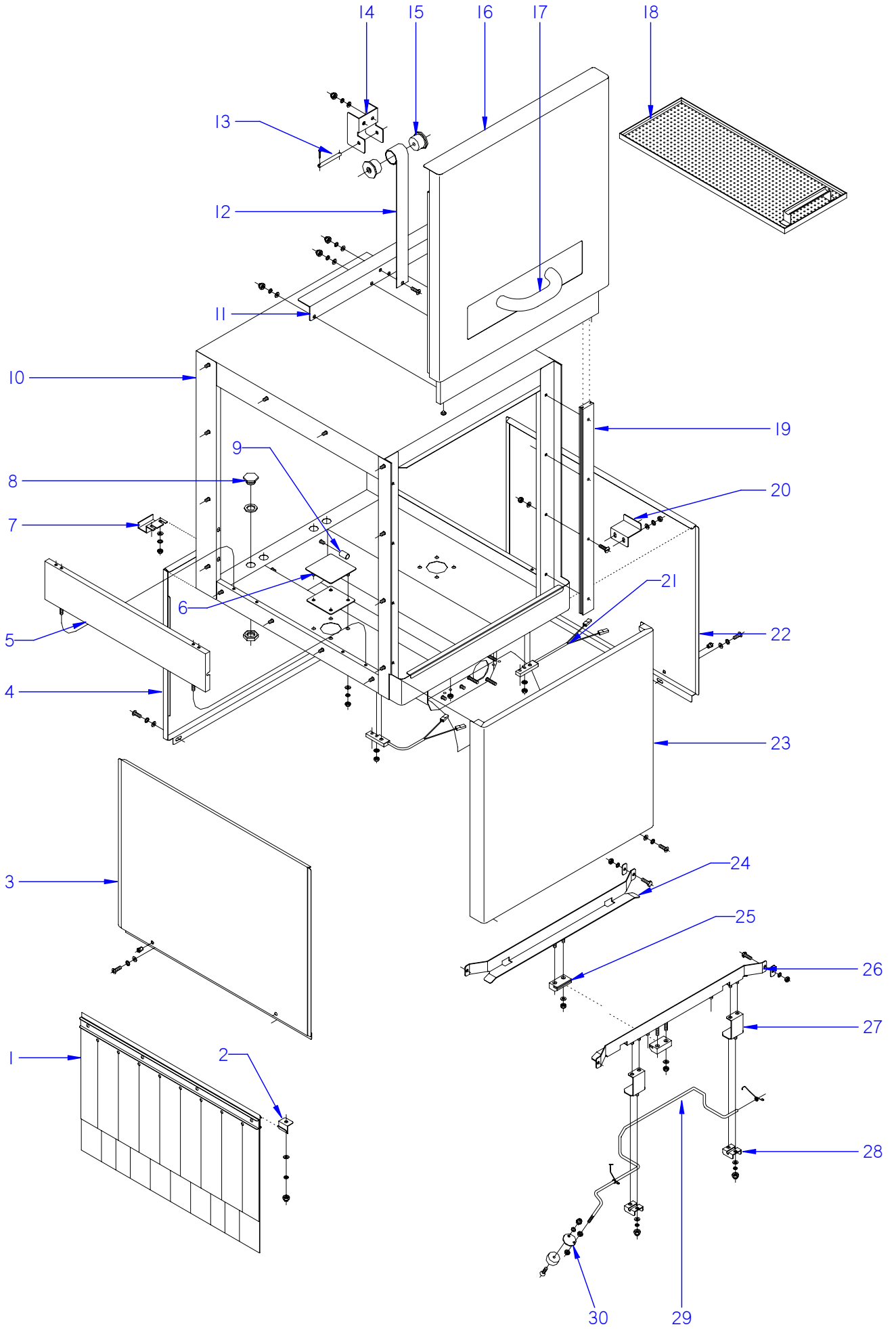


ITEM MARCADO EN COLOR = REPUESTO RECOMENDADO
COLOURED ITEM = RECOMMENDED SPARE PART

| N plano | Firma | Fecha | Aparato | | Lamina | |
|---|---|---|---|---|---|---|
| C-2147 | | 2008-11 | TUNEL DE PREACLARADO<br>LAVAVAJILLAS MODULARES | | 8 | Fagor Industrial S.Coop.<br>Onate |

| MOD. | LAVAVAJILLAS MODULARES<br>MODULAR DISHWASHERS | ZONA | TUNEL DE PREACLARADO / PRERINSE TUNNEL | PLANO | C-2147 |
|---|---|---|---|---|---|

| ITEM | CODIGO | DENOMINACION | TEXTO | FI-280 I<br>ECO-280 I | FI-280 D<br>ECO-280 D | FI-370 I<br>ECO-370 I | FI-370 D<br>ECO-370 D | FI-460 I<br>ECO-460 I | FI-460 D<br>ECO-460 D | FI-550 I<br>ECO-550 I | FI-550 D<br>ECO-550 D | NOTAS |
|---|---|---|---|---|---|---|---|---|---|---|---|---|
| 1 | Z276429000 | CORTINA INTERIOR COMPLETA | COMPLETE INTERIOR CURTAIN | 1 | 1 | 1 | 1 | 1 | 1 | 1 | 1 | |
| 2 | Z270326000 | SUJECION CORTINA | CURTAIN FASTENING | 2 | 2 | 2 | 2 | 2 | 2 | 2 | 2 | |
| | Q232040000 | ARANDELA A6 | WASHER A6 | 2 | 2 | 2 | 2 | 2 | 2 | 2 | 2 | |
| | Q262030000 | ARANDELA GROW. A5 A.304 | WASHER GROW. A5 A.304 | 2 | 2 | 2 | 2 | 2 | 2 | 2 | 2 | |
| | Q212031000 | TUERCA SOMBRERETE M5 | COWL NUT M5 | 2 | 2 | 2 | 2 | 2 | 2 | 2 | 2 | |
| 3 | Z312903000 | PANEL LATERAL | SIDE PANEL | _ | 1 | _ | 1 | _ | 1 | _ | 1 | |
| 4 | Z312913000 | PANEL POST. PREACLARADO IZDO | REAR PANEL LEFT PRERINSE | 1 | _ | 1 | _ | 1 | _ | 1 | _ | |
| 4 | Z312955000 | PANEL POST. PREACLARADO DCH | REAR PANEL RIGHT PRERINSE | _ | 1 | _ | 1 | _ | 1 | _ | 1 | |
| | Q302022000 | ARANDELA 16X6X1.2 A.304 | WASHER 16X6X1.2 A.304 | 6 | 6 | 6 | 6 | 6 | 6 | 6 | 6 | |
| | Q262040000 | ARANDELA GROW. A6 A.304 | WASHER GROW. A6 A.304 | 6 | 6 | 6 | 6 | 6 | 6 | 6 | 6 | |
| | Q162040000 | TUERCA EXAGONAL M6 | HEXAGONAL NUT M6 | 6 | 6 | 6 | 6 | 6 | 6 | 6 | 6 | |
| | Q152004000 | TORNILLO APLASTADO M5x13 A304 | FLAT HEADED BOLT M5x13 A304 | 24 | 24 | 24 | 24 | 24 | 24 | 24 | 24 | |
| | Q302022000 | ARANDELA 16X6X1.2 A.304 | WASHER 16X6X1.2 A.304 | 24 | 24 | 24 | 24 | 24 | 24 | 24 | 24 | |
| | Q411304000 | REMACHE AVIBULB Ø4,8 | AVIBULB RIVET Ø4.8 | 2 | 2 | 2 | 2 | 2 | 2 | 2 | 2 | |
| 5 | Z270337000 | SUPLEMENTO COMPLETO | COMPLETE SUPPLEMENT | 1 | 1 | 1 | 1 | 1 | 1 | 1 | 1 | |
| | Q232040000 | ARANDELA A6 | WASHER A6 | 4 | 4 | 4 | 4 | 4 | 4 | 4 | 4 | |
| | Q212031000 | TUERCA SOMBRERETE M5 | COWL NUT M5 | 4 | 4 | 4 | 4 | 4 | 4 | 4 | 4 | |
| | Q152004000 | TORNILLO APLASTADO M5x13 A304 | FLAT HEADED BOLT M5x13 A304 | 4 | 4 | 4 | 4 | 4 | 4 | 4 | 4 | |
| | Q262030000 | ARANDELA GROW. A5 A.304 | WASHER GROW. A5 A.304 | 4 | 4 | 4 | 4 | 4 | 4 | 4 | 4 | |
| 6 | Z311807000 | TAPA PREACLARADO COMPL. | COMPL. PRERINSE COVER | 1 | 1 | 1 | 1 | 1 | 1 | 1 | 1 | |
| | Z311806000 | JUNTA | SEAL | 1 | 1 | 1 | 1 | 1 | 1 | 1 | 1 | |
| | Q302022000 | ARANDELA 16X6X1.2 A.304 | WASHER 16X6X1.2 A.304 | 4 | 4 | 4 | 4 | 4 | 4 | 4 | 4 | |
| | Q262040000 | ARANDELA GROW. A6 A.304 | WASHER GROW. A6 A.304 | 4 | 4 | 4 | 4 | 4 | 4 | 4 | 4 | |
| | Q162040000 | TUERCA EXAGONAL M6 | HEXAGONAL NUT M6 | 4 | 4 | 4 | 4 | 4 | 4 | 4 | 4 | |
| 7 | Z312908000 | SUJECION PANEL PREACLARADO | PRERINSE PANEL FAST. | 2 | 2 | 2 | 2 | 2 | 2 | 2 | 2 | |
| 8 | Z311809000 | TAPON | COVER | 2 | 2 | 2 | 2 | 2 | 2 | 2 | 2 | |
| | Q307032000 | JUNTA 32X21X3 | JOINT 32X21X3 | 2 | 2 | 2 | 2 | 2 | 2 | 2 | 2 | |
| | Q223023000 | TUERCA EXAGONAL 5-8 LATON | HEX NUT 5-8 BRASS | 2 | 2 | 2 | 2 | 2 | 2 | 2 | 2 | |
| 9 | Z311821000 | APOYO BANDEJA | TRAY SUPPORT | 4 | 4 | 4 | 4 | 4 | 4 | 4 | 4 | |
| 10 | Z311801000 | CAJA PREACLARADO SOLDADA | WELDED PRERINSE BOX | 1 | 1 | 1 | 1 | 1 | 1 | 1 | 1 | |
| | | | | | | | | | | | | |

| MOD. | LAVAVAJILLAS MODULARES<br>MODULAR DISHWASHERS | ZONA | TUNEL DE PREACLARADO / PRERINSE TUNNEL | PLANO | C-2147 |
|---|---|---|---|---|---|

| ITEM | CODIGO | DENOMINACION | TEXTO | FI-280 I<br>ECO-280 I | FI-280 D<br>ECO-280 D | FI-370 I<br>ECO-370 I | FI-370 D<br>ECO-370 D | FI-460 I<br>ECO-460 I | FI-460 D<br>ECO-460 D | FI-550 I<br>ECO-550 I | FI-550 D<br>ECO-550 D | NOTAS |
|---|---|---|---|---|---|---|---|---|---|---|---|---|
| 11 | Z310533000 | AMARRE RESORTE PREACLARAD. | PRERINSE SPRING FASTENING | 1 | 1 | 1 | 1 | 1 | 1 | 1 | 1 | ELIMINA. 10.02.09 |
| 11 | Z270517000 | AMARRE RESORTE | SPRING FASTENING | 1 | 1 | 1 | 1 | 1 | 1 | 1 | 1 | INTROD. 10.02.09 |
| | Q232040000 | ARANDELA A6 | WASHER A6 | 10 | 10 | 10 | 10 | 10 | 10 | 10 | 10 | |
| | Q262030000 | ARANDELA GROW. A5 A.304 | WASHER GROW. A5 A.304 | 10 | 10 | 10 | 10 | 10 | 10 | 10 | 10 | |
| | Q212031000 | TUERCA SOMBRERETE M5 | COWL NUT M5 | 10 | 10 | 10 | 10 | 10 | 10 | 10 | 10 | |
| 12 | Z270513000 | RESORTE FUERZA CONSTANTE | CONSTANT FORCE SPRING | 1 | 1 | 1 | 1 | 1 | 1 | 1 | 1 | |
| 13 | Z270514000 | EJE RESORTE | SPRING SHAFT | 1 | 1 | 1 | 1 | 1 | 1 | 1 | 1 | |
| | Q352001000 | PASADOR DE ALETAS 2X20 | COTTER PIN 2X20 | 2 | 2 | 2 | 2 | 2 | 2 | 2 | 2 | |
| 14 | Z270511000 | SOPORTE RESORTE | SPRING SUPPORT | 1 | 1 | 1 | 1 | 1 | 1 | 1 | 1 | |
| | Q232040000 | ARANDELA A6 | WASHER A6 | 2 | 2 | 2 | 2 | 2 | 2 | 2 | 2 | |
| | Q262030000 | ARANDELA GROW. A5 A.304 | WASHER GROW. A5 A.304 | 2 | 2 | 2 | 2 | 2 | 2 | 2 | 2 | |
| | Q212031000 | TUERCA SOMBRERETE M5 | COWL NUT M5 | 2 | 2 | 2 | 2 | 2 | 2 | 2 | 2 | |
| 15 | Z270512000 | ENCAJE RESORTE | SPRING SOCKET | 2 | 2 | 2 | 2 | 2 | 2 | 2 | 2 | |
| 16 | Z310521000 | PUERTA PREACLARADO MONTAD. | PRERINSE DOOR MOUNTED | 1 | 1 | 1 | 1 | 1 | 1 | 1 | 1 | |
| | Z270516000 | TOPE | STOP | 2 | 2 | 2 | 2 | 2 | 2 | 2 | 2 | |
| | Z270531000 | SUJECION PUERTA | DOOR FASTENING | 1 | 1 | 1 | 1 | 1 | 1 | 1 | 1 | |
| 17 | Z400540000 | ASA PUERTA COMPLETA | COMPLETE DOOR HANDLE | 1 | 1 | 1 | 1 | 1 | 1 | 1 | 1 | |
| 18 | Z310808000 | BANDEJA PREACLARADO | PRERINSE TRAY | 1 | 1 | 1 | 1 | 1 | 1 | 1 | 1 | |
| 19 | Z270336000 | GUIA PUERTA | DOOR GUIDE | 2 | 2 | 2 | 2 | 2 | 2 | 2 | 2 | |
| | Q152045000 | TORNILLO AMARRE M6X25 | FASTENING BOLT M6X25 | 8 | 8 | 8 | 8 | 8 | 8 | 8 | 8 | |
| | Q232040000 | ARANDELA A6 | WASHER A6 | 8 | 8 | 8 | 8 | 8 | 8 | 8 | 8 | |
| | Q222012000 | TUERCA AUTOBLOCANTE M6 | SELF-LOCKING NUT M6 | 8 | 8 | 8 | 8 | 8 | 8 | 8 | 8 | |
| 20 | Z312917000 | APOYO PANEL DCHO. | RIGHT PANEL SUPPORT | 2 | _ | 2 | _ | 2 | _ | 2 | _ | |
| | Q262040000 | ARANDELA GROW. A6 A.304 | WASHER GROW. A6 A.304 | 4 | _ | 4 | _ | 4 | _ | 4 | _ | |
| | Q162040000 | TUERCA EXAGONAL M6 | HEXAGONAL NUT M6 | 4 | _ | 4 | _ | 4 | _ | 4 | _ | |
| 21 | Z100522000 | INTERRUPTOR MAGNETICO AC | MAGNETIC SWITCH AC | 2 | 2 | 2 | 2 | 2 | 2 | 2 | 2 | |
| | Q242020000 | ARANDELA ABANICO A4 A.304 | FAN WASHER A4 A.304 | 4 | 4 | 4 | 4 | 4 | 4 | 4 | 4 | |
| | Q162020000 | TUERCA EXAGONAL M4 | HEXAGONAL NUT M4 | 4 | 4 | 4 | 4 | 4 | 4 | 4 | 4 | |
| 22 | Z312903000 | PANEL LATERAL | SIDE PANEL | 1 | _ | 1 | _ | 1 | _ | 1 | _ | |
| 23 | Z332901000 | PANEL FRONTAL PRELAVADO | FRONT PREWASH PANEL | 1 | 1 | 1 | 1 | 1 | 1 | 1 | 1 | |
| 24 | Z315029000 | GUIA PREACLARADO POSTERIOR | REAR PRERINSE GUIDE | 1 | 1 | 1 | 1 | 1 | 1 | 1 | 1 | |

| MOD. | LAVAVAJILLAS MODULARES<br>MODULAR DISHWASHERS | ZONA | TUNEL DE PREACLARADO / PRERINSE TUNNEL | PLANO | C-2147 |
|---|---|---|---|---|---|

| ITEM | CODIGO | DENOMINACION | TEXTO | FI-280 I<br>ECO-280 I | FI-280 D<br>ECO-280 D | FI-370 I<br>ECO-370 I | FI-370 D<br>ECO-370 D | FI-460 I<br>ECO-460 I | FI-460 D<br>ECO-460 D | FI-550 I<br>ECO-550 I | FI-550 D<br>ECO-550 D | NOTAS |
|---|---|---|---|---|---|---|---|---|---|---|---|---|
| 25 | Z275075000 | DESLIZAMIENTO GUIAS | GUIDE SLIDE | 2 | 2 | 2 | 2 | 2 | 2 | 2 | 2 | |
| | Q232040000 | ARANDELA A6 | WASHER A6 | 4 | 4 | 4 | 4 | 4 | 4 | 4 | 4 | |
| | Q222012000 | TUERCA AUTOBLOCANTE M6 | SELF-LOCKING NUT M6 | 4 | 4 | 4 | 4 | 4 | 4 | 4 | 4 | |
| 26 | Z315038000 | GUIA PREACLARADO ANTER. IZDO. | FRONT LEFT PRERINSE GUIDE | 1 | _ | 1 | _ | 1 | _ | 1 | _ | |
| 26 | Z315027000 | GUIA PREACLARADO ANTE. DCHO. | FRONT RIGHT PRERINSE GUIDE | _ | 1 | _ | 1 | _ | 1 | _ | 1 | |
| 27 | Z271211000 | U SOPORTE PULSADOR | BUTTON U-SUPPORT | 2 | 2 | 2 | 2 | 2 | 2 | 2 | 2 | |
| | Q232040000 | ARANDELA A6 | WASHER A6 | 4 | 4 | 4 | 4 | 4 | 4 | 4 | 4 | |
| | Q262030000 | ARANDELA GROW. A5 A.304 | WASHER GROW. A5 A.304 | 4 | 4 | 4 | 4 | 4 | 4 | 4 | 4 | |
| | Q212031000 | TUERCA SOMBRERETE M5 | COWL NUT M5 | 4 | 4 | 4 | 4 | 4 | 4 | 4 | 4 | |
| 28 | Z271201000 | SOPORTE PULSADOR | BUTTON SUPPORT | 2 | 2 | 2 | 2 | 2 | 2 | 2 | 2 | |
| | Q232040000 | ARANDELA A6 | WASHER A6 | 4 | 4 | 4 | 4 | 4 | 4 | 4 | 4 | |
| | Q262030000 | ARANDELA GROW. A5 A.304 | WASHER GROW. A5 A.304 | 4 | 4 | 4 | 4 | 4 | 4 | 4 | 4 | |
| | Q212031000 | TUERCA SOMBRERETE M5 | COWL NUT M5 | 4 | 4 | 4 | 4 | 4 | 4 | 4 | 4 | |
| 29 | Z311202000 | PULSADOR ACLARADO IZDO. | LEFT RINSE BUTTON | 1 | _ | 1 | _ | 1 | _ | 1 | _ | |
| 29 | Z311222000 | PULSADOR ACLARADO DCHO. | RIGHT RINSE BUTTON | _ | 1 | _ | 1 | _ | 1 | _ | 1 | |
| | Z271203000 | MUELLE TORSION IZDO 27601 | LEFT TORSION SPRING 27601 | 1 | _ | 1 | _ | 1 | _ | 1 | _ | |
| | Z271204000 | MUELLE TORSION DCHO 27561 | RIGHT TORS.ION SPRING 27561 | _ | 1 | _ | 1 | _ | 1 | _ | 1 | |
| 30 | Z271207000 | IMAN | MAGNET | 1 | 1 | 1 | 1 | 1 | 1 | 1 | 1 | |
| | Z271206000 | SOPORTE IMAN | MAGNET BRACKET | 1 | 1 | 1 | 1 | 1 | 1 | 1 | 1 | |
| | Q072033000 | TORN.G.S. M5X20 A304 | BOLT G.S. M5X20 A304 | 1 | 1 | 1 | 1 | 1 | 1 | 1 | 1 | |
| | Q212031000 | TUERCA SOMBRERETE M5 | COWL NUT M5 | 1 | 1 | 1 | 1 | 1 | 1 | 1 | 1 | |
| | Q262030000 | ARANDELA GROW. A5 A.304 | WASHER GROW. A5 A.304 | 1 | 1 | 1 | 1 | 1 | 1 | 1 | 1 | |
| | Q162040000 | TUERCA EXAGONAL M6 | HEXAGONAL NUT M6 | 2 | 2 | 2 | 2 | 2 | 2 | 2 | 2 | |
| | | | | | | | | | | | | |
| | | | | | | | | | | | | |
| | | | | | | | | | | | | |
| | | | | | | | | | | | | |
| | | | | | | | | | | | | |
| | | | | | | | | | | | | |
| | | | | | | | | | | | | |
| | | | | | | | | | | | | |

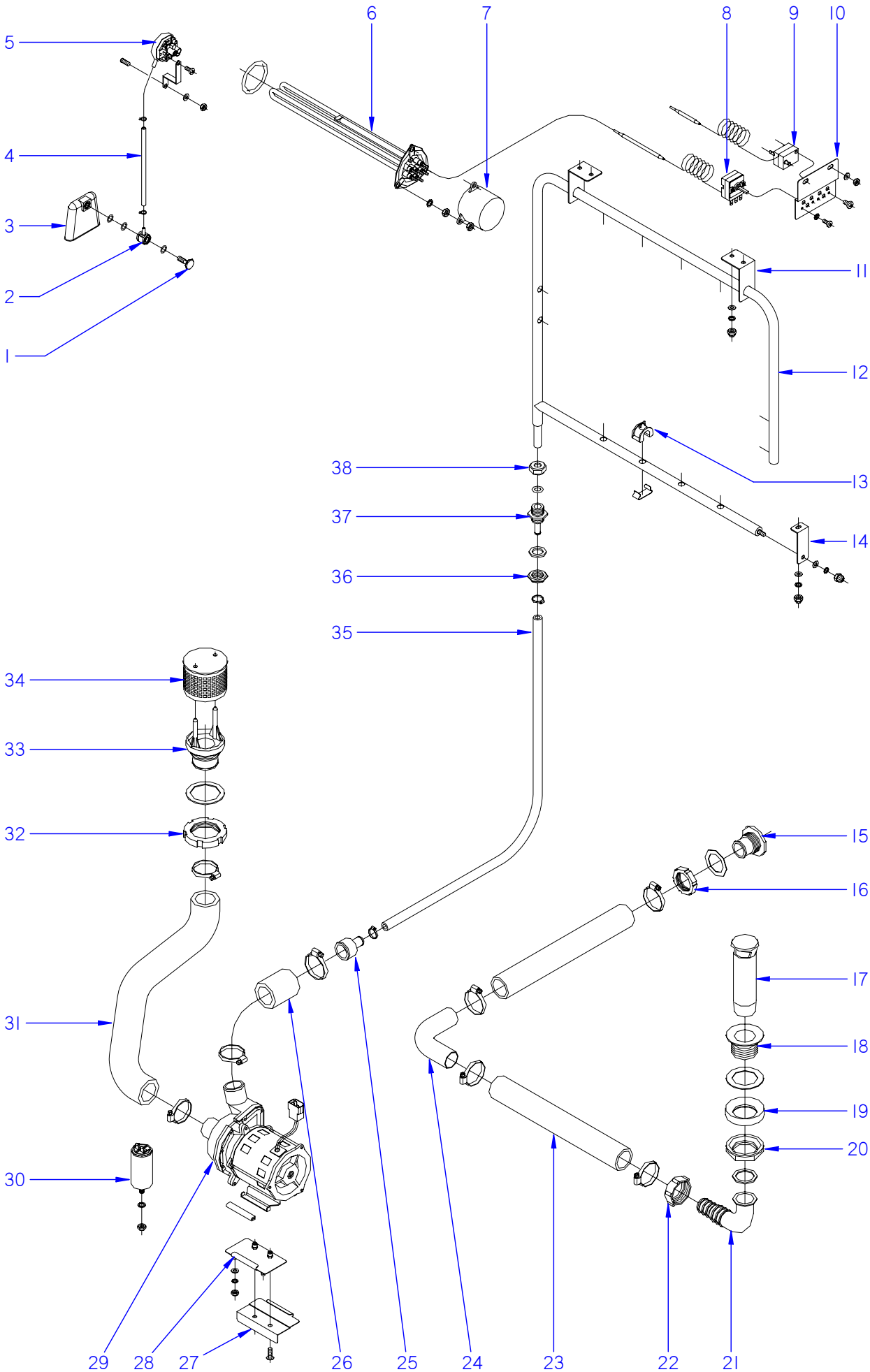


ITEM MARCADO EN COLOR = REPUESTO RECOMENDADO
COLOURED ITEM = RECOMMENDED SPARE PART

| N plano | Firma | Fecha | Aparato | | Lamina | |
|---|---|---|---|---|---|---|
| C-2148 | | 2008-11 | PARTE FUNCIONAL DE PREACLARADO | LAVAVAJILLAS MODULARES | 9 | Fagor Industrial S.Coop. FAGOR Oñate |

| MOD. | LAVAVAJILLAS MODULARES<br>MODULAR DISHWASHERS | ZONA | PARTE FUNCIONAL DE PREACLARADO<br>FUNCTIONAL PART OF PRERINSE | PLANO | C-2148 |
|---|---|---|---|---|---|

| ITEM | CODIGO | DENOMINACION | TEXTO | FI-280 I | FI-280 D | FI-370 I | FI-370 D | FI-460 I | FI-460 D | FI-550 I | FI-550 D | NOTAS |
|---|---|---|---|---|---|---|---|---|---|---|---|---|
| 1 | Z203013000 | TORNILLO PRESOSTATO | PRESSURE SWITCH BOLT | 1 | 1 | 1 | 1 | 1 | 1 | 1 | 1 | |
| | Q307003000 | JUNTA TORICA 16.01X10.77X2.62 | O-RING 16.01X10.77X2.62 | 2 | 2 | 2 | 2 | 2 | 2 | 2 | 2 | |
| 2 | Z203012000 | EMPALME PRESOSTATO | PRESSURE SWITCH CONNEX | 1 | 1 | 1 | 1 | 1 | 1 | 1 | 1 | |
| 3 | Z203011000 | CAMARA PRESOSTATO | PRESSURE SWITCH | 1 | 1 | 1 | 1 | 1 | 1 | 1 | 1 | |
| 4 | 3702400000 | TUBO GOMA NEGRO D 8*4 | BLACK RUBBER PIPE Ø 8*4 | 1 | 1 | 1 | 1 | 1 | 1 | 1 | 1 | |
| | P102154000 | BRIDA ELASTICA TUBO | ELASTIC PIPE FLANGE | 2 | 2 | 2 | 2 | 2 | 2 | 2 | 2 | |
| 5 | Z313006000 | PRESOSTATO SIMPLE | SIMPLE PRESSURE SWITCH | 1 | 1 | 1 | 1 | 1 | 1 | 1 | 1 | |
| | Z602923000 | SOPORTE PRESOSTATO | PRESSURE SWITCH SUPPORT | 1 | 1 | 1 | 1 | 1 | 1 | 1 | 1 | |
| | Q082032000 | TORNILLO ALOMADO BZ-3,5X9,5 | CURVED SCREW BZ-3.5x9.5 | 1 | 1 | 1 | 1 | 1 | 1 | 1 | 1 | |
| | Q232040000 | ARANDELA A6 | WASHER A6 | 1 | 1 | 1 | 1 | 1 | 1 | 1 | 1 | |
| | Q162040000 | TUERCA EXAGONAL M6 | HEXAGONAL NUT M6 | 1 | 1 | 1 | 1 | 1 | 1 | 1 | 1 | |
| 6 | Z313601000 | RESISTENCIA PREACLARADO 230V. | PRERINSE RESISTOR 230V | 1 | 1 | 1 | 1 | 1 | 1 | 1 | 1 | |
| | Q307044000 | JUNTA TORICA Ø 67.18x56.52x5.3 | O-RING Ø 67.18x56.52x5.3 | 1 | 1 | 1 | 1 | 1 | 1 | 1 | 1 | |
| 7 | Z101723000 | CAPERUZA RESISTENCIA | RESISTOR HOOD | 1 | 1 | 1 | 1 | 1 | 1 | 1 | 1 | |
| | Q163140000 | TUERCA EXAGONAL M6 LATON | HEXAGONAL NUT M6 BRASS | 6 | 6 | 6 | 6 | 6 | 6 | 6 | 6 | |
| | Q262040000 | ARANDELA GROW. A6 A.304 | WASHER GROW. A6 A.304 | 3 | 3 | 3 | 3 | 3 | 3 | 3 | 3 | |
| S/Nº | Z273073000 | REGULACION TERMOSTATO 70ºC | THERMOSTAT CONTROL 70ºC | 2 | 2 | 2 | 2 | 2 | 2 | 2 | 2 | ELIMINAD. 30.11.12 |
| S/Nº | 12047243 | REGULACION A 70ºC Tc 85ºC | CONTROL 70ºC Tc 85ºC | 2 | 2 | 2 | 2 | 2 | 2 | 2 | 2 | INTROD. 30.11.12 |
| 8 | Z203014000 | TERMOSTATO CALDERIN | WASH DRUM THERMOSTAT | 1 | 1 | 1 | 1 | 1 | 1 | 1 | 1 | ELIMINAD. 30.11.12 |
| 8 | 12040858 | TERMOSTATO CALDERIN | WASH DRUM THERMOSTAT | 1 | 1 | 1 | 1 | 1 | 1 | 1 | 1 | INTROD. 30.11.12 |
| 9 | Z276365000 | TERMOSTATO 150ºC | THERMOSTAT 150ºC | 1 | 1 | 1 | 1 | 1 | 1 | 1 | 1 | |
| 10 | Z273037000 | SOPORTE TERMOSTATO A.C. | A.C. THERMOSTAT SUPPORT | 1 | 1 | 1 | 1 | 1 | 1 | 1 | 1 | |
| 11 | Z311913000 | SOPORTE SUPER. PREACLARADO | UPPER PRERINSE SUPPORT | 2 | 2 | 2 | 2 | 2 | 2 | 2 | 2 | |
| | Q262030000 | ARANDELA GROW. A5 A.304 | WASHER GROW. A5 A.304 | 4 | 4 | 4 | 4 | 4 | 4 | 4 | 4 | |
| | Q212031000 | TUERCA SOMBRERETE M5 | COWL NUT M5 | 4 | 4 | 4 | 4 | 4 | 4 | 4 | 4 | |
| 12 | Z311910000 | ARBOL PREACLARADO | PRERINSE CAM | 1 | 1 | 1 | 1 | 1 | 1 | 1 | 1 | |
| 13 | Z311831000 | TOBERA PREACLARADO | PRERINSE NOZZLE | 12 | 12 | 12 | 12 | 12 | 12 | 12 | 12 | |
| | Z400711000 | ENGANCHE TOBERA LAVADO | WASH NOZZLE CATCH | 12 | 12 | 12 | 12 | 12 | 12 | 12 | 12 | |
| 14 | Z271912000 | AMARRE INFERIOR ACLARADO | LOWER RINSE FASTENING | 1 | 1 | 1 | 1 | 1 | 1 | 1 | 1 | |
| | Q262030000 | ARANDELA GROW. A5 A.304 | WASHER GROW. A5 A.304 | 2 | 2 | 2 | 2 | 2 | 2 | 2 | 2 | |
| | Q212031000 | TUERCA SOMBRERETE M5 | COWL NUT M5 | 2 | 2 | 2 | 2 | 2 | 2 | 2 | 2 | |

| MOD. | LAVAVAJILLAS MODULARES<br>MODULAR DISHWASHERS | ZONA | PARTE FUNCIONAL DE PREACLARADO<br>FUNCTIONAL PART OF PRERINSE | PLANO | C-2148 |
|---|---|---|---|---|---|

| ITEM | CODIGO | DENOMINACION | TEXTO | ECO-280 I | ECO-280 D | ECO-370 I | ECO-370 D | ECO-460 I | ECO-460 D | ECO-550 I | ECO-550 D | NOTAS |
|---|---|---|---|---|---|---|---|---|---|---|---|---|
| 1 | Z203013000 | TORNILLO PRESOSTATO | PRESSURE SWITCH BOLT | 1 | 1 | 1 | 1 | 1 | 1 | 1 | 1 | |
| | Q307003000 | JUNTA TORICA 16.01X10.77X2.62 | O-RING 16.01X10.77X2.62 | 2 | 2 | 2 | 2 | 2 | 2 | 2 | 2 | |
| 2 | Z203012000 | EMPALME PRESOSTATO | PRESSURE SWITCH CONNEX | 1 | 1 | 1 | 1 | 1 | 1 | 1 | 1 | |
| 3 | Z203011000 | CAMARA PRESOSTATO | PRESSURE SWITCH | 1 | 1 | 1 | 1 | 1 | 1 | 1 | 1 | |
| 4 | 3702400000 | TUBO GOMA NEGRO D 8*4 | BLACK RUBBER PIPE Ø 8*4 | 1 | 1 | 1 | 1 | 1 | 1 | 1 | 1 | |
| | P102154000 | BRIDA ELASTICA TUBO | ELASTIC PIPE FLANGE | 2 | 2 | 2 | 2 | 2 | 2 | 2 | 2 | |
| 5 | Z313006000 | PRESOSTATO SIMPLE | SIMPLE PRESSURE SWITCH | 1 | 1 | 1 | 1 | 1 | 1 | 1 | 1 | |
| | Z602923000 | SOPORTE PRESOSTATO | PRESSURE SWITCH SUPPORT | 1 | 1 | 1 | 1 | 1 | 1 | 1 | 1 | |
| | Q082032000 | TORNILLO ALOMADO BZ-3,5X9,5 | CURVED SCREW BZ-3.5x9.5 | 1 | 1 | 1 | 1 | 1 | 1 | 1 | 1 | |
| | Q232040000 | ARANDELA A6 | WASHER A6 | 1 | 1 | 1 | 1 | 1 | 1 | 1 | 1 | |
| | Q162040000 | TUERCA EXAGONAL M6 | HEXAGONAL NUT M6 | 1 | 1 | 1 | 1 | 1 | 1 | 1 | 1 | |
| 6 | Z313601000 | RESISTENCIA PREACLARADO 230V. | PRERINSE RESISTOR 230V | 1 | 1 | 1 | 1 | 1 | 1 | 1 | 1 | |
| | Q307044000 | JUNTA TORICA Ø 67.18x56.52x5.3 | O-RING Ø 67.18x56.52x5.3 | 1 | 1 | 1 | 1 | 1 | 1 | 1 | 1 | |
| 7 | Z101723000 | CAPERUZA RESISTENCIA | RESISTOR HOOD | 1 | 1 | 1 | 1 | 1 | 1 | 1 | 1 | |
| | Q163140000 | TUERCA EXAGONAL M6 LATON | HEXAGONAL NUT M6 BRASS | 6 | 6 | 6 | 6 | 6 | 6 | 6 | 6 | |
| | Q262040000 | ARANDELA GROW. A6 A.304 | WASHER GROW. A6 A.304 | 3 | 3 | 3 | 3 | 3 | 3 | 3 | 3 | |
| S/Nº | Z273073000 | REGULACION TERMOSTATO 70ºC | THERMOSTAT CONTROL 70ºC | 1 | 1 | 1 | 1 | 1 | 1 | 1 | 1 | ELIMINAD. 30.11.12 |
| S/Nº | 12047243 | REGULACION A 70ºC Tc 85ºC | CONTROL 70ºC Tc 85ºC | 1 | 1 | 1 | 1 | 1 | 1 | 1 | 1 | INTROD. 30.11.12 |
| 9 | Z276365000 | TERMOSTATO 150ºC | THERMOSTAT 150ºC | 1 | 1 | 1 | 1 | 1 | 1 | 1 | 1 | |
| 10 | Z273037000 | SOPORTE TERMOSTATO A.C. | A.C. THERMOSTAT SUPPORT | 1 | 1 | 1 | 1 | 1 | 1 | 1 | 1 | |
| 11 | Z311913000 | SOPORTE SUPER. PREACLARADO | UPPER PRERINSE SUPPORT | 2 | 2 | 2 | 2 | 2 | 2 | 2 | 2 | |
| | Q262030000 | ARANDELA GROW. A5 A.304 | WASHER GROW. A5 A.304 | 4 | 4 | 4 | 4 | 4 | 4 | 4 | 4 | |
| | Q212031000 | TUERCA SOMBRERETE M5 | COWL NUT M5 | 4 | 4 | 4 | 4 | 4 | 4 | 4 | 4 | |
| 12 | Z311910000 | ARBOL PREACLARADO | PRERINSE CAM | 1 | 1 | 1 | 1 | 1 | 1 | 1 | 1 | |
| 13 | Z311831000 | TOBERA PREACLARADO | PRERINSE NOZZLE | 12 | 12 | 12 | 12 | 12 | 12 | 12 | 12 | |
| | Z400711000 | ENGANCHE TOBERA LAVADO | WASH NOZZLE CATCH | 12 | 12 | 12 | 12 | 12 | 12 | 12 | 12 | |
| 14 | Z271912000 | AMARRE INFERIOR ACLARADO | LOWER RINSE FASTENING | 1 | 1 | 1 | 1 | 1 | 1 | 1 | 1 | |
| | Q262030000 | ARANDELA GROW. A5 A.304 | WASHER GROW. A5 A.304 | 2 | 2 | 2 | 2 | 2 | 2 | 2 | 2 | |
| | Q212031000 | TUERCA SOMBRERETE M5 | COWL NUT M5 | 2 | 2 | 2 | 2 | 2 | 2 | 2 | 2 | |
| | | | | | | | | | | | | |
| | | | | | | | | | | | | |

| MOD. | LAVAVAJILLAS MODULARES<br>MODULAR DISHWASHERS | ZONA | PARTE FUNCIONAL DE PREACLARADO<br>FUNCTIONAL PART OF PRERINSE | PLANO | C-2148 |
|---|---|---|---|---|---|

| ITEM | CODIGO | DENOMINACION | TEXTO | FI-280 I<br>ECO-280 I | FI-280 D<br>ECO-280 D | FI-370 I<br>ECO-370 I | FI-370 D<br>ECO-370 D | FI-460 I<br>ECO-460 I | FI-460 D<br>ECO-460 D | FI-550 I<br>ECO-550 I | FI-550 D<br>ECO-550 D | NOTAS |
|---|---|---|---|---|---|---|---|---|---|---|---|---|
| 15 | Z106355000 | PASAMUROS | BUSHING | 1 | 1 | 1 | 1 | 1 | 1 | 1 | 1 | |
| | Q307011000 | ARANDELA 56X39X1 | WASHER 56X39X1 | 1 | 1 | 1 | 1 | 1 | 1 | 1 | 1 | |
| 16 | Q228006000 | TUERCA DISTRIBUIDOR | DISTRIBUTOR NUT | 1 | 1 | 1 | 1 | 1 | 1 | 1 | 1 | |
| 17 | Z652101000 | ALIVIADERO | OVERFLOW | 1 | 1 | 1 | 1 | 1 | 1 | 1 | 1 | |
| 18 | Z102104000 | VALVULA DESAGUE | DRAINAGE VALVE | 1 | 1 | 1 | 1 | 1 | 1 | 1 | 1 | |
| | Q307009000 | ARANDELA 70X48X1.5 | WASHER 70X48X1.5 | 1 | 1 | 1 | 1 | 1 | 1 | 1 | 1 | |
| 19 | Q307026000 | JUNTA ESPECIAL 2012592 | SPECIAL JOINT 2012592 | 1 | 1 | 1 | 1 | 1 | 1 | 1 | 1 | |
| 20 | Z702101000 | TUERCA R.11/2 DELRIN | R.11/2 DELRIN NUT | 1 | 1 | 1 | 1 | 1 | 1 | 1 | 1 | |
| | Q307027000 | JUNTA 45X35X2 | JOINT 45X35X2 | 1 | 1 | 1 | 1 | 1 | 1 | 1 | 1 | |
| 21 | Z602101000 | CODO DESAGUE | DRAINAGE L-BEND | 1 | 1 | 1 | 1 | 1 | 1 | 1 | 1 | |
| 22 | Z602102000 | TUERCA | NUT | 1 | 1 | 1 | 1 | 1 | 1 | 1 | 1 | |
| 23 | Z310912000 | MANGUERA COMUNICACION | COMMUNICATION HOSE | 2 | 2 | 2 | 2 | 2 | 2 | 2 | 2 | |
| | Q881307000 | ABRAZADERA 40-60 | CLAMP 40-60 | 4 | 4 | 4 | 4 | 4 | 4 | 4 | 4 | |
| 24 | Z310932000 | CODO EMPALME | CONNECTION ELBOW | 1 | 1 | 1 | 1 | 1 | 1 | 1 | 1 | |
| 25 | Z162312000 | REDUCCION | REDUCTION | 1 | 1 | 1 | 1 | 1 | 1 | 1 | 1 | |
| 26 | Z162301000 | CONDUCTO ASPIRAC. IMPULSION | EXTRACTOR PIPE. IMPULSE | 1 | 1 | 1 | 1 | 1 | 1 | 1 | 1 | |
| | Q881307000 | ABRAZADERA 40-60 | CLAMP 40-60 | 2 | 2 | 2 | 2 | 2 | 2 | 2 | 2 | |
| 27 | Z162315000 | SOPORTE MOTOBOMBA COMPL. | COMPL. MOTOR PUMP SUPPORT | 1 | 1 | 1 | 1 | 1 | 1 | 1 | 1 | |
| 28 | Z162313000 | AMARRE MOTOBOMBA COMPLET. | COMPL. MOTOR PUMP FASTENI | 1 | 1 | 1 | 1 | 1 | 1 | 1 | 1 | |
| | Q152004000 | TORNILLO APLASTADO M5x13 A304 | FLAT HEADED BOLT M5x13 A304 | 2 | 2 | 2 | 2 | 2 | 2 | 2 | 2 | |
| | Q262040000 | ARANDELA GROW. A6 A.304 | WASHER GROW. A6 A.304 | 3 | 3 | 3 | 3 | 3 | 3 | 3 | 3 | |
| | Q012042000 | TORNILLO EXAGONAL M6X15 | HEXAGONAL BOLT M6x15 | 2 | 2 | 2 | 2 | 2 | 2 | 2 | 2 | |
| | Q232040000 | ARANDELA A6 | WASHER A6 | 3 | 3 | 3 | 3 | 3 | 3 | 3 | 3 | |
| | Q162040000 | TUERCA EXAGONAL M6 | HEXAGONAL NUT M6 | 2 | 2 | 2 | 2 | 2 | 2 | 2 | 2 | |
| | Q302022000 | ARANDELA 16X6X1.2 A.304 | WASHER 16X6X1.2 A.304 | 2 | 2 | 2 | 2 | 2 | 2 | 2 | 2 | |
| | Q221343000 | REMACHE EXAGONAL M6 | HEXAGONAL RIVET M6 | 2 | 2 | 2 | 2 | 2 | 2 | 2 | 2 | |
| 29 | Z401001000 | BOMBA LAVADO | WASH PUMP | 1 | 1 | 1 | 1 | 1 | 1 | 1 | 1 | |
| | Z281112000 | PROTECTOR MOTOBOMBA | MOTOR PUMP GUARD | 1 | 1 | 1 | 1 | 1 | 1 | 1 | 1 | |
| | 3701700000 | PERFIL GOMA U 9*4 | RUBBER PROFILE U 9*4 | 2 | 2 | 2 | 2 | 2 | 2 | 2 | 2 | |
| 30 | V817100000 | CONDENSADOR 6 M.F. | CONDENSER 6 M.F. | 1 | 1 | 1 | 1 | 1 | 1 | 1 | 1 | |
| | | | | | | | | | | | | |

| MOD. | LAVAVAJILLAS MODULARES<br>MODULAR DISHWASHERS | ZONA | PARTE FUNCIONAL DE PREACLARADO<br>FUNCTIONAL PART OF PRERINSE | PLANO | C-2148 |
|---|---|---|---|---|---|

| ITEM | CODIGO | DENOMINACION | TEXTO | FI-280 I<br>ECO-280 I | FI-280 D<br>ECO-280 D | FI-370 I<br>ECO-370 I | FI-370 D<br>ECO-370 D | FI-460 I<br>ECO-460 I | FI-460 D<br>ECO-460 D | FI-550 I<br>ECO-550 I | FI-550 D<br>ECO-550 D | NOTAS |
|---|---|---|---|---|---|---|---|---|---|---|---|---|
| 31 | Z310911000 | CONDUCTO ASPIRAC. PREACL. IZ | PRERINSE INTAKE PIPE LEFT | 1 | _ | 1 | _ | 1 | _ | 1 | _ | |
| 31 | Z310931000 | CONDUCTO ASPIRAC. PREACL. D, | PRERINSE INTAKE PIPE RIGHT | _ | 1 | _ | 1 | _ | 1 | _ | 1 | |
| | Q881324000 | ABRAZADERA 50-70L | CLAMP 50-70L | 2 | 2 | 2 | 2 | 2 | 2 | 2 | 2 | |
| 32 | Q228005000 | TUERCA RANURADA M49X2.5 | GROOVED NUT M49X2.5 | 1 | 1 | 1 | 1 | 1 | 1 | 1 | 1 | |
| | Q307009000 | ARANDELA 70X48X1.5 | WASHER 70X48X1.5 | 1 | 1 | 1 | 1 | 1 | 1 | 1 | 1 | |
| 33 | Z600905000 | PASAMUROS ASPIRACION | EXTRACTOR BUSHING | 1 | 1 | 1 | 1 | 1 | 1 | 1 | 1 | |
| 34 | Z600906000 | FILTRO | FILTER | 1 | 1 | 1 | 1 | 1 | 1 | 1 | 1 | |
| 35 | 3715300000 | TUBO GOMA 14x24 | RUBBER PIPE 14x24 | 1 | 1 | 1 | 1 | 1 | 1 | 1 | 1 | |
| | Q881336000 | ABRAZADERA 16-27 | CLAMP 16-27 | 2 | 2 | 2 | 2 | 2 | 2 | 2 | 2 | |
| 36 | Q223023000 | TUERCA EXAGONAL 5-8 LATON | HEX NUT 5-8 BRASS | 1 | 1 | 1 | 1 | 1 | 1 | 1 | 1 | |
| | Q307032000 | JUNTA Ø32X21X3 | JOINT Ø32X21X3 | 1 | 1 | 1 | 1 | 1 | 1 | 1 | 1 | |
| 37 | Z281901000 | PASAMUROS ACLARADO | RINSE BUSHING | 1 | 1 | 1 | 1 | 1 | 1 | 1 | 1 | |
| 38 | Q223108000 | TUERCA M.24X2.5 | NUT M.24X2.5 | 1 | 1 | 1 | 1 | 1 | 1 | 1 | 1 | |
| | Q307063000 | JUNTA TORICA 12.29X19.35X3.53 | O-RING 12.29X19.35X3.53 | 1 | 1 | 1 | 1 | 1 | 1 | 1 | 1 | |

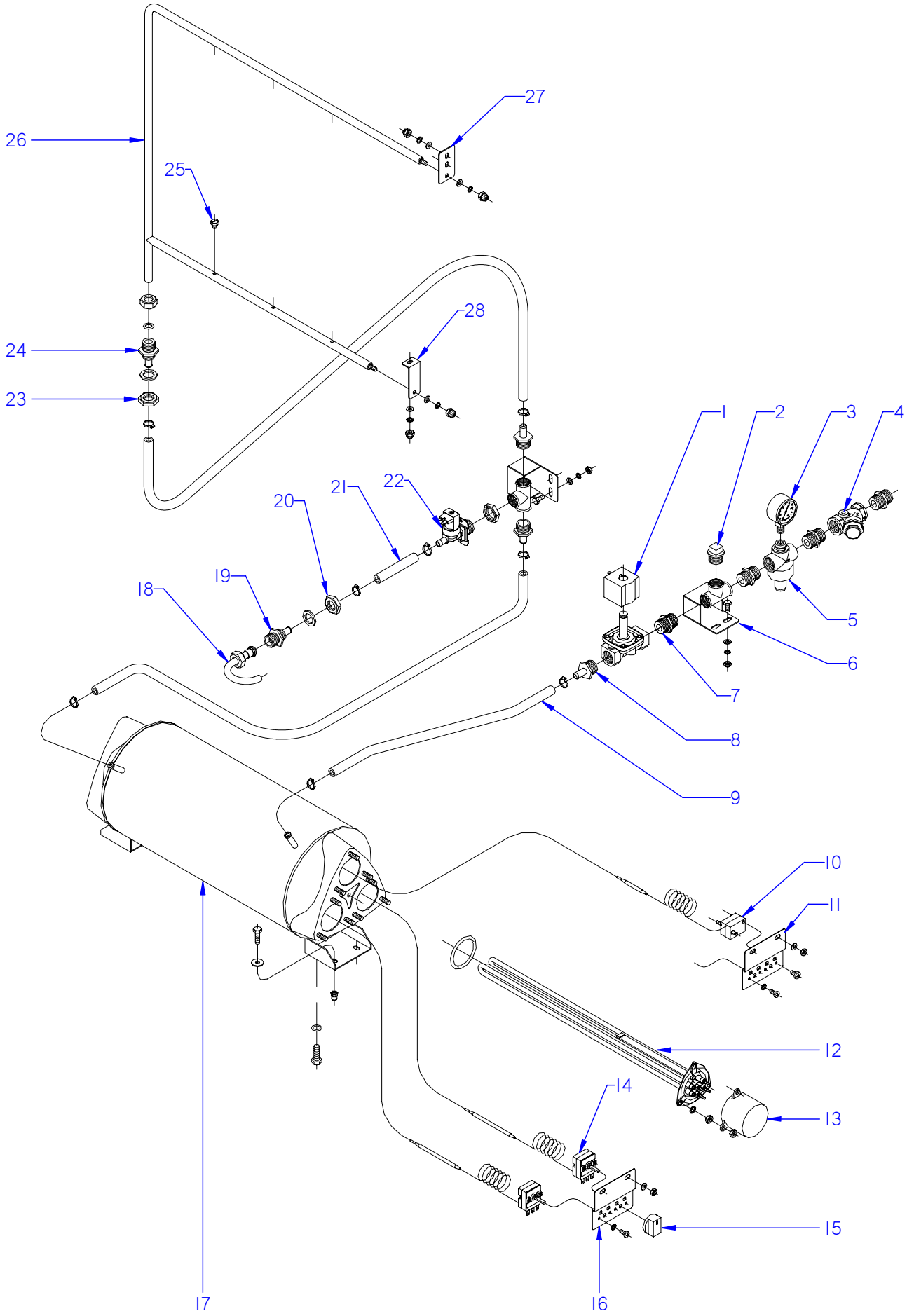


ITEM MARCADO EN COLOR = REPUESTO RECOMENDADO
COLOURED ITEM = RECOMMENDED SPARE PART

| N plano | Firma | Fecha | Aparato | | Lamina | |
|---|---|---|---|---|---|---|
| C-2149 | | 2008-11 | PARTE FUNCIONAL DE ACLARADO<br>LAVAVAJILLAS MODULARES FI | | 10 | Fagor Industrial S.Coop. FAGOR<br>Oñate |

| MOD. | LAVAVAJILLAS MODULARES<br>MODULAR DISHWASHERS | ZONA | PARTE FUNCIONAL DE ACLARADO<br>FUNCTIONAL PART OF RINSE | PLANO | C-2149 |
|---|---|---|---|---|---|

| ITEM | CODIGO | DENOMINACION | TEXTO | FI-280 | FI-370 | FI-460 | FI-550 | | | | NOTAS |
|---|---|---|---|---|---|---|---|---|---|---|---|
| 1 | Z102322000 | ELECTROV. 3/4"-240V. MONTADA | SOLENOID 3/4"-240V. MOUNTED | 1 | 1 | 1 | 1 | | | | |
| 2 | Z311103000 | TAPON 3/4" | LID 3/4" | 1 | 1 | 1 | 1 | | | | |
| 3 | Z102316000 | MANOMETRO | MANOMETER | 1 | 1 | 1 | 1 | | | | |
| 4 | Z102308000 | FILTRO 3/4 | FILTER 3/4" | 1 | 1 | 1 | 1 | | | | |
| 5 | Z102307000 | REDUCTOR PRESION | PRESSURE REDUCER | 1 | 1 | 1 | 1 | | | | |
| 6 | Z311101000 | TE COMPLETO | COMPLETE T | 2 | 2 | 2 | 2 | | | | |
| | Q012042000 | TORNILLO EXAGONAL M6X15 | HEXAGONAL BOLT M6x15 | 3 | 3 | 3 | 3 | | | | |
| | Q262040000 | ARANDELA GROW. A6 A.304 | WASHER GROW. A6 A.304 | 3 | 3 | 3 | 3 | | | | |
| | Q302022000 | ARANDELA 16X6X1.2 A.304 | WASHER 16X6X1.2 A.304 | 6 | 6 | 6 | 6 | | | | |
| | Q162040000 | TUERCA EXAGONAL M6 | HEXAGONAL NUT M6 | 1 | 1 | 1 | 1 | | | | |
| | Q221343000 | REMACHE EXAGONAL M6 | HEXAGONAL RIVET M6 | 2 | 2 | 2 | 2 | | | | |
| 7 | Z102301000 | MANGUITO 3/4" | HOSE 3/4" | 4 | 4 | 4 | 4 | | | | |
| 8 | Z102309000 | EMPALME 3-4 | CONNECTION 3-4' | 3 | 3 | 3 | 3 | | | | |
| 9 | 3676900000 | TUBO GOMA NEGRA Ø 17*10 | BLACK RUBBER PIPE 17*10 | 3 | 3 | 3 | 3 | | | | |
| 10 | Z276365000 | TERMOSTATO 150ºC | THERMOSTAT 150ºC | 1 | 1 | 1 | 1 | | | | |
| | Q152024000 | TORNILLO AVELLANADO M4X8 | COUNTERSUNK BOLT M4x8 | 2 | 2 | 2 | 2 | | | | |
| 11 | Z273037000 | SOPORTE TERMOST. A.C. | A.C. THERMOSTAT SUPPORT | 1 | 1 | 1 | 1 | | | | |
| | Q232040000 | ARANDELA A6 | WASHER A6 | 4 | 4 | 4 | 4 | | | | |
| | Q162040000 | TUERCA EXAGONAL M6 | HEXAGONAL NUT M6 | 4 | 4 | 4 | 4 | | | | |
| 12 | Z121741000 | RESISTENCIA 230 V. | RESISTOR 230 V. | 3 | 3 | _ | _ | | | | |
| 12 | Z129502000 | RESISTENCIA 220-240 V. | RESISTOR 220-240 V. | _ | _ | 3 | 3 | | | | |
| | Q307044000 | JUNTA TORICA Ø 67.18x56.52x5.3 | O-RING Ø 67.18x56.52x5.3 | 1 | 1 | 1 | 1 | | | | |
| 13 | Z101723000 | CAPERUZA RESISTENCIA | RESISTOR HOOD | 3 | 3 | 3 | 3 | | | | |
| | Q221305000 | TUERCA EXAG. AUTO M4 ZINCADA | HEXAG. SCREW AUTO M4 ZINC- | 18 | 18 | 18 | 18 | | | | |
| 14 | Z203014000 | TERMOSTATO CALDERIN | WASH DRUM THERMOSTAT | 2 | 2 | 2 | 2 | | | | ELIMINADO 30.11.2012 |
| 14 | 12040858 | TERMOSTATO CALDERIN | WASH DRUM THERMOSTAT | 2 | 2 | 2 | 2 | | | | INTRODUCIDO 30.11.2012 |
| | Q152024000 | TORNILLO AVELLANADO M4X8 | COUNTERSUNK BOLT M4x8 | 4 | 4 | 4 | 4 | | | | |
| 15 | Z203069000 | BOTON DE MANDO | CONTROL BUTTON | 1 | 1 | 1 | 1 | | | | |
| 16 | Z273037000 | SOPORTE TERMOST. A.C. | A.C. THERMOSTAT SUPPORT | 1 | 1 | 1 | 1 | | | | |
| | Q232040000 | ARANDELA A6 | WASHER A6 | 4 | 4 | 4 | 4 | | | | |
| | Q162040000 | TUERCA EXAGONAL M6 | HEXAGONAL NUT M6 | 4 | 4 | 4 | 4 | | | | |

| MOD. | LAVAVAJILLAS MODULARES<br>MODULAR DISHWASHERS | ZONA | PARTE FUNCIONAL DE ACLARADO<br>FUNCTIONAL PART OF RINSE | PLANO | C-2149 |
|---|---|---|---|---|---|

| ITEM | CODIGO | DENOMINACION | TEXTO | FI-280 | FI-370 | FI-460 | FI-550 | | | | NOTAS |
|---|---|---|---|---|---|---|---|---|---|---|---|
| 17 | Z311701000 | CALDERIN | BOILER | 1 | 1 | 1 | 1 | | | | |
| | Q262040000 | ARANDELA GROW. A6 A.304 | WASHER GROW. A6 A.304 | 13 | 13 | 13 | 13 | | | | |
| | Q162040000 | TUERCA EXAGONAL M6 | HEXAGONAL NUT M6 | 18 | 18 | 18 | 18 | | | | |
| 18 | Z331101000 | CONDUCTO LLENADO COMPLETO | COMPLETE FILLER PIPE | 1 | 1 | 1 | 1 | | | | |
| | Q223106000 | TUERCA UNION | UNION NUT | 1 | 1 | 1 | 1 | | | | |
| 19 | Z821910000 | PASAMUROS ACLARADO COMPL. | COMPL. RINSE BUSHING | 1 | 1 | 1 | 1 | | | | |
| | Q307032000 | JUNTA 32X21X3 | JOINT 32X21X3 | 1 | 1 | 1 | 1 | | | | |
| 20 | Q223023000 | TUERCA EXAGONAL LATON | HEXAGONAL BRASS NUT | 1 | 1 | 1 | 1 | | | | |
| 21 | 3676900000 | TUBO GOMA NEGRA Ø 17*10 | BLACK RUBBER PIPE 17*10 | 3 | 3 | 3 | 3 | | | | |
| 22 | Z701135000 | ELECTRO. SIMP.220V COD.255.208 | ELECTRO. SIMP.220V COD.255.2 | 1 | 1 | 1 | _ | | | | |
| 22 | P255001000 | ELECTROVALVULA DOBLE | DOUBLE SOLENOID VALVE | _ | _ | _ | 1 | | | | |
| | Z601156000 | REGULADOR 8L RO. 254.034 | REGULATOR 8L RED 254.034 | _ | _ | _ | 2 | | | | ELIMINADO 11.11.2013 |
| | 12096626 | REGULADOR 8 L AZUL | REGULATOR 8L BLUE | _ | _ | _ | 2 | | | | INTRODUCIDO 11.11.2013 |
| | Q221324000 | TUERCA 3/4 GAS | NUT 3/4 GAS | 1 | 1 | 1 | 1 | | | | |
| 23 | Q223023000 | TUERCA EXAGONAL 5-8 LATON | HEX NUT 5-8 BRASS | 1 | 1 | 1 | 1 | | | | |
| | Q307032000 | JUNTA 32X21X3 | JOINT 32X21X3 | 1 | 1 | 1 | 1 | | | | |
| 24 | Z271901000 | PASAMUROS ACLARADO | RINSE BUSHING | 1 | 1 | 1 | 1 | | | | |
| | Q307063000 | JUNTA TORICA 12.29X19.35X3.53 | O-RING 12.29X19.35X3.53 | 1 | 1 | 1 | 1 | | | | |
| | Q223108000 | TUERCA M.24X2.5 | NUT M.24X2.5 | 1 | 1 | 1 | 1 | | | | |
| 25 | Z211903000 | TOBERA ACLARADO | RINSE NOZZLE | 8 | 8 | 8 | 8 | | | | |
| 26 | Z351901000 | ARBOL DE ACLARADO | RINSE CAM | 1 | 1 | 1 | 1 | | | | |
| 27 | Z311917000 | SOPORTE SUPERIOR ACLARADO | UPPER RINSE SUPPORT | 1 | 1 | 1 | 1 | | | | |
| 28 | Z271912000 | AMARRE INFERIOR ACLARADO | LOWER RINSE FASTENING | 1 | 1 | 1 | 1 | | | | |
| | | | | | | | | | | | |
| | | | | | | | | | | | |
| | | | | | | | | | | | |
| | | | | | | | | | | | |
| | | | | | | | | | | | |
| | | | | | | | | | | | |
| | | | | | | | | | | | |
| | | | | | | | | | | | |

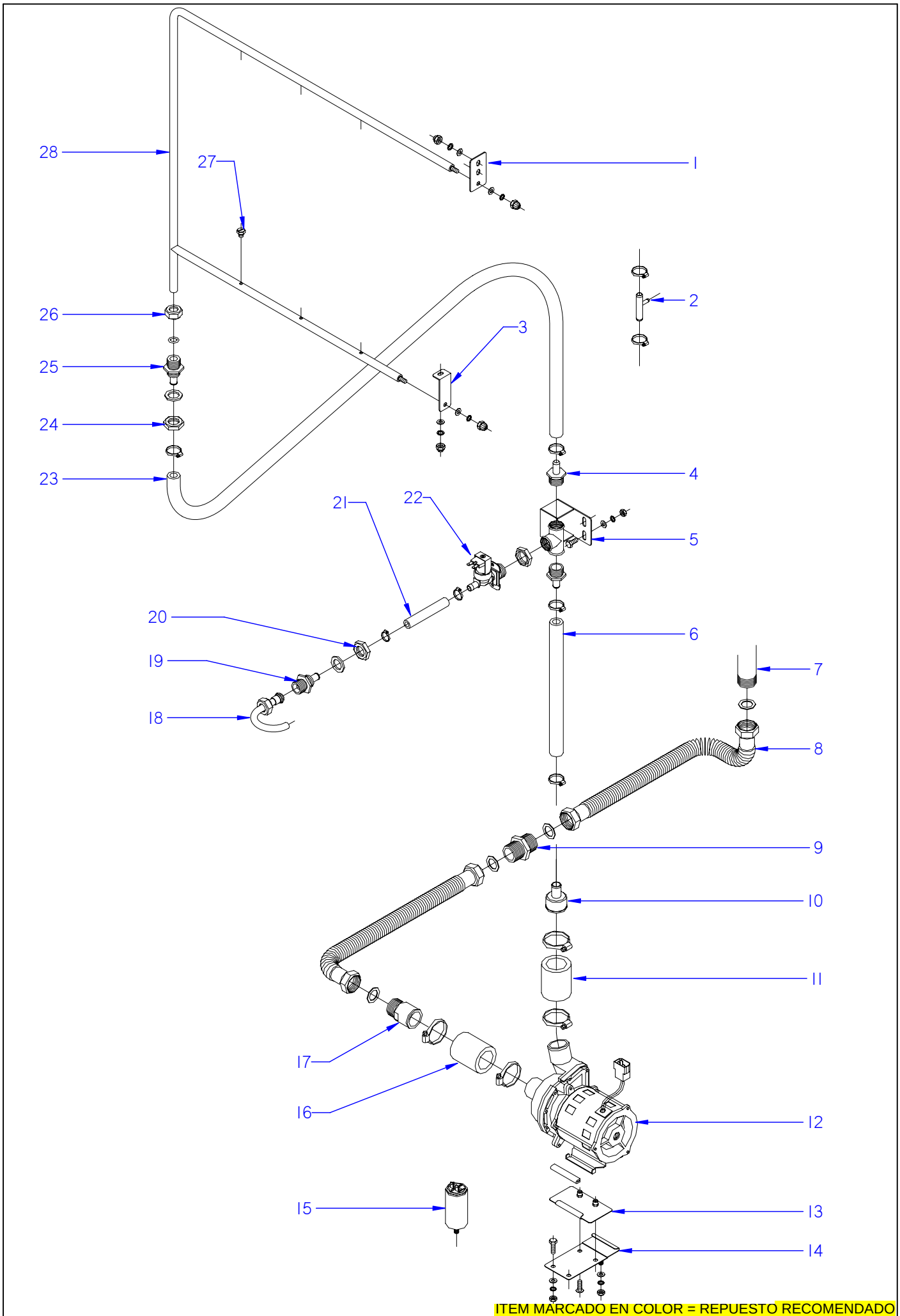


ITEM MARCADO EN COLOR = REPUESTO RECOMENDADO
COLOURED ITEM = RECOMMENDED SPARE PART

| N plano | Firma | Fecha | Aparato | | Lamina | |
|---|---|---|---|---|---|---|
| C-2150 | | 2008-11 | PARTE FUNCIONAL DE ACLARADO<br>LAVAVAJILLAS MODULARES ECO | | 11 | Fagor Industrial S.Coop. FAGOR<br>Oñate |

| MOD. | LAVAVAJILLAS MODULARES<br>MODULAR DISHWASHERS | ZONA | PARTE FUNCIONAL DE ACLARADO<br>FUNCTIONAL PART OF RINSE | PLANO | C-2150 |
|---|---|---|---|---|---|

| ITEM | CODIGO | DENOMINACION | TEXTO | ECO-280 | ECO-370 | ECO-460 | ECO-550 | | | | NOTAS |
|---|---|---|---|---|---|---|---|---|---|---|---|
| 1 | Z311917000 | SOPORTE SUPERIOR ACLARADO | UPPER RINSE SUPPORT | 1 | 1 | 1 | 1 | | | | |
| 2 | Z162308000 | TOMA PRESION | PRESSURE INTAKE | 1 | 1 | 1 | 1 | | | | |
| | Q881302000 | ABRAZADERA 12*20 | CLAMP 12*20 | 2 | 2 | 2 | 2 | | | | |
| 3 | Z271912000 | AMARRE INFERIOR ACLARADO | LOWER RINSE FASTENING | 1 | 1 | 1 | 1 | | | | |
| 4 | Z102309000 | EMPALME 3-4 | CONNECTION 3-4' | 2 | 2 | 2 | 2 | | | | |
| 5 | Z311101000 | TE COMPLETO | COMPLETE T | 1 | 1 | 1 | 1 | | | | |
| | Q012042000 | TORNILLO EXAGONAL M6X15 | HEXAGONAL BOLT M6x15 | 2 | 2 | 2 | 2 | | | | |
| | Q262040000 | ARANDELA GROW. A6 A.304 | WASHER GROW. A6 A.304 | 2 | 2 | 2 | 2 | | | | |
| | Q302022000 | ARANDELA 16X6X1.2 A.304 | WASHER 16X6X1.2 A.304 | 2 | 2 | 2 | 2 | | | | |
| | Q162040000 | TUERCA EXAGONAL M6 | HEXAGONAL NUT M6 | 2 | 2 | 2 | 2 | | | | |
| | Q221343000 | REMACHE EXAGONAL M6 | HEXAGONAL RIVET M6 | 2 | 2 | 2 | 2 | | | | |
| 6 | 3715300000 | TUBO GOMA 14x24 | RUBBER PIPE 14x24 | 1 | 1 | 1 | 1 | | | | |
| | Q881336000 | ABRAZADERA 16-27 | CLAMP 16-27 | 2 | 2 | 2 | 2 | | | | |
| 7 | | SALIDA DE GENERADOR | GENERATOR OUTPUT | 1 | 1 | 1 | 1 | | | | |
| 8 | Z951101000 | TUBO CORRUGADO | CORRUGATED PIPE | 2 | 2 | 2 | 2 | | | | |
| | Q306038000 | ARANDELA JUNATA Ø31X21X1.5 | WASHER SEAL Ø31X21X1.5 | 4 | 4 | 4 | 4 | | | | |
| 9 | Z162306000 | MANGUITO DOBLE ROSCA LATON 1 | DOUBLE HOSE BRASS THREAD | 1 | 1 | 1 | 1 | | | | |
| 10 | Z162312000 | REDUCCION | REDUCTION | 1 | 1 | 1 | 1 | | | | |
| 11 | Z162301000 | CONDUCTO ASPIRAC. IMPULSION | EXTRACTOR PIPE. IMPULSE | 1 | 1 | 1 | 1 | | | | |
| | Q881307000 | ABRAZADERA 40-60 | CLAMP 40-60 | 2 | 2 | 2 | 2 | | | | |
| 12 | Z401001000 | BOMBA LAVADO | WASH PUMP | 1 | 1 | 1 | 1 | | | | |
| | Z281112000 | PROTECTOR MOTOBOMBA | MOTOR PUMP GUARD | 1 | 1 | 1 | 1 | | | | |
| | 3701700000 | PERFIL GOMA U 9*4 | RUBBER PROFILE U 9*4 | 2 | 2 | 2 | 2 | | | | |
| 13 | Z162313000 | AMARRE MOTOBOMBA COMPLET. | COMPL. MOTOR PUMP FASTENI | 1 | 1 | 1 | 1 | | | | |
| | Q152004000 | TORNILLO APLASTADO M5x13 A304 | FLAT HEADED BOLT M5x13 A304 | 2 | 2 | 2 | 2 | | | | |
| 14 | Z162315000 | SOPORTE MOTOBOMBA COMPL. | COMPL. MOTOR PUMP SUPPOR | 1 | 1 | 1 | 1 | | | | |
| | Q012042000 | TORNILLO EXAGONAL M6X15 | HEXAGONAL BOLT M6x15 | 2 | 2 | 2 | 2 | | | | |
| | Q302022000 | ARANDELA 16X6X1.2 A.304 | WASHER 16X6X1.2 A.304 | 2 | 2 | 2 | 2 | | | | |
| | Q262040000 | ARANDELA GROW. A6 A.304 | WASHER GROW. A6 A.304 | 3 | 3 | 3 | 3 | | | | |
| | Q162040000 | TUERCA EXAGONAL M6 | HEXAGONAL NUT M6 | 2 | 2 | 2 | 2 | | | | |
| 15 | V817100000 | CONDENSADOR 6 M.F. | CONDENSER 6 M.F. | 1 | 1 | 1 | 1 | | | | |

| MOD. | LAVAVAJILLAS MODULARES<br>MODULAR DISHWASHERS | ZONA | PARTE FUNCIONAL DE ACLARADO<br>FUNCTIONAL PART OF RINSE | PLANO | C-2150 |
|---|---|---|---|---|---|

| ITEM | CODIGO | DENOMINACION | TEXTO | ECO-280 | ECO-370 | ECO-460 | ECO-550 | | | | NOTAS |
|---|---|---|---|---|---|---|---|---|---|---|---|
| 16 | Z162301000 | CONDUCTO ASPIRAC. IMPULSION | EXTRACTOR PIPE. IMPULSE | 1 | 1 | 1 | 1 | | | | |
| | Q881307000 | ABRAZADERA 40-60 | CLAMP 40-60 | 2 | 2 | 2 | 2 | | | | |
| 17 | Z701102000 | MANGUITO | HOSE | 1 | 1 | 1 | 1 | | | | |
| 18 | Z331101000 | CONDUCTO LLENADO COMPLETO | COMPLETE FILLER PIPE | 1 | 1 | 1 | 1 | | | | |
| | Q223106000 | TUERCA UNION | UNION NUT | 1 | 1 | 1 | 1 | | | | |
| 19 | Z821910000 | PASAMUROS ACLARADO COMPL. | COMPL. RINSE BUSHING | 1 | 1 | 1 | 1 | | | | |
| | Q307032000 | JUNTA 32X21X3 | JOINT 32X21X3 | 1 | 1 | 1 | 1 | | | | |
| 20 | Q223023000 | TUERCA EXAGONAL LATON | HEXAGONAL BRASS NUT | 1 | 1 | 1 | 1 | | | | |
| 21 | 3676900000 | TUBO GOMA NEGRA Ø 17*10 | BLACK RUBBER PIPE 17*10 | 1 | 1 | 1 | 1 | | | | |
| | Q881302000 | ABRAZADERA 12*20 | CLAMP 12*20 | 2 | 2 | 2 | 2 | | | | |
| 22 | Z701135000 | ELECTRO. SIMP.220V COD.255.208 | ELECTRO. SIMP.220V COD.255.2 | 1 | 1 | 1 | _ | | | | |
| 22 | P255001000 | ELECTROVALVULA DOBLE | DOUBLE SOLENOID VALVE | _ | _ | _ | 1 | | | | |
| | Z601156000 | REGULADOR 8L RO. 254.034 | REGULATOR 8L RED 254.034 | _ | _ | _ | 2 | | | | ELIMINADO 11.11.2013 |
| | 12096626 | REGULADOR 8 L AZUL | REGULATOR 8L BLUE | _ | _ | _ | 2 | | | | INTRODUCIDO 11.11.2013 |
| | Q221324000 | TUERCA 3/4 GAS | NUT 3/4 GAS | 1 | 1 | 1 | 1 | | | | |
| 23 | 3715300000 | TUBO GOMA 14x24 | RUBBER PIPE 14x24 | 1 | 1 | 1 | 1 | | | | |
| | Q881336000 | ABRAZADERA 16-27 | CLAMP 16-27 | 2 | 2 | 2 | 2 | | | | |
| 24 | Q223023000 | TUERCA EXAGONAL 5-8 LATON | HEX NUT 5-8 BRASS | 1 | 1 | 1 | 1 | | | | |
| | Q307032000 | JUNTA 32X21X3 | JOINT 32X21X3 | 1 | 1 | 1 | 1 | | | | |
| 25 | Z281901000 | PASAMUROS ACLARADO | RINSE BUSHING | 1 | 1 | 1 | 1 | | | | |
| | Q307063000 | JUNTA TORICA 12.29X19.35X3.53 | O-RING 12.29X19.35X3.53 | 1 | 1 | 1 | 1 | | | | |
| 26 | Q223108000 | TUERCA M.24X2.5 | NUT M.24X2.5 | 1 | 1 | 1 | 1 | | | | |
| 27 | Z211903000 | TOBERA ACLARADO | RINSE NOZZLE | 8 | 8 | 8 | 8 | | | | |
| 28 | Z351901000 | ARBOL DE ACLARADO | RINSE CAM | 1 | 1 | 1 | 1 | | | | |
| | | | | | | | | | | | |
| | | | | | | | | | | | |
| | | | | | | | | | | | |
| | | | | | | | | | | | |
| | | | | | | | | | | | |
| | | | | | | | | | | | |
| | | | | | | | | | | | |

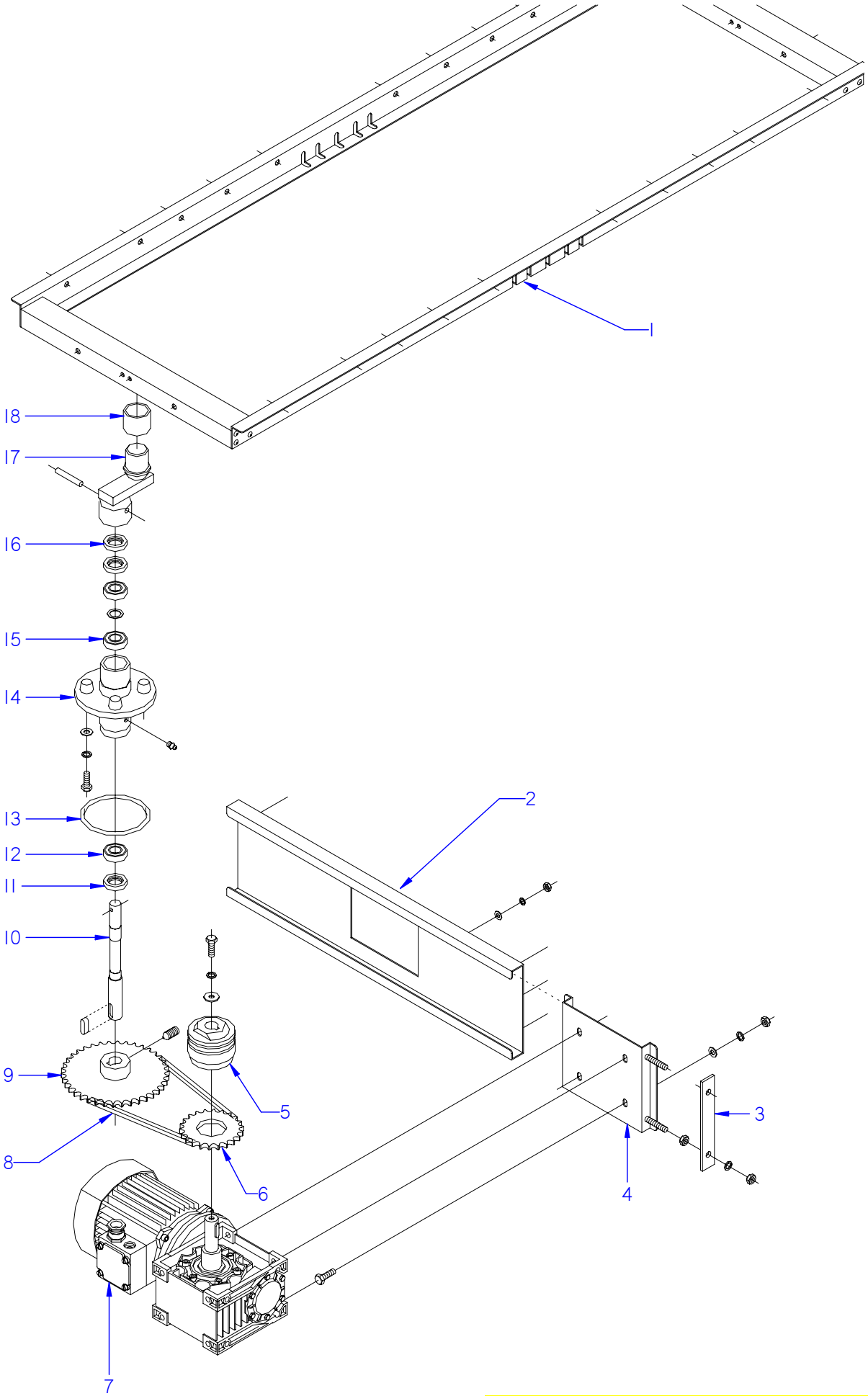


ITEM MARCADO EN COLOR = REPUESTO RECOMENDADO
COLOURED ITEM = RECOMMENDED SPARE PART

| N plano | Firma | Fecha | Aparato | | Lamina | |
|---|---|---|---|---|---|---|
| C-2151 | | 2008-11 | SISTEMA DE ARRASTRE<br>LAVAVAJILLAS MODULARES | | 12 | Fagor Industrial S.Coop.<br>Oñate |

| MOD. | LAVAVAJILLAS MODULARES<br>MODULAR DISHWASHERS | ZONA | SISTEMA DE ARRASTRE / SWEEP ZONE | PLANO | C-2151 |
|---|---|---|---|---|---|

| ITEM | CODIGO | DENOMINACION | TEXTO | FI-280<br>ECO-280 | FI-370<br>ECO-370 | FI-460<br>ECO-460 | FI-550<br>ECO-550 | | | | NOTAS |
|---|---|---|---|---|---|---|---|---|---|---|---|
| 1 | Z315021000 | SOPORTE UÑAS DE LAVADO | WASH CLAW SUPPORT | 1 | 1 | 1 | 1 | | | | |
| 2 | Z315004000 | GUIA MOTORREDUCTOR COMPLET | COMPLETE GEARED MOTOR GU | 1 | 1 | 1 | 1 | | | | |
| | Q262040000 | ARANDELA GROW. A6 A.304 | WASHER GROW. A6 A.304 | 9 | 9 | 9 | 9 | | | | |
| | Q162040000 | TUERCA EXAGONAL M6 | HEXAGONAL NUT M6 | 9 | 9 | 9 | 9 | | | | |
| | Q302022000 | ARANDELA 16X6X1.2 A.304 | WASHER 16X6X1.2 A.304 | 9 | 9 | 9 | 9 | | | | |
| 3 | Z275006000 | TENSOR | TENSIONER | 1 | 1 | 1 | 1 | | | | |
| | Q162050000 | TUERCA EXAGONAL M8x1 INOX. | HEXAGONAL NUT M8x1 INOX. | 2 | 2 | 2 | 2 | | | | |
| | Q262050000 | ARANDELA GROW. A8 A.304 | WASHER GROW. A8 A.304 | 2 | 2 | 2 | 2 | | | | |
| 4 | Z315002000 | SOPORTE MOTORREDUCTOR | GEARED MOTOR SUPPORT | 1 | 1 | 1 | 1 | | | | ELIMINADO 04.12.13 |
| 4 | 12103552 | SOPORTE MOTORREDUCTOR COM | COM. GEARED MOTOR SUPPOR | 1 | 1 | 1 | 1 | | | | INTRODUCIDO 04.12.13 |
| | Q012053000 | TORNILLO EXAGONAL M8X20 | HEXAGONAL BOLT M8x20 | 4 | 4 | 4 | 4 | | | | |
| | Q262050000 | ARANDELA GROW. A8 A.304 | WASHER GROW. A8 A.304 | 4 | 4 | 4 | 4 | | | | |
| | Q162050000 | TUERCA EXAGONAL M8x1 INOX. | HEXAGONAL NUT M8x1 INOX. | 4 | 4 | 4 | 4 | | | | |
| 5 | Z105008000 | LIMITADOR DE PAR LS 70 | TORQUE LIMITER LS 70 | 1 | 1 | 1 | 1 | | | | |
| 6 | Z105009000 | CORONA | CROWN | 1 | 1 | 1 | 1 | | | | |
| 6 | Z104104000 | CORONA 60 Hz, | CROWN 60 Hz, | 1 | 1 | 1 | 1 | | | | |
| 7 | Z315001000 | MOTORREDUCTOR SIN-FIN MONTA | WORM GEAR MOTOR MOUNTED | 1 | 1 | 1 | 1 | | | | |
| 8 | Z275008000 | CADENA IRIS 12.7X7.95X730 | IRIS CHAIN 12.7x7.95x730 | 1 | 1 | 1 | 1 | | | | |
| | Z105012000 | ENGANCHE CADENA SIMPLE | SIMPLE CHAIN FASTENER | 1 | 1 | 1 | 1 | | | | |
| 9 | Z275007000 | PIÑON Z=26 | PINION Z=26 | 1 | _ | _ | _ | | | | |
| 9 | Z335021000 | PIÑON Z=19 | PINION Z=19 | _ | 1 | _ | _ | | | | |
| 9 | Z355021000 | PIÑON Z=15 | PINION Z=15 | _ | _ | 1 | _ | | | | |
| 9 | Z375001000 | PIÑON Z=13 | PINION Z=13 | _ | _ | _ | 1 | | | | |
| | Z105051000 | VARILLA ROSCADA M. 8X16 | THREADED ROD M-8x16 | 1 | 1 | 1 | 1 | | | | |
| 10 | Z315011000 | EJE | SHAFT | 1 | 1 | 1 | 1 | | | | |
| | Z105014000 | CHAVETA 25X6X6 | COTTER PIN 25X6X6 | 1 | 1 | 1 | 1 | | | | |
| 11 | Z105016000 | RETEN RADIAL 20x35x7 | RADIAL SEAL 20x35x7 | 1 | 1 | 1 | 1 | | | | |
| 12 | Z105017000 | RODAMIENTO 6003-2RS | BEARING 6003 - 2RS | 1 | 1 | 1 | 1 | | | | |
| 13 | Q307045000 | JUNTA TORICA 105.28x94.62 | "O" RING 105.28x94.62 | 1 | 1 | 1 | 1 | | | | |
| | | | | | | | | | | | |
| | | | | | | | | | | | |

| MOD. | LAVAVAJILLAS MODULARES<br>MODULAR DISHWASHERS | ZONA | SISTEMA DE ARRASTRE / SWEEP ZONE | PLANO | C-2151 |
|---|---|---|---|---|---|

| ITEM | CODIGO | DENOMINACION | TEXTO | FI-280<br>ECO-280 | FI-370<br>ECO-370 | FI-460<br>ECO-460 | FI-550<br>ECO-550 | | | | NOTAS |
|---|---|---|---|---|---|---|---|---|---|---|---|
| 14 | Z105021000 | SOPORTE RODAMIENTOS | BEARING SUPPORT | 1 | 1 | 1 | 1 | | | | |
| | Q012053000 | TORNILLO EXAGONAL M8X20 | HEXAGONAL BOLT M8x20 | 4 | 4 | 4 | 4 | | | | |
| | Q262050000 | ARANDELA GROW. A8 A.304 | WASHER GROW. A8 A.304 | 4 | 4 | 4 | 4 | | | | |
| | Q262050000 | ARANDELA GROW. A8 A.304 | WASHER GROW. A8 A.304 | 4 | 4 | 4 | 4 | | | | |
| 15 | Z105017000 | RODAMIENTO 6003-2RS | BEARING 6003 - 2RS | 2 | 2 | 2 | 2 | | | | |
| | Z105019000 | ARANDELA SEPARACION | SPACER WASHER | 1 | 1 | 1 | 1 | | | | |
| 16 | Z105016000 | RETEN RADIAL 20x35x7 | RADIAL SEAL 20x35x7 | 2 | 2 | 2 | 2 | | | | |
| 17 | Z275025000 | BULON ARRASTRE | DRIVE BOLT | 1 | 1 | 1 | 1 | | | | |
| | Q362000000 | PASADOR INOX.6,3x50 | PIN INOX.6.3x50 | 1 | 1 | 1 | 1 | | | | |
| 18 | Z105027000 | CASQUILLO | BUSHING | 1 | 1 | 1 | 1 | | | | |

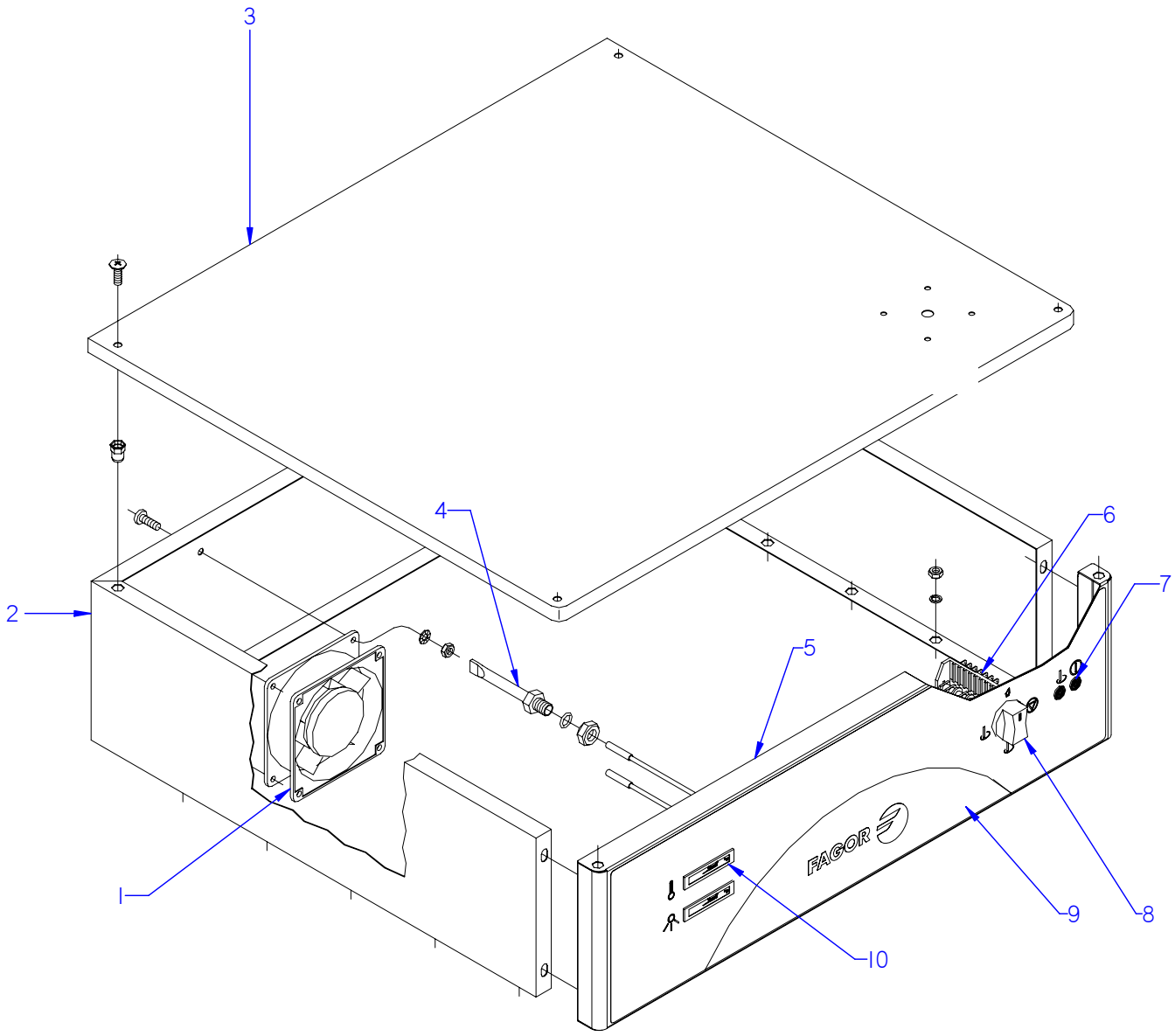


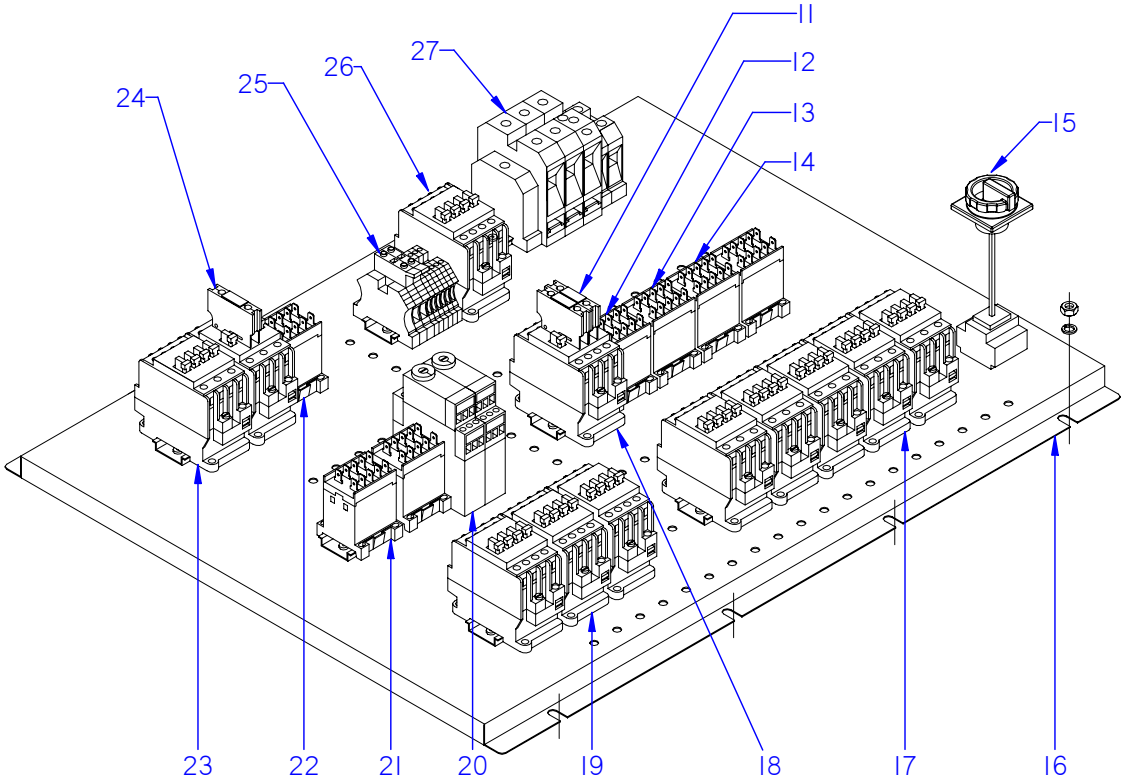


ITEM MARCADO EN COLOR = REPUESTO RECOMENDADO
COLOURED ITEM = RECOMMENDED SPARE PART

| N plano | Firma | Fecha | Aparato | Lamina | |
|---|---|---|---|---|---|
| C-2152 | | 2008-11 | CONJUNTO FUNCIONAL ELECTRICO<br>LAVAVAJILLAS MODULARES | 13 | Fagor Industrial S.Coop. FAGOR<br>Onate |

| MOD. | LAVAVAJILLAS MODULARES<br>MODULAR DISHWASHERS | ZONA | CONJUNTO FUNCIONAL ELECTRICO<br>FUNCTIONAL ELECTRIC UNIT | PLANO | C-2152 |
|---|---|---|---|---|---|

| ITEM | CODIGO | DENOMINACION | TEXTO | FI-280<br>ECO-280 | FI-370<br>ECO-370 | FI-460 I<br>ECO-460 I | FI-550 D<br>ECO-550 D | | | | NOTAS |
|---|---|---|---|---|---|---|---|---|---|---|---|
| 1 | Z103066000 | VENTILADOR 230V.50-60HZ | FAN 230V.50-60HZ | 1 | 1 | 1 | 1 | | | | |
| | Q031322000 | TORNILLO ALOMADO M4X15 | CURVED SCREW M4X15 | 4 | 4 | 4 | 4 | | | | |
| | Q242020000 | ARANDELA GROW. A4 A.304 | WASHER GROW. A4 A.304 | 4 | 4 | 4 | 4 | | | | |
| | Q162020000 | TUERCA EXAGONAL M4 | HEXAGONAL NUT M4 | 4 | 4 | 4 | 4 | | | | |
| 2 | Z313043000 | CUBIERTA CUADRO ELECTRICO | ELECTRIC PANEL COVER | 1 | 1 | 1 | 1 | | | | ELIMINADO 01.12.09 |
| 2 | Z313089000 | CUBIERTA CUADRO ELECTRICO | ELECTRIC PANEL COVER | 1 | 1 | 1 | 1 | | | | ELIMINADO 25.10.13 |
| 2 | 12096569 | CUBIERTA CUADRO ELECT. COMP. | COMP. ELECTR. PANEL COVER | 1 | 1 | 1 | 1 | | | | INTRODUCIDO 25.10.13 |
| 3 | Z313048000 | TAPA CUADRO ELECTRICO | ELECTRIC PANEL COVER | 1 | 1 | 1 | 1 | | | | ELIMINADO 01.12.09 |
| 3 | Z313093000 | TAPA CUADRO ELECTRICO | ELECTRIC PANEL COVER | 1 | 1 | 1 | 1 | | | | INTRODUCIDO 01.12.09 |
| | Q152017000 | TORNILLO AMARRE M6X13 A304 | FASTENING BOLT M6X13 A304 | 4 | 4 | 4 | 4 | | | | |
| 4 | Z263002000 | VAINA INDICADOR COMPLETA | COMPLETE INDICATOR SHELL | 1 | 1 | 1 | 1 | | | | |
| | Q307048000 | JUNTA TORICA 9,128x16,18x3,53 | O-RING 9.128x16.18x3.53 | 1 | 1 | 1 | 1 | | | | |
| | Q162070000 | TUERCA EXAGONAL M12 | HEXAGONAL NUT M12 | 1 | 1 | 1 | 1 | | | | |
| 5 | Z313085000 | FRENTE CUADRO ELECTRICO | ELECTRIC PANEL FRONT | 1 | 1 | 1 | 1 | | | | ELIMINADO 01.12.09 |
| 5 | Z273075000 | FRENTE CUADRO ELECTRICO | ELECTRIC PANEL FRONT | 1 | 1 | 1 | 1 | | | | INTRODUCIDO 01.12.09 |
| 6 | Z273005000 | COMMUTADOR DE FUNCIONES | FUNCTIONS SWITCH | 1 | 1 | 1 | 1 | | | | |
| | Z602906000 | CASQUILLO | BUSHING | 2 | 2 | 2 | 2 | | | | |
| 7 | Z313080000 | PILOTO AMBAR Ø18 | AMBAR PILOT LIGHT Ø18 | 2 | 2 | 2 | 2 | | | | ELIMINADO 01.02.2013 |
| 7 | 12024254 | PILOTO AMBAR 41227000A4 | AMBAR PILOT 41227000A4 | 2 | 2 | 2 | 2 | | | | INTRODUCIDO 01.02.2013 |
| 8 | Z203069000 | BOTON DE MANDO | CONTROL BUTTON | 1 | 1 | 1 | 1 | | | | |
| 9 | Z313078000 | EMBELLECEDOR ADHESIVO FI- | ADHESIVE TRIM FI- | 1 | 1 | 1 | 1 | | | | MOD.FI ELIMINA. 01.12.09 |
| 9 | Z313079000 | EMBELLECEDOR ADHESIVO FI- | ADHESIVE TRIM FI- | 1 | 1 | 1 | 1 | | | | MOD.FI INTROD. 01.12.09 |
| 9 | Z323021000 | EMBELLECEDOR ADHESIVO ECO | ADHESIVE TRIM ECO | 1 | 1 | 1 | 1 | | | | M.ECO ELIMINA. 01.12.09 |
| 9 | Z323022000 | EMBELLECEDOR ADHESIVO ECO | ADHESIVE TRIM ECO | 1 | 1 | 1 | 1 | | | | M.ECO INTROD. 01.12.09 |
| 10 | Z203072000 | INDICADOR ANALOGICO RECT. | RECT. ANALOGUE DISPLAY | 2 | 2 | 2 | 2 | | | | ELIMINADO 01.12.09 |
| 10 | Z513023000 | INDICADOR ANALOGICO | RECT. ANALOGUE DISPLAY | 2 | 2 | 2 | 2 | | | | MOD.FI INTROD. 01.12.09 |
| 10 | Z513023000 | INDICADOR ANALOGICO | RECT. ANALOGUE DISPLAY | 1 | 1 | 1 | 1 | | | | M.ECO INTROD. 01.12.09 |
| 11 | Z953046000 | CONTACTO AUXIL. 3RH1911-2FA11 | AUX. CONTACT 3RH1911-2FA11 | 1 | 1 | 1 | 1 | | | | |
| 12 | Z213007000 | CONTACTOR 230 V. 50-60 HZ | CONTACTOR 230 V. 50-60 HZ | 1 | 1 | 1 | 1 | | | | |
| 13 | Z683087000 | CONTACTOR 3TF20 01-3AL2 230 | CONTACTOR 3TF20 01-3AL2 230 | 1 | 1 | 1 | 1 | | | | |
| 14 | Z213007000 | CONTACTOR 230 V. 50-60 HZ | CONTACTOR 230 V. 50-60 HZ | 2 | 2 | 2 | 2 | | | | |

| MOD. | LAVAVAJILLAS MODULARES<br>MODULAR DISHWASHERS | ZONA | CONJUNTO FUNCIONAL ELECTRICO<br>FUNCTIONAL ELECTRIC UNIT | PLANO | C-2152 |
|---|---|---|---|---|---|

| ITEM | CODIGO | DENOMINACION | TEXTO | FI-280<br>ECO-280 | FI-370<br>ECO-370 | FI-460 I<br>ECO-460 I | FI-550 D<br>ECO-550 D | | | | NOTAS |
|---|---|---|---|---|---|---|---|---|---|---|---|
| 15 | P663014000 | SECCIONADOR 3P.125A SIEMENS | SECTIONATOR 3P.125A SIEMENS | 1 | 1 | 1 | _ | | | SOLO FI | INTRODUCIDO 04.01.10 |
| 15 | Z513081000 | SECCIONADOR 4P. 160A SIEMENS | SECTIONATOR 4P.160A SIEMENS | _ | _ | _ | 1 | | | SOLO FI | INTRODUCIDO 04.01.10 |
| 15 | P683039000 | SECCIONADOR 4P.63A SIEMENS | SECTIONATOR 4P.63A SIEMENS | 1 | 1 | _ | _ | | | SOLO ECO | INTRODUCID. 04.01.10 |
| 15 | P663014000 | SECCIONADOR 3P.125A SIEMENS | SECTIONATOR 3P.125A SIEMENS | _ | _ | 1 | _ | | | SOLO ECO | INTRODUCID. 04.01.10 |
| S/Nº | P663015000 | BLOQUE 4º P. SECCIONAD. 125A S. | SECTION. 125A 4º POLO SIEMEN | 1 | 1 | 1 | _ | | | SOLO FI | INTRODUCID. 04.01.10 |
| S/Nº | P663015000 | BLOQUE 4º P. SECCIONAD. 125A S. | SECTION. 125A 4º POLO SIEMEN | _ | _ | 1 | 1 | | | SOLO ECO | INTRODUCID. 04.01.10 |
| 16 | Z313042000 | SOPORTE CUADRO ELECTRICO | ELECTRIC PANEL SUPPORT | 1 | 1 | 1 | 1 | | | | ELIMINADO 01.12.09 |
| 16 | Z313088000 | SOPORTE CUADRO ELECTRICO | ELECTRIC PANEL SUPPORT | 1 | 1 | 1 | 1 | | | | INTRODUCIDO 01.12.09 |
| 17 | X183011000 | CONTACTOR 3RT1024-1AN20 230 | CONTACTOR 3RT1024-1AN20 23 | 5 | 5 | 5 | 5 | | | | |
| 18 | Z743009000 | CONT.SIRIUS 3RT10 16-2AP02 | SIRIUS CONT. 3RT10 16-2AP02 | 1 | 1 | 1 | 1 | | | | |
| 19 | Z203050000 | CONTACTOR SIRIUS 3R 230V50-60 | CONTACTOR SIRIUS 3R 230V50- | 3 | 3 | 3 | 3 | | | | |
| 20 | Z123022000 | TEMPORI. SYRELEC TRU SECADO | TIMER . SYRELEC TRU DRYER | 2 | 2 | 2 | 2 | | | | |
| 21 | Z213007000 | CONTACTOR 230 V. 50-60 HZ | CONTACTOR 230 V. 50-60 HZ | _ | 1 | 1 | 2 | | | | |
| 22 | Z213007000 | CONTACTOR 230 V. 50-60 HZ | CONTACTOR 230 V. 50-60 HZ | 1 | 1 | 1 | 1 | | | | |
| 23 | X183011000 | CONTACTOR 3RT1024-1AN20 230 | CONTACTOR 3RT1024-1AN20 23 | 1 | 1 | 2 | 2 | | | | |
| 24 | Z103070000 | BLOQ. AUX. 3RH1921-1CA10 | AUX. BLOCK 3RH1921-1CA10 | 1 | 1 | 1 | 1 | | | | |
| 25 | Z103029000 | BORNE PAS WDU 2.5 10200-0 | TERMINAL PAS WDU 2.5 10200-0 | 6 | 6 | 6 | 6 | | | | |
| | P453026000 | BORNE TIER 10 WPE-10103.O | TERMINAL TIER 10 WPE-10103.O | 1 | 1 | 1 | 1 | | | | |
| | R073005000 | BORNAS PORTA FUSIBLES | FUSE HOLDER TERMINALS | 2 | 2 | 2 | 2 | | | | |
| | R723015000 | FUSIBLE CRISTAL 10A. | GLASS FUSE 10A. | 2 | 2 | 2 | 2 | | | | |
| | Z263303000 | TOPE FINAL | END STOP | 1 | 1 | 1 | 1 | | | | |
| 26 | Z203050000 | CONTACTOR SIRIUS 3R 230V50-60 | CONTACTOR SIRIUS 3R 230V50- | 1 | 1 | 1 | 1 | | | | |
| 27 | Z103035000 | BORNA TIERRA 35MM | EARTH TERMINAL 35MM | 1 | 1 | 1 | 1 | | | | |
| | R673010000 | BORNA PASO AZUL 35MM | THROUGH TERMINAL BLUE 35MI | 1 | 1 | 1 | 1 | | | | |
| | Z683096000 | TOPE FINAL WEW35 10590.0 | END STOP WEW35 10590.0 | 1 | 1 | 1 | 1 | | | | |
| | R143011000 | BORNA WDU-70/N REF.951219 | TERMINAL WDU-70/N REF.95121 | 3 | 3 | 3 | 3 | | | SOLO FI | ELIMINADO 01.12.09 |
| | R263003000 | BORNA PASO 35MM | THROUGH TERMINAL 35MM | 3 | 3 | 3 | 3 | | | SOLO ECO | ELIMINADO 01.12.09 |
| | Z513083000 | BORNE DISTRIBUIDOR 70 MM2 | DISTRIBUI. 70 MM2 TERMINAL | 1 | 1 | 1 | 1 | | | SOLO FI | INTRODUCIDU 04.01.10 |
| | Z513083000 | BORNE DISTRIBUIDOR 70 MM2 | DISTRIBUI. 70 MM2 TERMINAL | _ | _ | 1 | 1 | | | SOLO ECO | INTRODUCID. 01.12.09 |
| | Z273083000 | BORNE DISTRIBUIDOR 35 MM2 | DISTRIBUI. 35 MM2 TERMINAL | 3 | 3 | _ | _ | | | SOLO ECO | INTRODUCID. 01.12.09 |
| | | | | | | | | | | | |

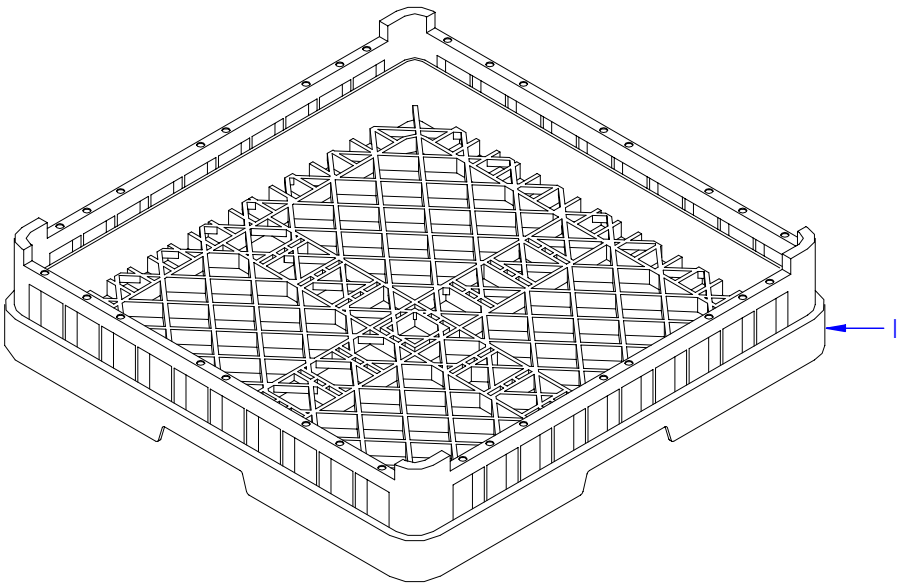


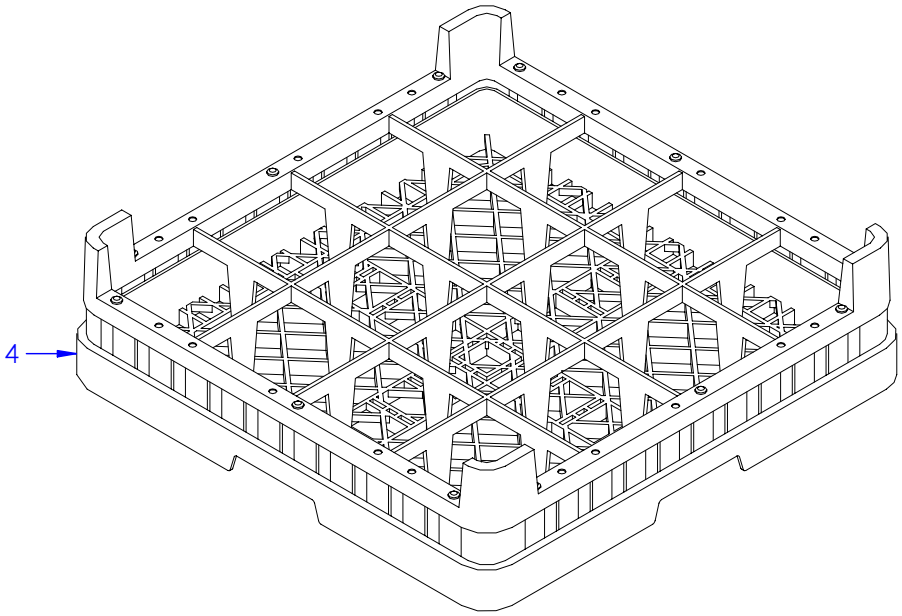


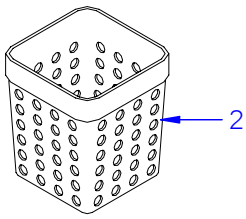


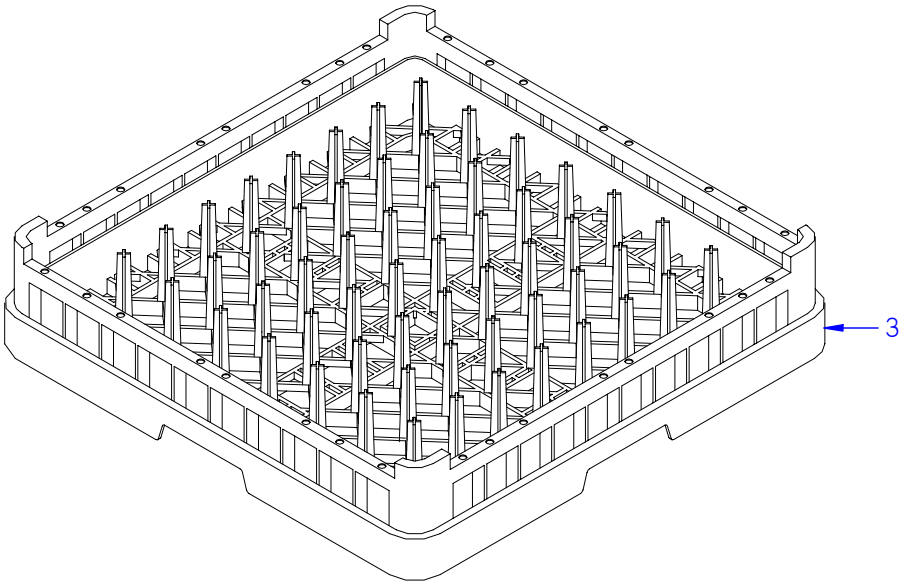


ITEM MARCADO EN COLOR = REPUESTO RECOMENDADO
COLOURED ITEM = RECOMMENDED SPARE PART

| N plano | Firma | Fecha | Aparato | Lamina | |
|---|---|---|---|---|---|
| C-2153 | | 2008-11 | CESTILLOS<br>LAVAVAJILLAS MODULARES | 14 | Fagor Industrial S.Coop.<br>Oñate |

| MOD. | LAVAVAJILLAS MODULARES<br>MODULAR DISHWASHERS | ZONA | CESTILLOS / BASKETS | PLANO | C-2153 |
|---|---|---|---|---|---|

| ITEM | CODIGO | DENOMINACION | TEXTO | FI-280<br>ECO-280 | FI-370<br>ECO-370 | FI-460<br>ECO-460 | FI-550<br>ECO-550 | | | | | |
|---|---|---|---|---|---|---|---|---|---|---|---|---|
| 1 | Z655301000 | CESTILLO BASE CT-10 | BASE BASKET CT-10 | 2 | 2 | 2 | 2 | | | | | |
| 2 | Z655314000 | CESTILLO CUBIERTOS | CUTLERY BASKET | 16 | 16 | 16 | 16 | | | | | ELIMINA. 01.12.09 |
| 2 | Z275315000 | CESTILLO CUBIERTOS | CUTLERY BASKET | 1 | 1 | 1 | 1 | | | | | INTROD. 01.12.09 |
| 3 | Z655302000 | CESTILLO PLATOS CP-16-18 | PLATE BASKET CP-16-18 | 2 | 2 | 2 | 2 | | | | | |
| 4 | Z655316000 | CESTILLO CV-16-105 | BASKET CV-16-105 | 1 | 1 | 1 | 1 | | | | | |

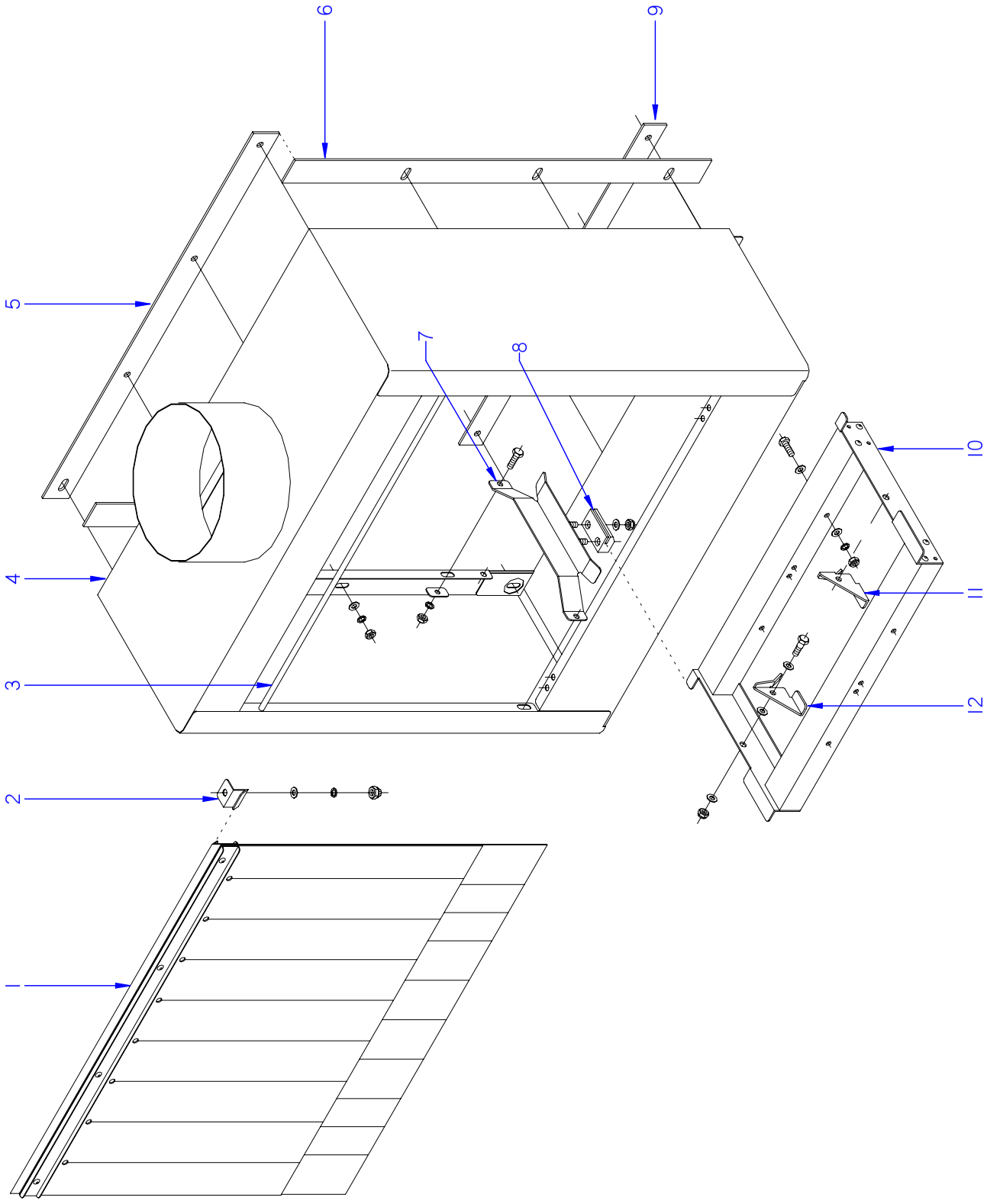


ITEM MARCADO EN COLOR = REPUESTO RECOMENDADO
COLOURED ITEM = RECOMMENDED SPARE PART

| N plano | Firma | Fecha | Aparato | Lamina | |
|---|---|---|---|---|---|
| C-2154 | | 2008-11 | TUNEL ASPIRADOR DE VAHOS<br>LAVAVAJILLAS MODULARES | 15 | Fagor Industrial S.Coop.<br>Oñate |

| MOD. | LAVAVAJILLAS MODULARES<br>MODULAR DISHWASHERS | ZONA | TUNEL ASPIRADOR DE VAHOS<br>STEAM INTAKE TUNNEL | PLANO | C-2154 |
|---|---|---|---|---|---|

| ITEM | CODIGO | DENOMINACION | TEXTO | FI-280<br>ECO-280 | FI-370<br>ECO-370 | FI-460<br>ECO-460 | FI-550<br>ECO-550 | | | | NOTAS |
|---|---|---|---|---|---|---|---|---|---|---|---|
| 1 | Z276419000 | CORTINA EXTERIOR COMPLETA | COMPLETE EXTERIOR CURTAIN | 1 | 1 | 1 | 1 | | | | |
| | Q302022000 | ARANDELA 16X6X1.2 A.304 | WASHER 16X6X1.2 A.304 | 12 | 12 | 12 | 12 | | | | |
| | Q262040000 | ARANDELA GROW. A6 A304 | WASHER GROW. A6 A304 | 12 | 12 | 12 | 12 | | | | |
| | Q162040000 | TUERCA EXAGONAL M6 | HEXAGONAL NUT M6 | 12 | 12 | 12 | 12 | | | | |
| 2 | Z270326000 | SUJECION CORTINA | CURTAIN FASTENING | 2 | 2 | 2 | 2 | | | | |
| | Q262040000 | ARANDELA GROW. A6 A.304 | WASHER GROW. A6 A.304 | 2 | 2 | 2 | 2 | | | | |
| | Q232040000 | ARANDELA A6 | WASHER A6 | 2 | 2 | 2 | 2 | | | | |
| | Q212040000 | TUERCA SOMBRERETE M6 | COWL NUT M6 | 2 | 2 | 2 | 2 | | | | |
| 3 | Z276520000 | PROTECTOR SUPER. SOLDADO | UPPER PROTECTION WELDED | 1 | 1 | 1 | 1 | | | | |
| | Q262030000 | ARANDELA GROW. A5 A.304 | WASHER GROW. A5 A.304 | 2 | 2 | 2 | 2 | | | | |
| | Q232030000 | ARANDELA A5 | WASHER A5 | 2 | 2 | 2 | 2 | | | | |
| | Q012032000 | TORNILLO EXAGONAL M5X15 | HEXAGONAL BOLT M5x15 | 2 | 2 | 2 | 2 | | | | |
| 4 | Z276501000 | TUNEL ASPIRADOR VAHOS COMP. | COMP. STEAM EXTRACTOR TUN | 1 | 1 | 1 | 1 | | | | |
| 5 | Z276206000 | JUNTA SUPERIOR COMPACTO | COMPACT UPPER JOINT | 1 | 1 | 1 | 1 | | | | |
| 6 | Z276208000 | JUNTA LATERAL COMPACTO | COMPACT SIDE JOINT | 2 | 2 | 2 | 2 | | | | |
| 7 | Z276215000 | GUIA ENTRADA-SALIDA | INPUT-OUTPUT GUIDE | 2 | 2 | 2 | 2 | | | | |
| | Q012042000 | TORNILLO EXAGONAL M6X15 A304 | HEXAGONAL BOLT M6x15 A304 | 4 | 4 | 4 | 4 | | | | |
| | Q262040000 | ARANDELA GROW. A6 A.304 | WASHER GROW. A6 A.304 | 4 | 4 | 4 | 4 | | | | |
| | Z310341000 | ARANDELA RECTANGULAR | RECTANGULAR WASHER | 4 | 4 | 4 | 4 | | | | |
| | Q162040000 | TUERCA EXAGONAL M6 | HEXAGONAL NUT M6 | 4 | 4 | 4 | 4 | | | | |
| 8 | Z275075000 | DESLIZAMIENTO GUIAS | GUIDE SLIDE | 2 | 2 | 2 | 2 | | | | |
| | Q232040000 | ARANDELA A6 | WASHER A6 | 4 | 4 | 4 | 4 | | | | |
| | Q222012000 | TUERCA AUTOBLOCANTE M6 | SELF-LOCKING NUT M6 | 4 | 4 | 4 | 4 | | | | |
| 9 | Z276207000 | JUNTA INFERIOR COMPACTO | COMPACT LOWER GUIDE | 1 | 1 | 1 | 1 | | | | |
| 10 | Z276221000 | SOPORTE UÑA ENTRADA | INPUT CLAW SUPPORT | 1 | 1 | 1 | 1 | | | | |
| | Q012042000 | TORNILLO EXAGONAL M6X15 A304 | HEXAGONAL BOLT M6x15 A304 | 2 | 2 | 2 | 2 | | | | |
| | Q232050000 | ARANDELA A8 | WASHER A8 | 4 | 4 | 4 | 4 | | | | |
| | Q232040000 | ARANDELA A6 | WASHER A6 | 2 | 2 | 2 | 2 | | | | |
| | Q222012000 | TUERCA AUTOBLOCANTE M6 | SELF-LOCKING NUT M6 | 2 | 2 | 2 | 2 | | | | |
| 11 | Z275077000 | UÑA ARRASTRE IZQUIERDA LASER | LASER LEFT DRAG CLAW | 1 | 1 | 1 | 1 | | | | |
| | | | | | | | | | | | |

| MOD. | LAVAVAJILLAS MODULARES<br>MODULAR DISHWASHERS | ZONA | TUNEL ASPIRADOR DE VAHOS<br>STEAM INTAKE TUNNEL | PLANO | C-2154 |
|---|---|---|---|---|---|

| ITEM | CODIGO | DENOMINACION | TEXTO | FI-280<br>ECO-280 | FI-370<br>ECO-370 | FI-460<br>ECO-460 | FI-550<br>ECO-550 | | | | NOTAS |
|---|---|---|---|---|---|---|---|---|---|---|---|
| 12 | Z275078000 | UÑA ARRASTRE DERECHA LASER | LASER RIGHT DRAG CLAW | 1 | 1 | 1 | 1 | | | | |
| | Q232050000 | ARANDELA A8 | WASHER A8 | 4 | 4 | 4 | 4 | | | | |
| | Q152046000 | TORNILLO EXAGON. CON CUELLO | HEXAGONAL BOLT. WITH NECK | 2 | 2 | 2 | 2 | | | | |
| | Q232040000 | ARANDELA A6 | WASHER A6 | 2 | 2 | 2 | 2 | | | | |
| | Q222012000 | TUERCA AUTOBLOCANTE M6 | SELF-LOCKING NUT M6 | 2 | 2 | 2 | 2 | | | | |
| S/Nº | Z336201000 | JUNTA ANTERIOR MODULAR | FRONT MODULAR JOINT | 1 | 2 | 2 | 3 | | | | |
| S/Nº | Z336202000 | JUNTA POSTERIOR MODULAR | REAR MODULAR JOINT | 1 | 2 | 2 | 3 | | | | |
| S/Nº | Z336203000 | JUNTA SUPERIOR MODULAR | UPPER MODULAR JOINT | 1 | 3 | 3 | 3 | | | | |
| S/Nº | Z336204000 | JUNTA INFERIOR MODULAR | LOWER MODULAR JOINT | 1 | 3 | 3 | 3 | | | | |

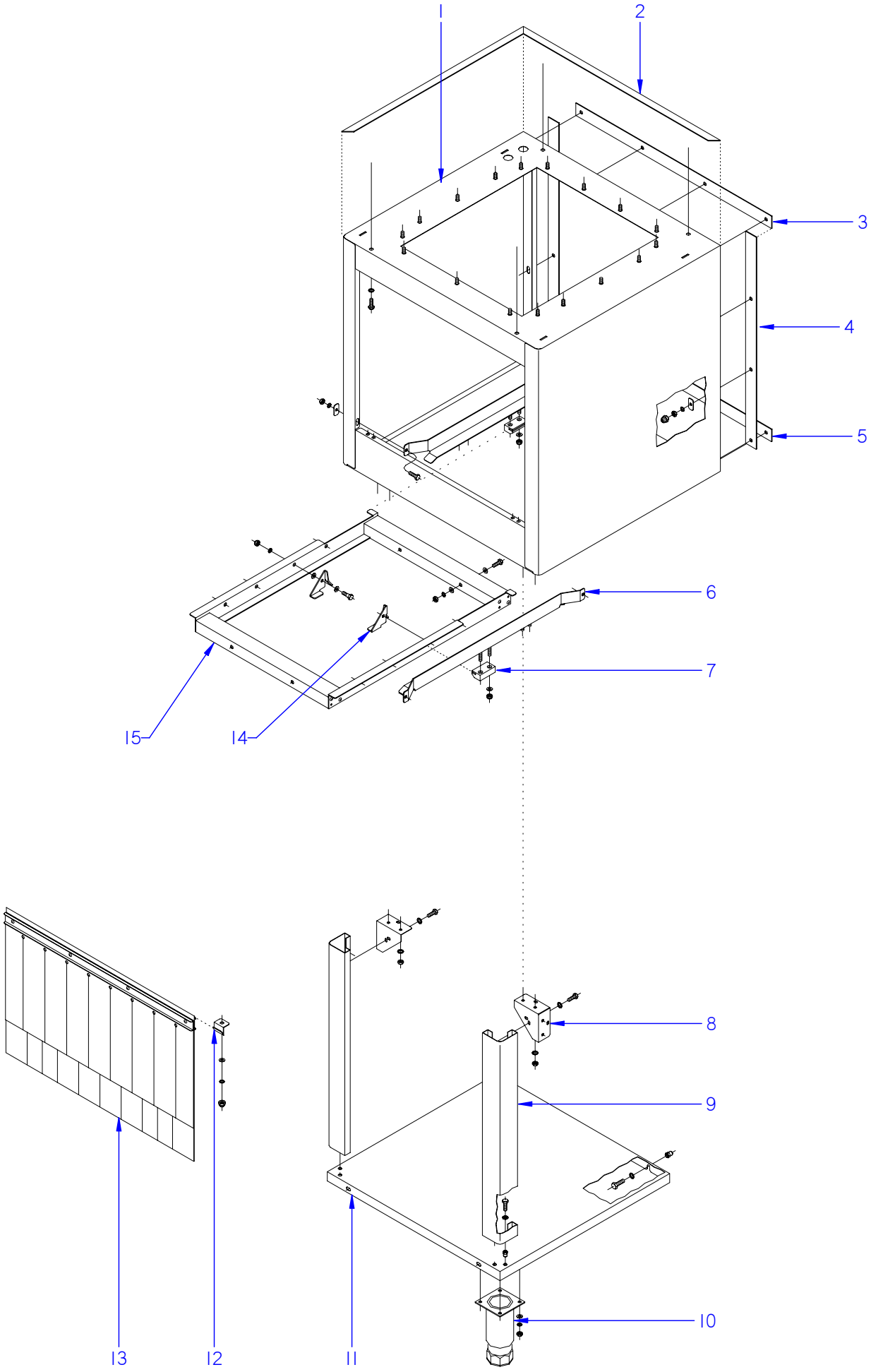


ITEM MARCADO EN COLOR = REPUESTO RECOMENDADO
COLOURED ITEM = RECOMMENDED SPARE PART

| N plano | Firma | Fecha | Aparato | Lamina | |
|---|---|---|---|---|---|
| C-2155 | | 2008-11 | TUNEL CONDENSADOR DE VAHOS<br>LAVAVAJILLAS MODULARES | 16 | Fagor Industrial S.Coop. FAGOR<br>Oñate |

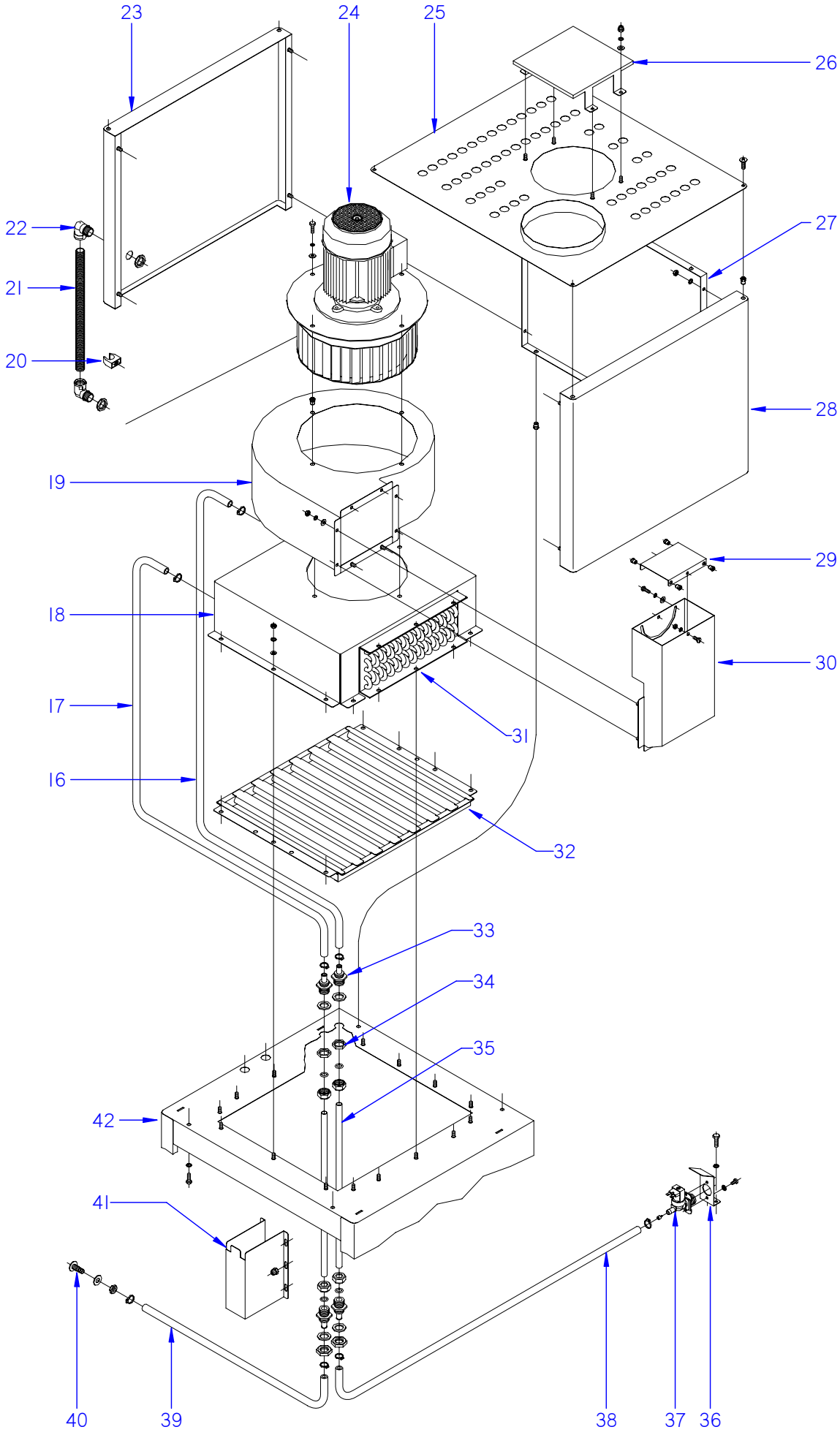


ITEM MARCADO EN COLOR = REPUESTO RECOMENDADO
COLOURED ITEM = RECOMMENDED SPARE PART

| N plano | Firma | Fecha | Aparato | | Lamina | |
|---|---|---|---|---|---|---|
| C-2156 | | 2008-11 | CONDENSADOR DE VAHOS<br>LAVAVAJILLAS MODULARES | | 17 | Fagor Industrial S.Coop.<br>Oñate |

| MOD. | LAVAVAJILLAS MODULARES<br>MODULAR DISHWASHERS | ZONA | TUNEL CONDENSADOR DE VAHOS<br>STEAM CONDENSER TUNNEL | PLANO | C-2155<br>C-2156 |
|---|---|---|---|---|---|

| ITEM | CODIGO | DENOMINACION | TEXTO | TUNEL COND. DE VAHOS | | | | | | | NOTAS |
|---|---|---|---|---|---|---|---|---|---|---|---|
| 1 | Z276732000 | TUNEL CONDENSADOR DE VAHOS ( | COMP STEAM CONDENSER TUN | 1 | | | | | | | |
| | Z276520000 | PROTECTOR SUPERIOR SOLDAD. | WELDED UPPER PROTECTOR | 1 | | | | | | | |
| 2 | Z270334000 | PERFIL | PROFILE | 4 | | | | | | | |
| 3 | Z276206000 | JUNTA SUPERIOR COMPACTO** | COMPACT UPPER JOINT** | 1 | | | | | | | |
| 4 | Z276208000 | JUNTA LATERAL COMPACTO** | COMPACT SIDE JOINT** | 2 | | | | | | | |
| 5 | Z276207000 | JUNTA INFERIOR COMPACTO** | COMPACT LOWER JOINT ** | 1 | | | | | | | |
| | Q302022000 | ARANDELA 16X6X1.2 A.304 | WASHER 16X6X1.2 A.304 | 12 | | | | | | | |
| | Q262040000 | ARANDELA GROW. A6 A304 | WASHER GROW. A6 A304 | 12 | | | | | | | |
| | Q162040000 | TUERCA EXAGONAL M6 | HEXAGONAL NUT M6 | 12 | | | | | | | |
| | Q212040000 | TUERCA SOMBRERETE M6 | COWL NUT M6 | 10 | | | | | | | |
| 6 | Z276309000 | GUIA DE SECADO COMPLETO | COMPLETE DRYER GUIDE | 2 | | | | | | | |
| 7 | Z275075000 | DESLIZAMIENTO GUIAS | GUIDE SLIDE | 4 | | | | | | | |
| | Q232040000 | ARANDELA A6 | WASHER A6 | 8 | | | | | | | |
| | Q222012000 | TUERCA AUTOBLOCANTE M6 | SELF-LOCKING NUT M6 | 8 | | | | | | | |
| | Q012042000 | TORNILLO EXAGONAL M6X15 A304 | HEXAGONAL BOLT M6x15 A304 | 4 | | | | | | | |
| | Q262040000 | ARANDELA GROW. A6 A304 | WASHER GROW. A6 A304 | 4 | | | | | | | |
| | Z310341000 | ARANDELA RECTANGULAR | RECTANGULAR WASHER | 4 | | | | | | | |
| | Q162040000 | TUERCA EXAGONAL M6 | HEXAGONAL NUT M6 | 4 | | | | | | | |
| 8 | Z276354000 | AMARRE PATA | LEG FASTENING | 2 | | | | | | | |
| | Q262040000 | ARANDELA GROW. A6 A304 | WASHER GROW. A6 A304 | 4 | | | | | | | |
| | Q162040000 | TUERCA EXAGONAL M6 | HEXAGONAL NUT M6 | 4 | | | | | | | |
| 9 | Z276395000 | PATA TUNEL SECADO COMPLETA | COMPLETE DRYER TUNNEL LEG | 2 | | | | | | | ELIMINADO 19.12.13 |
| 9 | 12098654 | PATA TUNEL SECADO COMPLETA | COMPLETE DRYER TUNNEL LEG | 2 | | | | | | | INTRODUCIDO 19.12.13 |
| 10 | X260151000 | PATA REGULABLE | ADJUSTABLE LEG | 2 | | | | | | | |
| | Q302022000 | ARANDELA 16X6X1.2 A.304 | WASHER 16X6X1.2 A.304 | 8 | | | | | | | |
| | Q262040000 | ARANDELA GROW. A6 A.304 | WASHER GROW. A6 A.304 | 8 | | | | | | | |
| | Q162040000 | TUERCA EXAGONAL M6 | HEXAGONAL NUT M6 | 8 | | | | | | | |
| 11 | Z276398000 | BANDEJA TUNEL SECADO COMPL. | COMPL. DRYER TUNNEL TRAY | 1 | | | | | | | |
| | Q221342000 | REMACHE EXAGONAL M5 | HEXAGONAL RIVET M5 | 8 | | | | | | | |
| | Q242030000 | ARANDELA ABANICO A5 A.304 | FAN WASHER A5 A.304 | 8 | | | | | | | |
| | Q012031000 | TORNILLO EXAGONAL M5X10 A304 | HEXAGONAL BOLT M5x10 A304 | 8 | | | | | | | |

| MOD. | LAVAVAJILLAS MODULARES<br>MODULAR DISHWASHERS | ZONA | TUNEL CONDENSADOR DE VAHOS<br>STEAM CONDENSER TUNNEL | PLANO | C-2155<br>C-2156 |
|---|---|---|---|---|---|

| ITEM | CODIGO | DENOMINACION | TEXTO | TUNEL COND. DE VAHOS | | | | | | | NOTAS |
|---|---|---|---|---|---|---|---|---|---|---|---|
| 12 | Z270326000 | SUJECION CORTINA | CURTAIN FASTENING | 2 | | | | | | | |
| | Q262030000 | ARANDELA GROW. A5 A.304 | WASHER GROW. A5 A.304 | 2 | | | | | | | |
| | Q232040000 | ARANDELA A6 | WASHER A6 | 2 | | | | | | | |
| 13 | Z276419000 | CORTINA EXTERIOR COMPLETA | COMPLETE EXTERIOR CURTAIN | 1 | | | | | | | |
| 14 | Z275077000 | UÑA ARRASTRE IZQUIERDA LASER | LASER LEFT DRAG CLAW | 5 | | | | | | | |
| S/Nº | Z275078000 | UÑA ARRASTRE DERECHA LASER | LASER RIGHT DRAG CLAW | 5 | | | | | | | |
| | Q232050000 | ARANDELA A8 | WASHER A8 | 20 | | | | | | | |
| | Q152046000 | TORNILLO EXAGON. CON CUELLO | HEXAGONAL BOLT. WITH NECK | 10 | | | | | | | |
| | Q232040000 | ARANDELA A6 | WASHER A6 | 10 | | | | | | | |
| | Q222012000 | TUERCA AUTOBLOCANTE M6 | SELF-LOCKING NUT M6 | 10 | | | | | | | |
| 15 | Z276311000 | SOPORTE UÑA SECADO COMPL. | COMPL. DRYER CLAY SUPPORT | 1 | | | | | | | |
| | Q012042000 | TORNILLO EXAGONAL M6X15 A304 | HEXAGONAL BOLT M6x15 A304 | 2 | | | | | | | |
| | Q232050000 | ARANDELA A8 | WASHER A8 | 4 | | | | | | | |
| | Q232040000 | ARANDELA A6 | WASHER A6 | 2 | | | | | | | |
| | Q222012000 | TUERCA AUTOBLOCANTE M6 | SELF-LOCKING NUT M6 | 2 | | | | | | | |
| 16 | 3676900000 | TUBO GOMA NEGRA Ø 17*10 | BLACK RUBBER PIPE 17*10 | 1 | | | | | | | |
| | Q881302000 | ABRAZADERA 12-20 | CLAMP 12-20 | 2 | | | | | | | |
| 17 | 3676900000 | TUBO GOMA NEGRA Ø 17*10 | BLACK RUBBER PIPE 17*10 | 1 | | | | | | | |
| | Q881302000 | ABRAZADERA 12-20 | CLAMP 12-20 | 2 | | | | | | | |
| 18 | Z276741000 | CUBIERTA BATERIA | BATTERY COVER | 1 | | | | | | | |
| | Q221343000 | REMACHE EXAGONAL M6 | HEXAGONAL RIVET M6 | 4 | | | | | | | |
| | Q262040000 | ARANDELA GROW. A6 A.304 | WASHER GROW. A6 A.304 | 12 | | | | | | | |
| | Q162040000 | TUERCA EXAGONAL M6 | HEXAGONAL NUT M6 | 12 | | | | | | | |
| 19 | Z276742000 | CUBIERTA VENTOLA COMPLETA | COMPLETE VENTOLA COVER | 1 | | | | | | | |
| | Q221343000 | REMACHE EXAGONAL M6 | HEXAGONAL RIVET M6 | 8 | | | | | | | |
| 20 | Z316354000 | ABRAZADERA DE PRESION | PRESSURE CLAMP | 2 | | | | | | | |
| 21 | 3712300000 | TUBO PG21 0233.204.023 | PIPE PG21 0233.204.023 | 1 | | | | | | | |
| 22 | Z703006000 | RACORD A 90 SFWO-P213T | CONNECTION A 90 SFWO-P213T | 2 | | | | | | | |
| | R023025000 | CONTRATUERCA (GAES) | COUNTERNUT (GAES) | 2 | | | | | | | |
| 23 | Z276752000 | POSTERIOR CUBIERTA COMPL. | COMPLETE REAR COVER | 1 | | | | | | | |
| 24 | Z276760000 | VENTILADOR CENTRIFUGO | SPIN FAN | 1 | | | | | | | |

| MOD. | LAVAVAJILLAS MODULARES<br>MODULAR DISHWASHERS | ZONA | TUNEL CONDENSADOR DE VAHOS<br>STEAM CONDENSER TUNNEL | PLANO | C-2155<br>C-2156 |
|---|---|---|---|---|---|

| ITEM | CODIGO | DENOMINACION | TEXTO | TUNEL COND. DE VAHOS | | | | | | | NOTAS |
|---|---|---|---|---|---|---|---|---|---|---|---|
| 25 | Z276756000 | TAPA CUBIERTA COMPLETA | COMPLETE COVER LID | 1 | | | | | | | |
| | Q152017000 | TORNILLO AMARRE M6X13 A304 | FASTENING BOLT M6X13 A304 | 4 | | | | | | | |
| | Q221343000 | REMACHE EXAGONAL M6 | HEXAGONAL RIVET M6 | 8 | | | | | | | |
| 26 | Z276759000 | CUBIERTA MOTOR | MOTOR COVER | | | | | | | | |
| | Q262040000 | ARANDELA GROW. A6 A.304 | WASHER GROW. A6 A.304 | 16 | | | | | | | |
| | Q162040000 | TUERCA EXAGONAL M6 | HEXAGONAL NUT M6 | 16 | | | | | | | |
| 27 | Z276751000 | LATERAL CUBIERTA | SIDE COVER | 2 | | | | | | | |
| 28 | Z276342000 | ANTERIOR CUBIERTA COMPLETA | COMPLETE FRONT COVER | 1 | | | | | | | |
| 29 | Z276755000 | REGULADOR SALIDA AIRE | AIR OUTPUT CONTROL | 1 | | | | | | | |
| | Q152047000 | TORNILLO EXAGON. CON CUELLO | HEXAGONAL BOLT. WITH NECK | 2 | | | | | | | |
| | Q232050000 | ARANDELA A8 | WASHER A8 | 2 | | | | | | | |
| | Q262030000 | ARANDELA GROW. A5 A.304 | WASHER GROW. A5 A.304 | 2 | | | | | | | |
| | Q162030000 | TUERCA EXAGONAL M5 | HEXAGONAL NUT M5 | 2 | | | | | | | |
| | Q222011000 | REMACHE EXAGONAL M5 (INOX) | HEXAGONAL RIVET M5 (INOX) | 2 | | | | | | | |
| 30 | Z276746000 | SALIDA AIRE COMPLETO | COMPLETE AIR OUTPUT | 1 | | | | | | | |
| | Q232040000 | ARANDELA A6 | WASHER A6 | 4 | | | | | | | |
| | Q162040000 | TUERCA EXAGONAL M6 | HEXAGONAL NUT M6 | 4 | | | | | | | |
| | Q262040000 | ARANDELA GROW. A6 A.304 | WASHER GROW. A6 A.304 | 12 | | | | | | | |
| | Q012042000 | TORN.EXA. M6X15 AISI 304 | HEX BOLT M6X15 AISI 304 | 8 | | | | | | | |
| 31 | Z276762000 | BATERIA COMPLETA | COMPLETE BATTERY | 1 | | | | | | | |
| 32 | Z276734000 | REJILLA ASPIRACION VAHOS COM. | COM. STEAM EXTRACT. GRILLE | 1 | | | | | | | |
| 33 | Z271901000 | PASAMUROS ACLARADO | RINSE BUSHING | 4 | | | | | | | |
| | Q307032000 | JUNTA 32X21X3 | JOINT 32X21X3 | 4 | | | | | | | |
| 34 | Q223031000 | TUERCA M.24x2.5 | NUT M.24X2.5 | 2 | | | | | | | |
| | Q223023000 | TUERCA EXAGONAL 5-8 LATON | HEX NUT 5-8 BRASS | 2 | | | | | | | |
| 35 | Z276761000 | TUBO EMPALME | CONNECTION PIPE | 2 | | | | | | | |
| | Q307063000 | JUNTA TORICA 12.29X19.35X3.53 | O-RING 12.29X19.35X3.53 | 4 | | | | | | | |
| | Q223108000 | TUERCA M.24X2.5 | NUT M.24X2.5 | 4 | | | | | | | |
| | | | | | | | | | | | |
| | | | | | | | | | | | |
| | | | | | | | | | | | |

| MOD. | LAVAVAJILLAS MODULARES<br>MODULAR DISHWASHERS | ZONA | TUNEL CONDENSADOR DE VAHOS<br>STEAM CONDENSER TUNNEL | PLANO | C-2155<br>C-2156 |
|---|---|---|---|---|---|

| ITEM | CODIGO | DENOMINACION | TEXTO | TUNEL COND. DE VAHOS | | | | | | | NOTAS |
|---|---|---|---|---|---|---|---|---|---|---|---|
| 36 | Z201101000 | ESCUADRA AMARRE ELECTROVA | SOLENOID VALVE BRACKET | 1 | | | | | | | |
| | Q032021000 | TORNILLO ALOMADO M4X10 | CURVED SCREW M4X10 | 2 | | | | | | | |
| | Q232020000 | ARANDELA A-4 | WASHER A-4 | 2 | | | | | | | |
| | Q242020000 | ARANDELA ABANICO A.4 A304 | FAN WASHER A.4 A304 | 2 | | | | | | | |
| | Q012042000 | TORNILLO EXAGONAL M6X15 A304 | HEXAGONAL BOLT M6x15 A304 | 2 | | | | | | | |
| | Q262040000 | ARANDELA GROW. A6 A.304 | WASHER GROW. A6 A.304 | 14 | | | | | | | |
| 37 | Z106811000 | ELECTROVALVULA MONTADA | SOLENOID VALVE MOUNTED | 1 | | | | | | | |
| 38 | 3676900000 | TUBO GOMA NEGRA Ø 17*10 | BLACK RUBBER PIPE 17*10 | 1 | | | | | | | |
| | Q881302000 | ABRAZADERA 12-20 | CLAMP 12-20 | 2 | | | | | | | |
| 39 | 3676900000 | TUBO GOMA NEGRA Ø 17*10 | BLACK RUBBER PIPE 17*10 | 1 | | | | | | | |
| | Q881302000 | ABRAZADERA 12-20 | CLAMP 12-20 | 2 | | | | | | | |
| 40 | Z600907000 | TOMA DE PRESION | PRESSURE CONNECTION | 1 | | | | | | | |
| | Z600908000 | ARANDELA | WASHER | 1 | | | | | | | |
| | Q223013000 | TUERCA | NUT | 1 | | | | | | | |
| 41 | Z276772000 | CUBIERTA | COVER | 1 | | | | | | | |
| | Q152014000 | PERNO SOLDADO M5X10 | WELDED BOLT M5X10 | 6 | | | | | | | |
| | Q212031000 | TUERCA SOMBRERETE M5 | COWL NUT M5 | 6 | | | | | | | |
| 42 | Z276732000 | TUNEL CONDENSADOR DE VAHOS | COMP STEAM CONDENSER TUN | 1 | | | | | | | |
| S/Nº | Z316702000 | CABLEADO CONDENSADOR | CONDENSER WIRING | 1 | | | | | | | |
| | | | | | | | | | | | |
| | | | | | | | | | | | |
| | | | | | | | | | | | |
| | | | | | | | | | | | |
| | | | | | | | | | | | |
| | | | | | | | | | | | |
| | | | | | | | | | | | |
| | | | | | | | | | | | |
| | | | | | | | | | | | |
| | | | | | | | | | | | |
| | | | | | | | | | | | |
| | | | | | | | | | | | |

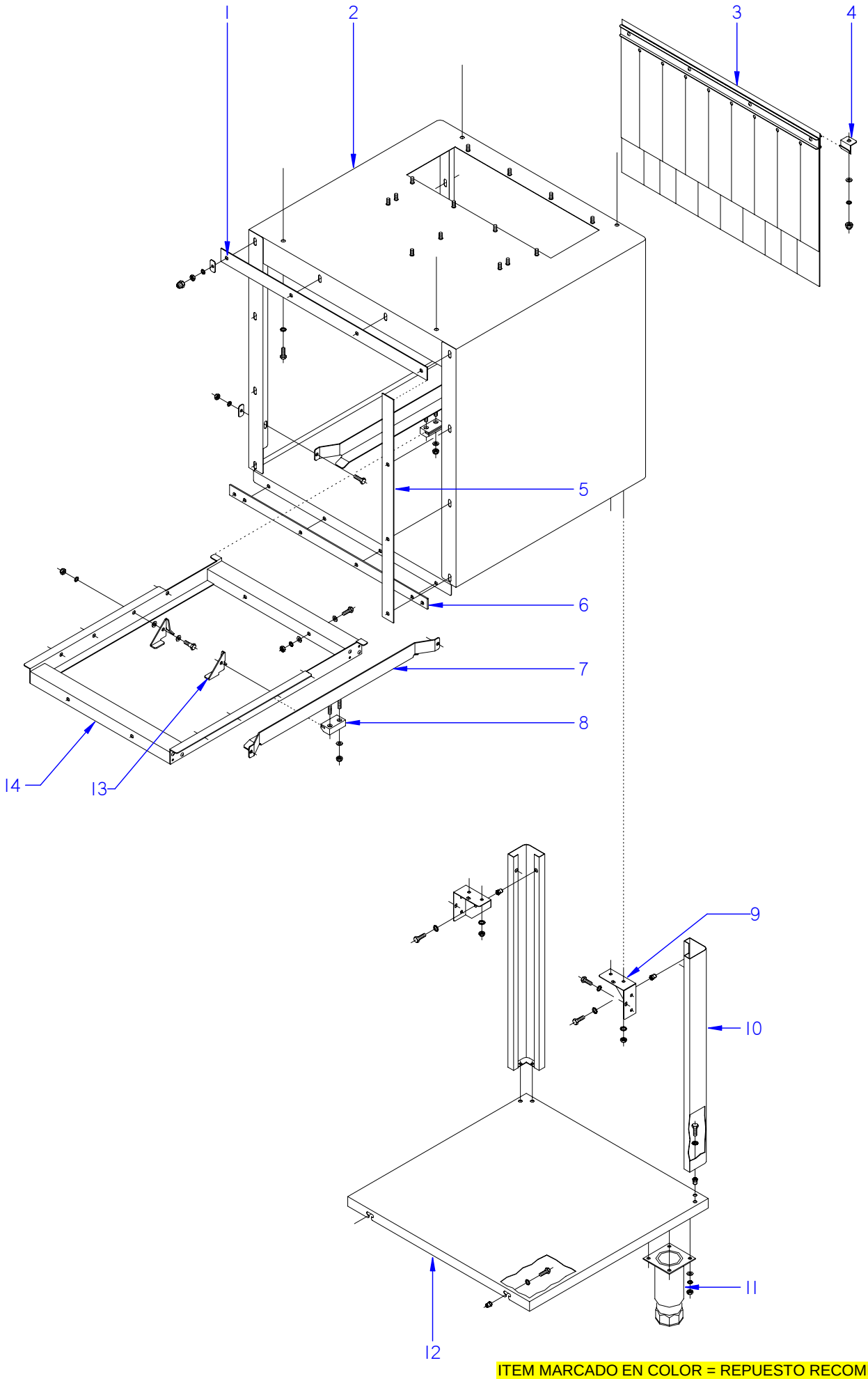


ITEM MARCADO EN COLOR = REPUESTO RECOMENDADO
COLOURED ITEM = RECOMMENDED SPARE PART

| N plano | Firma | Fecha | Aparato | | Lamina | |
|---|---|---|---|---|---|---|
| C-2157 | | 2008-11 | TUNEL DE SECADO<br>LAVAVAJILLAS MODULARES | | 18 | Fagor Industrial S.Coop.<br>Oñate |

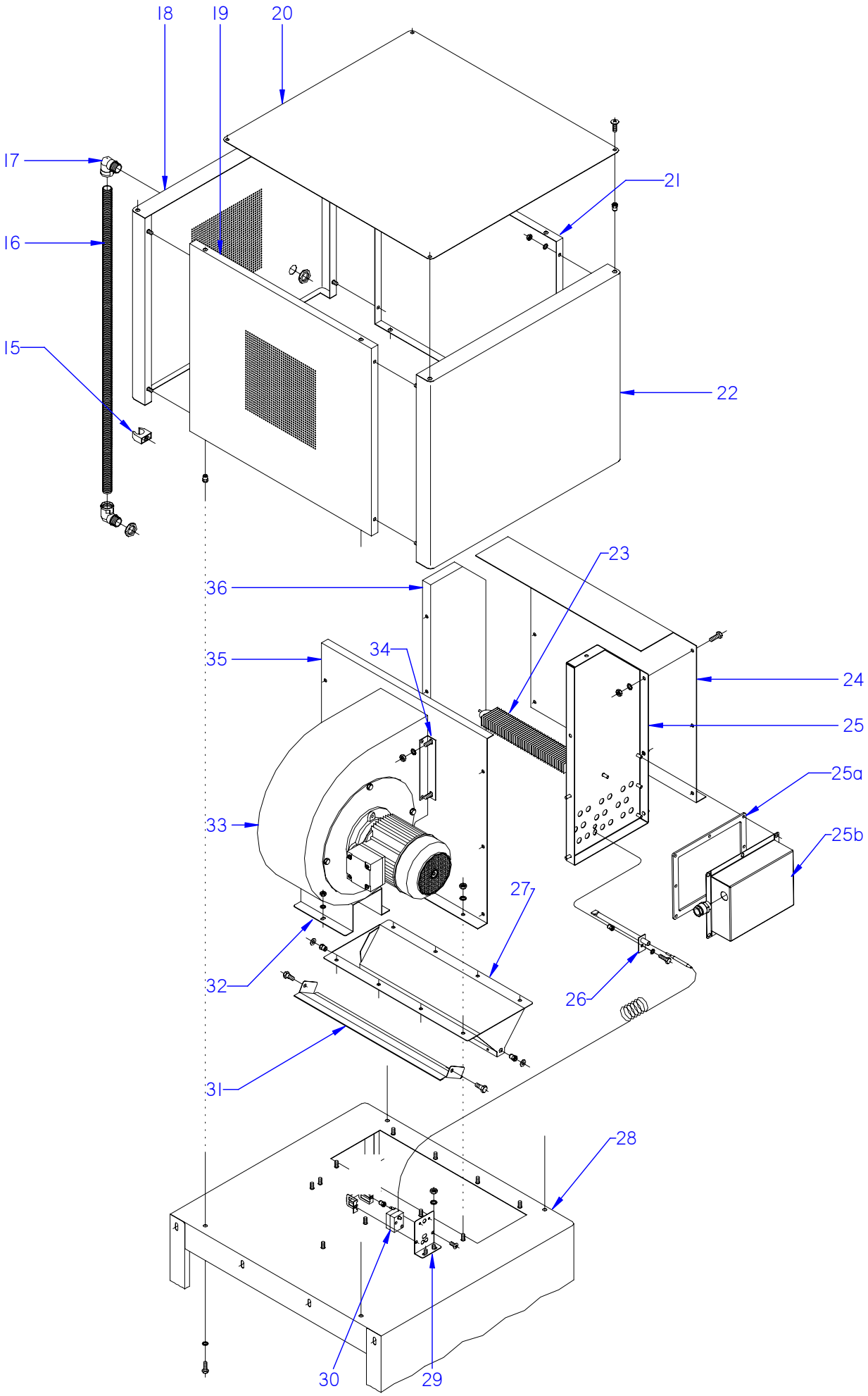


ITEM MARCADO EN COLOR = REPUESTO RECOMENDADO
COLOURED ITEM = RECOMMENDED SPARE PART

| N plano | Firma | Fecha | Aparato | SECADO | Lamina | |
|---|---|---|---|---|---|---|
| C-2158 | | 2008-11 | LAVAVAJILLAS MODULARES | | 19 | Fagor Industrial S.Coop. FAGOR Oñate |

| MOD. | LAVAVAJILLAS MODULARES<br>MODULAR DISHWASHERS | ZONA | TUNEL DE SECADO / DRYING TUNNEL | PLANO | C-2157<br>C-2158 |
|---|---|---|---|---|---|

| ITEM | CODIGO | DENOMINACION | TEXTO | TUNEL DE SECADO 600 | TUNEL DE SECADO 800 | | | | | | NOTAS |
|---|---|---|---|---|---|---|---|---|---|---|---|
| 1 | Z276206000 | JUNTA SUPERIOR COMPACTO** | COMPACT UPPER JOINT** | 1 | 1 | | | | | | |
| | Q302022000 | ARANDELA 16X6X1.2 A.304 | WASHER 16X6X1.2 A.304 | 4 | 4 | | | | | | |
| | Q262040000 | ARANDELA GROW. A6 A304 | WASHER GROW. A6 A304 | 4 | 4 | | | | | | |
| | Q162040000 | TUERCA EXAGONAL M6 | HEXAGONAL NUT M6 | 12 | 12 | | | | | | |
| 2 | Z276301000 | TUNEL SECADO SOLDADO | WELDED DRYER TUNNEL | 1 | _ | | | | | | |
| 2 | Z316301000 | TUNEL SECADO SOLDADO | WELDED DRYER TUNNEL | _ | 1 | | | | | | |
| 3 | Z276429000 | CORTINA INTERIOR COMPLETA | COMPLETE INTERIOR CURTAIN | 1 | 1 | | | | | | |
| 4 | Z270326000 | SUJECION CORTINA | CURTAIN FASTENING | 2 | 2 | | | | | | |
| | Q262030000 | ARANDELA GROW. A5 A.304 | WASHER GROW. A5 A.304 | 2 | 2 | | | | | | |
| | Q232040000 | ARANDELA A6 | WASHER A6 | 2 | 2 | | | | | | |
| | Q212031000 | TUERCA SOMBRERETE M5 | COWL NUT M5 | 2 | 2 | | | | | | |
| 5 | Z276208000 | JUNTA LATERAL COMPACTO** | COMPACT SIDE JOINT** | 2 | 2 | | | | | | |
| | Q302022000 | ARANDELA 16X6X1.2 A.304 | WASHER 16X6X1.2 A.304 | 8 | 8 | | | | | | |
| | Q262040000 | ARANDELA GROW. A6 A304 | WASHER GROW. A6 A304 | 8 | 8 | | | | | | |
| | Q162040000 | TUERCA EXAGONAL M6 | HEXAGONAL NUT M6 | 8 | 8 | | | | | | |
| 6 | Z276207000 | JUNTA INFERIOR COMPACTO** | COMPACT LOWER JOINT ** | 1 | 1 | | | | | | |
| | Q302022000 | ARANDELA 16X6X1.2 A.304 | WASHER 16X6X1.2 A.304 | 4 | 4 | | | | | | |
| | Q262040000 | ARANDELA GROW. A6 A304 | WASHER GROW. A6 A304 | 4 | 4 | | | | | | |
| | Q162040000 | TUERCA EXAGONAL M6 | HEXAGONAL NUT M6 | 4 | 4 | | | | | | |
| 7 | Z276309000 | GUIA DE SECADO COMPLETO 600 | COMPLETE DRYER GUIDE 600 | 2 | _ | | | | | | |
| 7 | Z316341000 | GUIA DE SECADO COMPLETO 800 | COMPLETE DRYER GUIDE 800 | _ | 2 | | | | | | |
| 8 | Z275075000 | DESLIZAMIENTO GUIAS | GUIDE SLIDE | 4 | 4 | | | | | | |
| | Q232040000 | ARANDELA A6 | WASHER A6 | 8 | 8 | | | | | | |
| | Q222012000 | TUERCA AUTOBLOCANTE M6 | SELF-LOCKING NUT M6 | 8 | 8 | | | | | | |
| | Q012042000 | TORNILLO EXAGONAL M6X15 A304 | HEXAGONAL BOLT M6x15 A304 | 4 | 4 | | | | | | |
| | Q262040000 | ARANDELA GROW. A6 A304 | WASHER GROW. A6 A304 | 4 | 4 | | | | | | |
| | Z310341000 | ARANDELA RECTANGULAR | RECTANGULAR WASHER | 4 | 4 | | | | | | |
| | Q162040000 | TUERCA EXAGONAL M6 | HEXAGONAL NUT M6 | 4 | 4 | | | | | | |
| 9 | Z276354000 | AMARRE PATA | LEG FASTENING | 2 | 2 | | | | | | |
| | Q262040000 | ARANDELA GROW. A6 A304 | WASHER GROW. A6 A304 | 4 | 4 | | | | | | |
| | Q162040000 | TUERCA EXAGONAL M6 | HEXAGONAL NUT M6 | 4 | 4 | | | | | | |

| MOD. | LAVAVAJILLAS MODULARES<br>MODULAR DISHWASHERS | ZONA | TUNEL DE SECADO / DRYING TUNNEL | PLANO | C-2157<br>C-2158 |
|---|---|---|---|---|---|

| ITEM | CODIGO | DENOMINACION | TEXTO | TUNEL DE SECADO 600 | TUNEL DE SECADO 800 | | | | | | NOTAS |
|---|---|---|---|---|---|---|---|---|---|---|---|
| 10 | Z276395000 | PATA TUNEL SECADO COMPLETA | COMPLETE DRYER TUNNEL LEG | 2 | 2 | | | | | | ELIMINADO 19.12.13 |
| 10 | 12098654 | PATA TUNEL SECADO COMPLETA | COMPLETE DRYER TUNNEL LEG | 2 | 2 | | | | | | INTRODUCIDO 19.12.13 |
| 11 | X260151000 | PATA REGULABLE | ADJUSTABLE LEG | 2 | 2 | | | | | | |
| | Q302022000 | ARANDELA 16X6X1.2 A.304 | WASHER 16X6X1.2 A.304 | 8 | 8 | | | | | | |
| | Q162040000 | TUERCA EXAGONAL M6 | HEXAGONAL NUT M6 | 8 | 8 | | | | | | |
| 12 | Z276398000 | BANDEJA TUNEL SECADO COMPL. | COMPL. DRYER TUNNEL TRAY | 1 | _ | | | | | | |
| 12 | Z316333000 | BANDEJA TUNEL SECADO COMPL. | COMPL. DRYER TUNNEL TRAY | _ | 1 | | | | | | |
| | Q221342000 | REMACHE EXAGONAL M5 | HEXAGONAL RIVET M5 | 8 | 8 | | | | | | |
| | Q242030000 | ARANDELA ABANICO A5 A.304 | FAN WASHER A5 A.304 | 8 | 8 | | | | | | |
| | Q012031000 | TORNILLO EXAGONAL M5X10 A304 | HEXAGONAL BOLT M5x10 A304 | 8 | 8 | | | | | | |
| 13 | Z275077000 | UÑA ARRASTRE IZQUIERDA LASER | LASER LEFT DRAG CLAW | 5 | 5 | | | | | | |
| S/Nº | Z275078000 | UÑA ARRASTRE DERECHA LASER | LASER RIGHT DRAG CLAW | 5 | 5 | | | | | | |
| | Q232050000 | ARANDELA A8 | WASHER A8 | 20 | 20 | | | | | | |
| | Q152046000 | TORNILLO EXAGON. CON CUELLO | HEXAGONAL BOLT. WITH NECK | 10 | 10 | | | | | | |
| | Q232040000 | ARANDELA A6 | WASHER A6 | 10 | 10 | | | | | | |
| | Q222012000 | TUERCA AUTOBLOCANTE M6 | SELF-LOCKING NUT M6 | 10 | 10 | | | | | | |
| 14 | Z276311000 | SOPORTE UÑA SECADO COMPL. | COMPL. DRYER CLAY SUPPORT | 1 | _ | | | | | | |
| 14 | Z316306000 | SOPORTE UÑA SECADO COMPLETO | COMPL. DRYER CLAW SUPPORT | _ | 1 | | | | | | |
| | Q012042000 | TORNILLO EXAGONAL M6X15 A304 | HEXAGONAL BOLT M6x15 A304 | 2 | 2 | | | | | | |
| | Q232050000 | ARANDELA A8 | WASHER A8 | 4 | 4 | | | | | | |
| | Q232040000 | ARANDELA A6 | WASHER A6 | 2 | 2 | | | | | | |
| | Q222012000 | TUERCA AUTOBLOCANTE M6 | SELF-LOCKING NUT M6 | 2 | 2 | | | | | | |
| 15 | Z316354000 | ABRAZADERA DE PRESION | PRESSURE CLAMP | 2 | 2 | | | | | | |
| 16 | 3712300000 | TUBO PG21 0233.204.023 | PIPE PG21 0233.204.023 | 1 | 1 | | | | | | |
| 17 | Z703006000 | RACORD A 90 SFWO-P213T | CONNECTION A 90 SFWO-P213T | 2 | 2 | | | | | | ELIMINADO 30.03.09 |
| 17 | Z276307000 | CODO CURVADO 90º VBD-P213GT | BENDING ELBOW 90º VBD-P213 | 2 | 2 | | | | | | INTRODUCIDO 30.03.09 |
| | R023025000 | CONTRATUERCA (GAES) | COUNTERNUT (GAES) | 2 | 2 | | | | | | |
| 18 | Z276361000 | POSTERIOR CUBIERTA COMPLET. | COMPLETE REAR COVER | 1 | _ | | | | | | ELIMINADO 16.12.13 |
| 18 | 12098292 | POSTERIOR CUBIERTA COMPLET. | COMPLETE REAR COVER | 1 | _ | | | | | | INTRODUCIDO 16.12.13 |
| 18 | Z316324000 | POSTERIOR CUBIERTA COMPLET. | COMPLETE REAR COVER | _ | 1 | | | | | | |
| 19 | Z276345000 | LATERAL CUBIERTA | SIDE COVER | 1 | 2 | | | | | | |

| MOD. | LAVAVAJILLAS MODULARES<br>MODULAR DISHWASHERS | ZONA | TUNEL DE SECADO / DRYING TUNNEL | PLANO | C-2157<br>C-2158 |
|---|---|---|---|---|---|

| ITEM | CODIGO | DENOMINACION | TEXTO | TUNEL DE SECADO 600 | TUNEL DE SECADO 800 | | | | | | NOTAS |
|---|---|---|---|---|---|---|---|---|---|---|---|
| 20 | Z276346000 | TAPA CUBIERTA | COVER LID | 1 | _ | | | | | | |
| 20 | Z316326000 | TAPA CUBIERTA | COVER LID | _ | 1 | | | | | | |
| | Q162040000 | TUERCA EXAGONAL M6 | HEXAGONAL NUT M6 | 16 | 16 | | | | | | |
| | Q152017000 | TORNILLO AMARRE M6X13 A304 | FASTENING BOLT M6X13 A304 | 4 | 4 | | | | | | |
| | Q221343000 | REMACHE EXAGONAL M6 | HEXAGONAL RIVET M6 | 8 | 8 | | | | | | |
| 21 | Z276751000 | LATERAL CUBIERTA | SIDE COVER | 1 | _ | | | | | | |
| 22 | Z276342000 | ANTERIOR CUBIERTA COMPLETA | COMPLETE FRONT COVER | 1 | _ | | | | | | |
| 22 | Z316322000 | ANTERIOR CUBIERTA COMPLETA | COMPLETE FRONT COVER | _ | 1 | | | | | | |
| 23 | Z276391000 | RESISTENCIA ALETAS 1500W 230V | FIN RESISTOR 1500W 230V | 6 | 9 | | | | | | |
| | Q221305000 | TUERCA EXG. AUTO M4 ZINCADA | HEXAG. NUT AUTO M4 ZINC-COA | 12 | 18 | | | | | | |
| 24 | Z276326000 | LATERAL IZDO. CAJA RESISTENC. | LEFT SIDE RESISTOR BOX | 1 | _ | | | | | | ELIMINADO 04.01.10 |
| 24 | Z276340000 | LATERAL IZDO. CAJA RESISTENC. | LEFT SIDE RESISTOR BOX | 1 | _ | | | | | | INTRODUCIDO 04.01.10 |
| 24 | Z316316000 | LATERAL IZDO. CAJA RESISTENC. | LEFT SIDE RESISTOR BOX | _ | 1 | | | | | | |
| 25 | Z276329000 | FRONTAL CAJA RESISTENCIA | RESISTOR BOX FRONT | 1 | _ | | | | | | ELIMINADO 04.01.10 |
| 25 | Z276335000 | FRONTAL CAJA RESISTENCIA | RESISTOR BOX FRONT | 1 | _ | | | | | | INTRODUCIDO 04.01.10 |
| 25 | Z316319000 | FRONTAL CAJA RESISTENCIA | RESISTOR BOX FRONT | _ | 1 | | | | | | ELIMINADO 04.01.10 |
| 25 | Z316345000 | FRONTAL CAJA RESISTENCIAS | RESISTOR BOX FRONT | _ | 1 | | | | | | INTRODUCIDO 04.01.10 |
| 25a | Z276347000 | JUNTA SECADO 600 | DRYING 600 JOINT | 1 | _ | | | | | | INTRODUCIDO 04.01.10 |
| 25a | Z316344000 | JUNTA SECADO 800 | DRYING 800 JOINT | _ | 1 | | | | | | INTRODUCIDO 04.01.10 |
| 25b | Z276348000 | CAPERUZA SECADO 600 | DRYING 600 CAP | 1 | _ | | | | | | INTRODUCIDO 04.01.10 |
| 25b | Z316343000 | CAPERUZA SECADO 800 | DRYING 800 CAP | _ | 1 | | | | | | INTRODUCIDO 04.01.10 |
| 26 | Z276331000 | VAINA TS. COMPLETA | COMPLETE TS. SHELL | 1 | 1 | | | | | | |
| | Q012042000 | TORNILLO EXAGONAL M6X15 A304 | HEXAGONAL BOLT M6x15 A304 | 1 | 2 | | | | | | |
| | Q262040000 | ARANDELA GROW. A6 A.304 | WASHER GROW. A6 A.304 | 1 | 1 | | | | | | |
| | Q221343000 | REMACHE EXAGONAL M6 | HEXAGONAL RIVET M6 | 1 | 1 | | | | | | |
| 27 | Z276315000 | SALIDA SECADO SOLDADO | WELDED DRYER OUTPUT | 1 | _ | | | | | | |
| 27 | Z316386000 | SALIDA SECADO SOLDADO | WELDED DRYER OUTPUT | _ | 1 | | | | | | |
| | Q262040000 | ARANDELA GROW. A6 A.304 | WASHER GROW. A6 A.304 | 8 | 8 | | | | | | |
| | Q162040000 | TUERCA EXAGONAL M6 | HEXAGONAL NUT M6 | 16 | 16 | | | | | | |
| 28 | Z276301000 | TUNEL SECADO SOLDADO | WELDED DRYER TUNNEL | 1 | _ | | | | | | |
| 28 | Z316301000 | TUNEL SECADO SOLDADO | WELDED DRYER TUNNEL | _ | 1 | | | | | | |

| MOD. | LAVAVAJILLAS MODULARES<br>MODULAR DISHWASHERS | ZONA | TUNEL DE SECADO / DRYING TUNNEL | PLANO | C-2157<br>C-2158 |
|---|---|---|---|---|---|

| ITEM | CODIGO | DENOMINACION | TEXTO | TUNEL DE SECADO 600 | TUNEL DE SECADO 800 | | | | | | NOTAS |
|---|---|---|---|---|---|---|---|---|---|---|---|
| 29 | Z203047000 | SOPORTE TERMOSTATOS | THERMOSTAT SUPPORT | 1 | 1 | | | | | | |
| | Q232040000 | ARANDELA A6 | WASHER A6 | 2 | 2 | | | | | | |
| | Q162040000 | TUERCA EXAGONAL M6 | HEXAGONAL NUT M6 | 2 | 2 | | | | | | |
| | Q152024000 | TORNILLO AVELLANADO M4X8 | COUNTERSUNK BOLT M4x8 | 2 | 2 | | | | | | |
| 30 | Z203060000 | TERMOSTATO 150ºC | THERMOSTAT 150ºC | 1 | _ | | | | | | |
| 30 | Z276365000 | TERMOSTATO 150ºC | THERMOSTAT 150ºC | _ | 1 | | | | | | |
| 31 | Z276318000 | TAPA SALIDA SECADO | DRYER OUTPUT LID | 1 | _ | | | | | | |
| 31 | Z316388000 | TAPA SALIDA SECADO | DRYER OUTPUT LID | _ | 2 | | | | | | |
| | Q302022000 | ARANDELA 16X6X1.2 A.304 | WASHER 16X6X1.2 A.304 | 2 | 4 | | | | | | |
| | Q152046000 | TORNILLO EXAGON. CON CUELLO | HEXAGONAL BOLT. WITH NECK | 2 | 4 | | | | | | |
| 32 | Z276394000 | SOPORTE VENTILADOR | FAN BRACKET | 1 | _ | | | | | | |
| 32 | | SOPORTE VENT. (INCORPORADO) | FAN SUPPORT (BUILT-IN) | _ | 1 | | | | | | |
| | Q082005000 | TORNILLO CHAP. Ø4,2X13 4.2X13 | PLATE BOLT Ø4.2X13 4.2X13 | 4 | _ | | | | | | |
| | Q262040000 | ARANDELA GROW. A6 A.304 | WASHER GROW. A6 A.304 | 6 | _ | | | | | | |
| | Q162040000 | TUERCA EXAGONAL M6 | HEXAGONAL NUT M6 | 6 | _ | | | | | | |
| 33 | Z316412000 | VENTILADOR CENTRIFUGO | SPIN FAN | 1 | _ | | | | | | |
| 33 | Z316331000 | VENT CENT. (220/380) V 50-60 HZ | CENT. FAN (220/380) V 50-60 HZ | _ | 1 | | | | | | |
| 34 | Z276375000 | AMARRE VENTILADOR | FAN FASTENING | 2 | _ | | | | | | |
| 35 | Z276376000 | LATERAL DCHO. CAJA RESISTEN. | RIGHT SIDE RESIST. BOX | 1 | _ | | | | | | ELIMINADO 04.01.10 |
| 35 | Z276339000 | LATERAL DCHO. CAJA RESISTEN. | RIGHT SIDE RESIST. BOX | 1 | _ | | | | | | INTRODUCIDO 04.01.10 |
| 35 | Z316336000 | LATERAL DCHO. CAJA RESISTEN. | RIGHT SIDE RESIST. BOX | _ | 1 | | | | | | |
| 36 | Z276330000 | POSTERIOR CAJA RESISTENCIA | REAR RESISTOR BOX | 1 | _ | | | | | | ELIMINADO 04.01.10 |
| 36 | Z276337000 | POSTERIOR CAJA RESISTENCIA | REAR RESISTOR BOX | 1 | _ | | | | | | INTRODUCIDO 04.01.10 |
| 36 | Z316320000 | POSTERIOR CAJA RESISTENCIA | REAR RESISTOR BOX | _ | 1 | | | | | | ELIMINADO 04.01.10 |
| 36 | Z316347000 | POSTERIOR CAJA RESISTENCIAS | RESISTOR BOX REAR | _ | 1 | | | | | | INTRODUCIDO 04.01.10 |
| | Q012042000 | TORNILLO EXAGONAL M6X15 A304 | HEXAGONAL BOLT M6x15 A304 | 14 | 14 | | | | | | |
| S/Nº | Z316381000 | CABLEADO SECADO | DRYER WIRING | 1 | 1 | | | | | | |
| S/Nº | Z316382000 | CABLEADO AUXILIAR SECADO | AUX. DRYER WIRING | 1 | _ | | | | | | |
| S/Nº | Z316393000 | CABLEADO AUXILIAR SECADO | AUX. DRYER WIRING | _ | 1 | | | | | | ELIMINADO 15.07.10 |
| S/Nº | Z316353000 | CABLEADO SECADO FI-460 FI-550 | DRYER WIRING FI-460 FI-550 | _ | 1 | | | | | | INTRODUCIDO 15.07.10 |
| S/Nº | Z316353000 | CABLEADO SECADO | DRYER WIRING | _ | 1 | | | | | | |

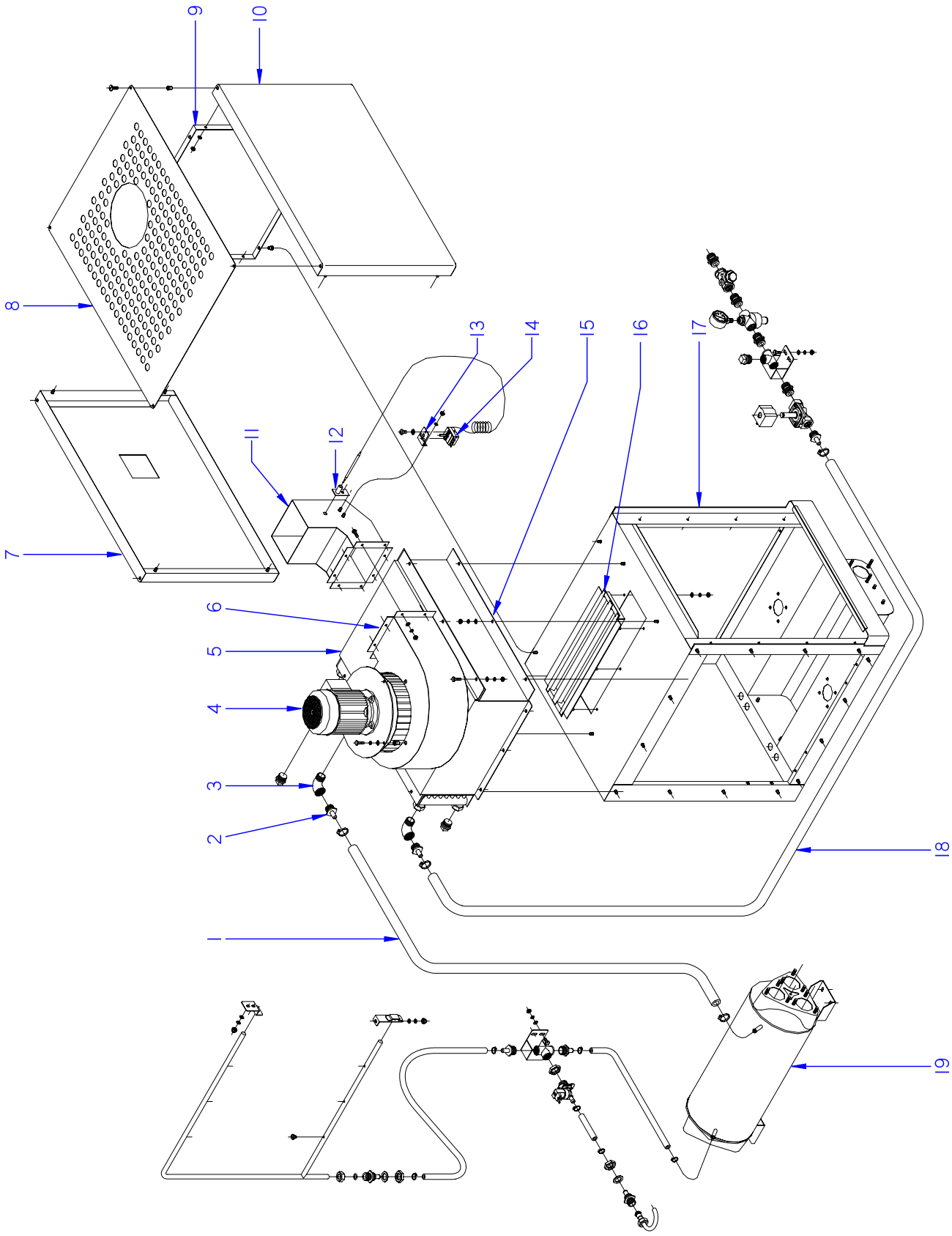


ITEM MARCADO EN COLOR = REPUESTO RECOMENDADO
COLOURED ITEM = RECOMMENDED SPARE PART

| N plano | Firma | Fecha | Aparato | | Lamina | |
|---|---|---|---|---|---|---|
| C-2159 | | 2008-11 | RECUPERADOR DE ENERGIA<br>LAVAVAJILLAS MODULARES | | 20 | Fagor Industrial S.Coop.<br>Onate |

| MOD. | LAVAVAJILLAS MODULARES<br>MODULAR DISHWASHERS | ZONA | RECUPERADOR DE ENERGIA / ENERGY RECOVERY | PLANO | C-2159 |
|---|---|---|---|---|---|

| ITEM | CODIGO | DENOMINACION | TEXTO | RECUERADOR DE ENERGIA | | | | | | | NOTAS |
|---|---|---|---|---|---|---|---|---|---|---|---|
| 1 | 3715300000 | TUBO GOMA 14x24 | RUBBER PIPE 14x24 | 1 | | | | | | | |
| | Q881304000 | ABRAZADERA 20-32 | CLAMP 20-32 | 2 | | | | | | | |
| 2 | Z316419000 | EMPALME 3/4 | CONNECTION 3/4" | 2 | | | | | | | |
| 3 | Z718421000 | CODO M-H 3/4" LATON | L-BEND M-H 3/4" BRASS | 2 | | | | | | | |
| 4 | Z516421000 | VENTILADOR CENTRIFUGO | SPIN FAN | 1 | | | | | | | |
| | Z311103000 | TAPON 3/4" | LID 3/4" | 2 | | | | | | | |
| | Q262040000 | ARANDELA GROW. A6 A304 | WASHER GROW. A6 A304 | 6 | | | | | | | |
| | Q162040000 | TUERCA EXAGONAL M6 | HEXAGONAL NUT M6 | 6 | | | | | | | |
| | Q232040000 | ARANDELA A6 | WASHER A6 | 6 | | | | | | | |
| 5 | Z316411000 | CUBIERTA BATERIA | BATTERY COVER | 1 | | | | | | | |
| | Q232040000 | ARANDELA A6 | WASHER A6 | 7 | | | | | | | |
| | Q262040000 | ARANDELA GROW. A6 A304 | WASHER GROW. A6 A304 | 7 | | | | | | | |
| | Q162040000 | TUERCA EXAGONAL M6 | HEXAGONAL NUT M6 | 7 | | | | | | | |
| | Q221343000 | REMACHE EXAGONAL M6 | HEXAGONAL RIVET M6 | 4 | | | | | | | |
| 6 | Z316456000 | CUBIERTA VENTOLA COMPLETA | COMPLETE VENTOLA COVER | 1 | | | | | | | |
| | Q232040000 | ARANDELA A6 | WASHER A6 | 10 | | | | | | | |
| | Q012042000 | TORNILLO EXAGONAL M6X15 A304 | HEXAGONAL BOLT M6x15 A304 | 10 | | | | | | | |
| | Q262040000 | ARANDELA GROW. A6 A304 | WASHER GROW. A6 A304 | 6 | | | | | | | |
| | Q162040000 | TUERCA EXAGONAL M6 | HEXAGONAL NUT M6 | 6 | | | | | | | |
| 7 | Z316420000 | POSTERIOR CUBIERTA COMPLET. | COMPLETE REAR COVER | 1 | | | | | | | |
| 8 | Z316423000 | TAPA CUBIERTA | COVER LID | 1 | | | | | | | |
| | Q232040000 | ARANDELA A6 | WASHER A6 | 12 | | | | | | | |
| | Q262040000 | ARANDELA GROW. A6 A304 | WASHER GROW. A6 A304 | 12 | | | | | | | |
| | Q162040000 | TUERCA EXAGONAL M6 | HEXAGONAL NUT M6 | 12 | | | | | | | |
| | Q152017000 | TORNILLO AMARRE M6X13 A304 | FASTENING BOLT M6X13 A304 | 8 | | | | | | | |
| 9 | Z316422000 | LATERAL CUBIERTA | SIDE COVER | 2 | | | | | | | |
| 10 | Z316453000 | ANTERIOR CUBIERTA COMPLETA | COMPLETE FRONT COVER | 1 | | | | | | | |
| 11 | Z316413000 | SALIDA AIRE RECUPER. ENERGIA | ENERGY RECOVERY AIR OUTPU | 1 | | | | | | | |
| 12 | Z276331000 | VAINA TS. COMPLETA | COMPLETE TS. SHELL | 1 | | | | | | | |
| | | | | | | | | | | | |
| | | | | | | | | | | | |

| MOD. | LAVAVAJILLAS MODULARES<br>MODULAR DISHWASHERS | ZONA | RECUPERADOR DE ENERGIA / ENERGY RECOVERY | PLANO | C-2159 |
|---|---|---|---|---|---|

| ITEM | CODIGO | DENOMINACION | TEXTO | RECUERADOR DE ENERGIA | | | | | | | NOTAS |
|---|---|---|---|---|---|---|---|---|---|---|---|
| 13 | Z850111000 | SOPORTE TERMOSTATO | THERMOSTAT SUPPORT | 1 | | | | | | | |
| | Q262040000 | ARANDELA GROW. A6 A304 | WASHER GROW. A6 A304 | 2 | | | | | | | |
| | Q162040000 | TUERCA EXAGONAL M6 | HEXAGONAL NUT M6 | 2 | | | | | | | |
| 14 | Z203014000 | TERMOSTATO CALDERIN | WASH DRUM THERMOSTAT | 1 | | | | | | | ELIMINADO 30.11.2012 |
| 14 | 12040858 | TERMOSTATO CALDERIN | WASH DRUM THERMOSTAT | 1 | | | | | | | INTRODUCIDO 30.11.2012 |
| | Q242020000 | ARANDELA ABANICO A4 A.304 | FAN WASHER A4 A.304 | 2 | | | | | | | |
| | Q152024000 | TORNILLO AVELLANADO M4X8 | COUNTERSUNK BOLT M4x8 | 4 | | | | | | | |
| | Q151320000 | TOR. ALOMADO M4X6 H.ZINCADO | CURVED SCREW M4X6 H. ZINC | 2 | | | | | | | |
| 15 | Z316410000 | BATERIA COMPLETA | COMPLETE BATTERY | 1 | | | | | | | |
| 16 | Z316403000 | REJILLA ASPIR.VAHOS COMP. | COMP. STEAM INTAKE GRILLE | 1 | | | | | | | |
| | Q232040000 | ARANDELA A6 | WASHER A6 | 6 | | | | | | | |
| | Q262040000 | ARANDELA GROW. A6 A304 | WASHER GROW. A6 A304 | 6 | | | | | | | |
| | Q162040000 | TUERCA EXAGONAL M6 | HEXAGONAL NUT M6 | 6 | | | | | | | |
| 17 | Z316400000 | CAJA PREACLARADO SOLDADA | WELDED PRERINSE BOX | 1 | | | | | | | |
| | Z316452000 | CABLEADO RECUPERADOR | RECOVERY WIRING | 1 | | | | | | | |
| 18 | 3715300000 | TUBO GOMA 14x24 | RUBBER PIPE 14x24 | 1 | | | | | | | |
| | Q881304000 | ABRAZADERA 20-32 | CLAMP 20-32 | 2 | | | | | | | |
| 19 | Z316426000 | CUERPO COMPLETO | COMPLETE BODY | 1 | | | | | | | |
| S/Nº | Z102305000 | ELECTROVALVULA 032U 2261-00 | SOLENOID 032U 2261-00 | 1 | | | | | | | |
| | | | | | | | | | | | |
| | | | | | | | | | | | |
| | | | | | | | | | | | |
| | | | | | | | | | | | |
| | | | | | | | | | | | |
| | | | | | | | | | | | |
| | | | | | | | | | | | |
| | | | | | | | | | | | |
| | | | | | | | | | | | |
| | | | | | | | | | | | |
| | | | | | | | | | | | |
| | | | | | | | | | | | |

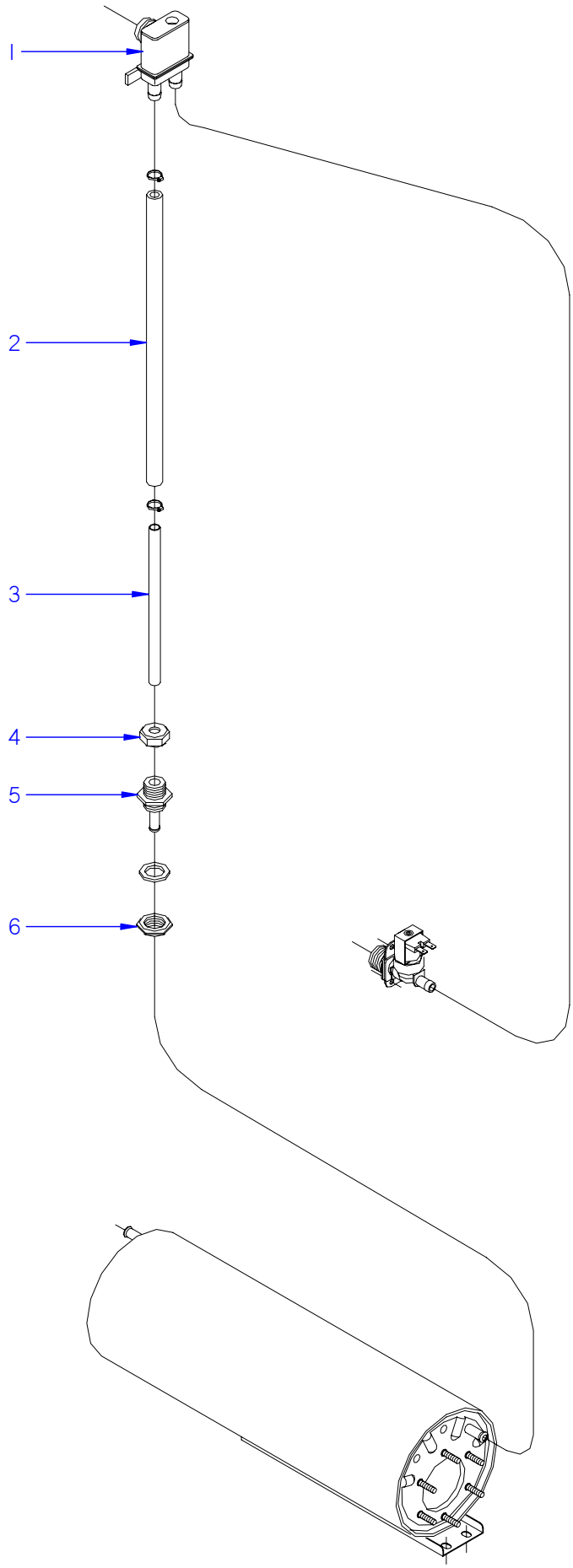


ITEM MARCADO EN COLOR = REPUESTO RECOMENDADO
COLOURED ITEM = RECOMMENDED SPARE PART

| N plano | Firma | Fecha | Aparato | | Lamina | |
|---|---|---|---|---|---|---|
| C-2160 | | 2008-11 | VALVULA ANTIRRETORNO<br>LAVAVAJILLAS MODULARES A.R. | | 21 | Fagor Industrial S.Coop.<br>Oñate |

| MOD. | LAVAVAJILLAS MODULARES<br>MODULAR DISHWASHERS | ZONA | VALVULA ANTIRRETORNO / NON-RETURN VALVE | C-2160 |
|---|---|---|---|---|

| ITEM | CODIGO | DENOMINACION | TEXTO | FI-280 | FI-370 | FI-460 | FI-550 | | | | |
|---|---|---|---|---|---|---|---|---|---|---|---|
| 1 | Z231106000 | VALVULA ANTIRRETORNO | NON-RETURN VALVE | 1 | 1 | 1 | 1 | | | | |
| | Z271111000 | SOPORTE VALVULA A.R.COMPLETO | COMPLETE VALVE SUPPORT A.R | 1 | 1 | 1 | 1 | | | | |
| | Z271110000 | SOPORTE INFERIOR A.R. | LOWER SUPPORT A.R. | 1 | 1 | 1 | 1 | | | | |
| | Z271114000 | CUBIERTA A.R. | COVER A.R. | 1 | 1 | 1 | 1 | | | | |
| 2 | 3676900000 | TUBO GOMA NEGRA D 17*10 | BLACK RUBBER PIPE 17*10 | 2 | 2 | 2 | 2 | | | | |
| | Q881302000 | ABRAZADERA 12-20 | CLAMP 12-20 | 4 | 4 | 4 | 4 | | | | |
| 3 | Z711114000 | TUBO EMPALME | CONNECTION PIPE | 2 | 2 | 2 | 2 | | | | |
| 4 | Q223107000 | TUERCA M.20x2.5 | NUT M.20X2.5 | 2 | 2 | 2 | 2 | | | | |
| 5 | Z711904000 | PASAMUROS ACLARADO | RINSE BUSHING | 2 | 2 | 2 | 2 | | | | |
| | Q307032000 | JUNTA 32X21X3 | JOINT 32X21X3 | 2 | 2 | 2 | 2 | | | | |
| 6 | Q223023000 | TUERCA EXAGONAL 5-8 LATON | HEX NUT 5-8 BRASS | 2 | 2 | 2 | 2 | | | | |

| MOD. | LAVAVAJILLAS MODULARES<br>MODULAR DISHWASHERS | ZONA | PIEZAS ESPEC. PARA LA VERSION SIN NEUTRO<br>SPECIF.PARTS FOR VERSION WITHOUT NEUTRAL | PLANO | |
|---|---|---|---|---|---|

| ITEM | CODIGO | DENOMINACION | TEXTO | FI-160 | FI-200 | | | | | | NOTAS |
|---|---|---|---|---|---|---|---|---|---|---|---|
| | Z273039000 | CONDENSADOR 10MF 550V | CONDENSER 10MF 550V | 2 | 2 | | | | | | |
| | Z273038000 | CABLEADO TRANSF. SIN NEUTRO | TRANSF. WIRING W/O NEUTRAL | 1 | 1 | | | | | | |
| | P503059000 | TRANSFORMADOR 440V.S.N. | TRANSFORMER 440V.S.N. | 1 | 1 | | | | | | |

| MOD. | LAVAVAJILLAS MODULARES<br>MODULAR DISHWASHERS | ZONA | PIEZAS A ELIMINAR E INTRODUCIR VERSION H''<br>PARTS TO BE ELIMINATED AND INTRODUCED | PLANO | |
|---|---|---|---|---|---|

| ITEM | CODIGO | DENOMINACION | TEXTO | FI-200 | FI-200 H | ECO-200 | ECO-200 H | | | | NOTAS |
|---|---|---|---|---|---|---|---|---|---|---|---|
| | | **PIEZAS A ELIMINAR** | **PARTS TO BE REMOVED** | | | | | | | | |
| 10 | Z105013000 | PIÑON | PINION | 1 | _ | 1 | _ | | | | PLANO C-2123 |
| 12 | Z121741000 | RESISTENCIA 9600 230V. | RESISTOR 9600 230V | 1 | _ | _ | _ | | | | PLANO C-2125 |
| | | | | | | | | | | | |
| | | | | | | | | | | | |
| | | | | | | | | | | | |
| | | | | | | | | | | | |
| | | | | | | | | | | | |
| | | | | | | | | | | | |
| | | | | | | | | | | | |
| | | | | | | | | | | | |
| | | | | | | | | | | | |
| | | | | | | | | | | | |
| | | **PIEZAS A INTRODUCIR** | **PARTS TO BE INCLUDED** | | | | | | | | |
| 10 | Z275007000 | PIÑON | PINION | _ | 1 | _ | 1 | | | | PLANO C-2123 |
| 12 | Z129502000 | RESISTENCIA 220-240 V. | RESISTOR 220-240 V. | _ | 1 | _ | _ | | | | PLANO C-2125 |
| | | | | | | | | | | | |
| | | | | | | | | | | | |
| | | | | | | | | | | | |
| | | | | | | | | | | | |
| | | | | | | | | | | | |
| | | | | | | | | | | | |
| | | | | | | | | | | | |
| | | | | | | | | | | | |
| | | | | | | | | | | | |
| | | | | | | | | | | | |
| | | | | | | | | | | | |
| | | | | | | | | | | | |
| | | | | | | | | | | | |
| | | | | | | | | | | | |
| | | | | | | | | | | | |

| MOD. | LAVAVAJILLAS MODULARES<br>MODULAR DISHWASHERS | ZONA | VARIOS / VARIOUS | PLANO | |
|---|---|---|---|---|---|

| ITEM | CODIGO | DENOMINACION | TEXTO | FI-280 | FI-370 | FI-460 | FI-550 | | | | |
|---|---|---|---|---|---|---|---|---|---|---|---|
| | Z316102000 | FOLLETO INSTRUCCIONES | INSTRUCTION LEAFLET. | 1 | 1 | 1 | 1 | | | | |
| | Z313074000 | ESQUEMA TEÓRICO 280 | THEORET. DIAGRAM 280 | 1 | _ | _ | _ | | | | ELIMINADO 18.05.2012 |
| | Z333041000 | ESQUEMA TEÓRICO 370 | THEORET. DIAGRAM 370 | _ | 1 | _ | _ | | | | ELIMINADO 18.05.2012 |
| | Z353042000 | ESQUEMA TEÓRICO 460 | THEORET. DIAGRAM 460 | _ | _ | 1 | _ | | | | ELIMINADO 18.05.2012 |
| | Z373043000 | ESQUEMA TEÓRICO 550 | THEORET. DIAGRAM 550 | 1 | 1 | 1 | | | | | INTRODUCIDO 18.05.2012 |
| | Z373043000 | ESQUEMA TEÓRICO 550 | THEORET. DIAGRAM 550 | _ | _ | _ | 1 | | | | PLANO HC-17416 |
| | Z313072000 | ESQUEMA MONTAJE IZDO | LEFT ASSEMBLY DIAGRAM | 1 | 1 | 1 | 1 | | | | PLANO HE-15487 |
| | Z313073000 | ESQUEMA MONTAJE DCHO | RIGHT ASSEMBLY DIAGRAM | 1 | 1 | 1 | 1 | | | | PLANO HE-15488 |
| | Z313070000 | LEYENDA ESQUE.TEOR.COMP.MODU | LEGEND COMP. MODUL. THEOR. | 1 | 1 | 1 | 1 | | | | PLANO HC-17259 |
| | Z313071000 | INSTAL. ELECTR. BASE MODULAR | MODULAR BASE ELEC. INSTALL. | 1 | 1 | 1 | 1 | | | | |
| | Z333040000 | CABLEADO FI-370 | WIRING FI-370 | _ | 1 | _ | _ | | | | |
| | Z353041000 | CABLEADO FI-460 | WIRING FI-460 | _ | _ | 1 | _ | | | | |
| | Z373042000 | CABLEADO FI-550 | WIRING FI-550 | _ | _ | _ | 1 | | | | |
| | Z313062000 | CABLEADO FUERZA BASE | BASE POWER WIRING | 1 | 1 | 1 | 1 | | | | |
| | Z313063000 | CABLEADO CALDERIN ELECTR. | ELECTR. BOILER WIRING | 1 | 1 | 1 | 1 | | | | |
| | Z283022000 | CABLE TIERRA M.BOMBA | EARTH WIRE M. PUMP | 1 | 1 | 1 | 1 | | | | |
| | Z273016000 | MICRO FIN DE CARRERA | LIMIT SWITCH MICRO | 1 | 1 | 1 | 1 | | | | |
| | Z273085000 | CABLEADO SECCIONADOR 125A | SECTIONATOR 125A WIRING | 1 | 1 | 1 | _ | | | | INTRODUCIDO 01.12.09 |
| | Z273086000 | CABLEADO SECCIONADOR 160A | SECTIONATOR 160A WIRING | _ | _ | _ | 1 | | | | INTRODUCIDO 04.01.10 |
| | | | | | | | | | | | |
| | | | | | | | | | | | |
| | | | | | | | | | | | |
| | | | | | | | | | | | |
| | | | | | | | | | | | |
| | | | | | | | | | | | |
| | | | | | | | | | | | |
| | | | | | | | | | | | |
| | | | | | | | | | | | |
| | | | | | | | | | | | |
| | | | | | | | | | | | |
| | | | | | | | | | | | |

| MOD. | LAVAVAJILLAS MODULARES<br>MODULAR DISHWASHERS | ZONA | VARIOS / VARIOUS | PLANO | |
|---|---|---|---|---|---|

| ITEM | CODIGO | DENOMINACION | TEXTO | ECO-280 | ECO-370 | ECO-460 | ECO-550 | | | | |
|---|---|---|---|---|---|---|---|---|---|---|---|
| | Z326102000 | FOLLETO INSTRUCCIONES | INSTRUCTION LEAFLET. | 1 | 1 | 1 | 1 | | | | |
| | Z323020000 | ESQUEMA TEÓRICO ECO 280 | THEORET. DIAGRAM ECO 280 | 1 | _ | _ | _ | | | | ELIMINADO 18.05.2012 |
| | Z343021000 | ESQUEMA TEÓRICO ECO 370 | THEORET. DIAGRAM ECO 370 | _ | 1 | _ | _ | | | | ELIMINADO 18.05.2012 |
| | Z363020000 | ESQUEMA TEÓRICO ECO 460 | THEORET. DIAGRAM ECO 460 | _ | _ | 1 | _ | | | | ELIMINADO 18.05.2012 |
| | Z383023000 | ESQUEMA TEÓRICO ECO 550 | THEORET. DIAGRAM ECO 550 | _ | _ | _ | 1 | | | | ELIMINADO 18.05.2012 |
| | Z373043000 | ESQUEMA TEÓRICO 550 | THEORET. DIAGRAM 550 | 1 | 1 | 1 | 1 | | | | INTRODUCIDO 18.05.2012 |
| | Z313072000 | ESQUEMA MONTAJE IZDO | LEFT ASSEMBLY DIAGRAM | 1 | 1 | 1 | 1 | | | | PLANO HE-15487 |
| | Z313073000 | ESQUEMA MONTAJE DCHO | RIGHT ASSEMBLY DIAGRAM | 1 | 1 | 1 | 1 | | | | PLANO HE-15488 |
| | Z313070000 | LEYENDA ESQUE.TEOR.COMP.MOD | LEGEND COMP. MODUL. THEOR | 1 | 1 | 1 | 1 | | | | PLANO HC-17259 |
| | Z313071000 | INSTAL. ELECTR. BASE MODULAR | MODULAR BASE ELEC. INSTALL. | 1 | 1 | 1 | 1 | | | | |
| | Z333040000 | CABLEADO FI-370 | WIRING FI-370 | _ | 1 | _ | _ | | | | |
| | Z353041000 | CABLEADO FI-460 | WIRING FI-460 | _ | _ | 1 | _ | | | | |
| | Z373042000 | CABLEADO FI-550 | WIRING FI-550 | _ | _ | _ | 1 | | | | |
| | Z313062000 | CABLEADO FUERZA BASE | BASE POWER WIRING | 1 | 1 | 1 | 1 | | | | |
| | Z323001000 | CABLEADO ECO | ECO WIRING | 1 | 1 | 1 | 1 | | | | |
| | Z283022000 | CABLE TIERRA M.BOMBA | EARTH WIRE M. PUMP | 1 | 1 | 1 | 1 | | | | |
| | Z273016000 | MICRO FIN DE CARRERA | LIMIT SWITCH MICRO | 1 | 1 | 1 | 1 | | | | |
| | Z273084000 | CABLEADO SECCIONADOR 63A | SECTIONATOR 63A WIRING | 1 | 1 | _ | _ | | | | INTRODUCIDO 01.12.09 |
| | Z273085000 | CABLEADO SECCIONADOR 125A | SECTIONATOR 125A WIRING | _ | _ | 1 | 1 | | | | INTRODUCIDO 01.12.09 |
| | | | | | | | | | | | |
| | | | | | | | | | | | |
| | | | | | | | | | | | |
| | | | | | | | | | | | |
| | | | | | | | | | | | |
| | | | | | | | | | | | |
| | | | | | | | | | | | |
| | | | | | | | | | | | |
| | | | | | | | | | | | |
| | | | | | | | | | | | |
| | | | | | | | | | | | |
| | | | | | | | | | | | |

| MOD. | LAVAVAJILLAS MODULARES<br>MODULAR DISHWASHERS | ZONA | PIEZAS A INTRODUCIR EN LA VERSION 220 V.<br>PARTS A INTRODUCED IN VERSION 220 V. | PLANO | |
|---|---|---|---|---|---|

| ITEM | CODIGO | DENOMINACION | TEXTO | FI-280 | FI-370 | FI-460 | FI-550 | | | | NOTAS |
|---|---|---|---|---|---|---|---|---|---|---|---|
| | | **PIEZAS A INTRODUCIR EN LA VERSION 220 V.** | | | | | | | | | |
| 15 | Z513081000 | SECCIONAD. 4P. 160A SIEMENS | SECTIONAT. 4P.160A SIEMENS | 1 | _ | _ | _ | | | | INTRODUCIDO 04.01.10 |
| 15 | Z513082000 | SECCIONAD. 4P. 250A SIEMENS | SECTIONAT. 4P.250A SIEMENS | _ | 1 | 1 | 1 | | | | INTRODUCIDO 04.01.10 |
| S/Nº | Z513083000 | BORNE DISTRIBUIDOR 70 MM2 | DISTRIBUI. 70 MM2 TERMINAL | 1 | _ | _ | _ | | | | INTRODUCIDO 04.01.10 |
| S/Nº | Z513084000 | BORNE DISTRIBUIDOR 120 MM2 | DISTRIBUI. 120 MM2 TERMINAL | _ | 3 | 3 | 3 | | | | ELIMINADO 09.07.10 |
| S/Nº | Z513085000 | BORNA DIST. 400A 185mm2 1vía UL | DISTRIBUI. 400A 185mm2 1vía UL | _ | 3 | 3 | 3 | | | | INTRODUCIDO 09.07.10 |
| | Z273086000 | CABLEADO SECCIONADOR 160A | SECTIONATOR 160A WIRING | 1 | _ | _ | _ | | | | INTRODUCIDO 04.01.10 |
| | Z273087000 | CABLEADO SECCIONADOR 250A | SECTIONATOR 2560A WIRING | _ | 1 | 1 | 1 | | | | INTRODUCIDO 04.01.10 |

| MOD. | LAVAVAJILLAS MODULARES<br>MODULAR DISHWASHERS | ZONA | PIEZAS A INTRODUCIR EN LA VERSION 220 V.<br>PARTS A INTRODUCED IN VERSION 220 V. | PLANO | |
|---|---|---|---|---|---|

| ITEM | CODIGO | DENOMINACION | TEXTO | ECO-280 | ECO-370 | ECO-460 | ECO-550 | | | | NOTAS |
|---|---|---|---|---|---|---|---|---|---|---|---|
| | | **PIEZAS A INTRODUCIR EN LA VERSION 220 V.** | | | | | | | | | |
| 15 | P663014000 | SECCIONADOR 3P.125A SIEMENS | SECTIONATOR 3P.125A SIEMENS | 1 | 1 | 1 | _ | | | | INTRODUCIDO 04.01.10 |
| 15 | Z513081000 | SECCIONAD. 4P. 160A SIEMENS | SECTIONAT. 4P.160A SIEMENS | _ | _ | _ | 1 | | | | INTRODUCIDO 04.01.10 |
| S/Nº | Z513083000 | BORNE DISTRIBUIDOR 70 MM2 | DISTRIBUI. 70 MM2 TERMINAL | 1 | 1 | 1 | 1 | | | | INTRODUCIDO 04.01.10 |
| S/Nº | P663015000 | BLOQUE 4º P. SECCIONAD. 125A S. | SECTION. 125A 4º POLO SIEMEN | 1 | 1 | 1 | _ | | | | INTRODUCIDO 04.01.10 |
| | Z273085000 | CABLEADO SECCIONADOR 125A | SECTIONATOR 125A WIRING | 1 | 1 | 1 | _ | | | | INTRODUCIDO 01.12.09 |
| | Z273086000 | CABLEADO SECCIONADOR 160A | SECTIONATOR 160A WIRING | _ | _ | _ | 1 | | | | INTRODUCIDO 01.12.09 |

# FI - 280

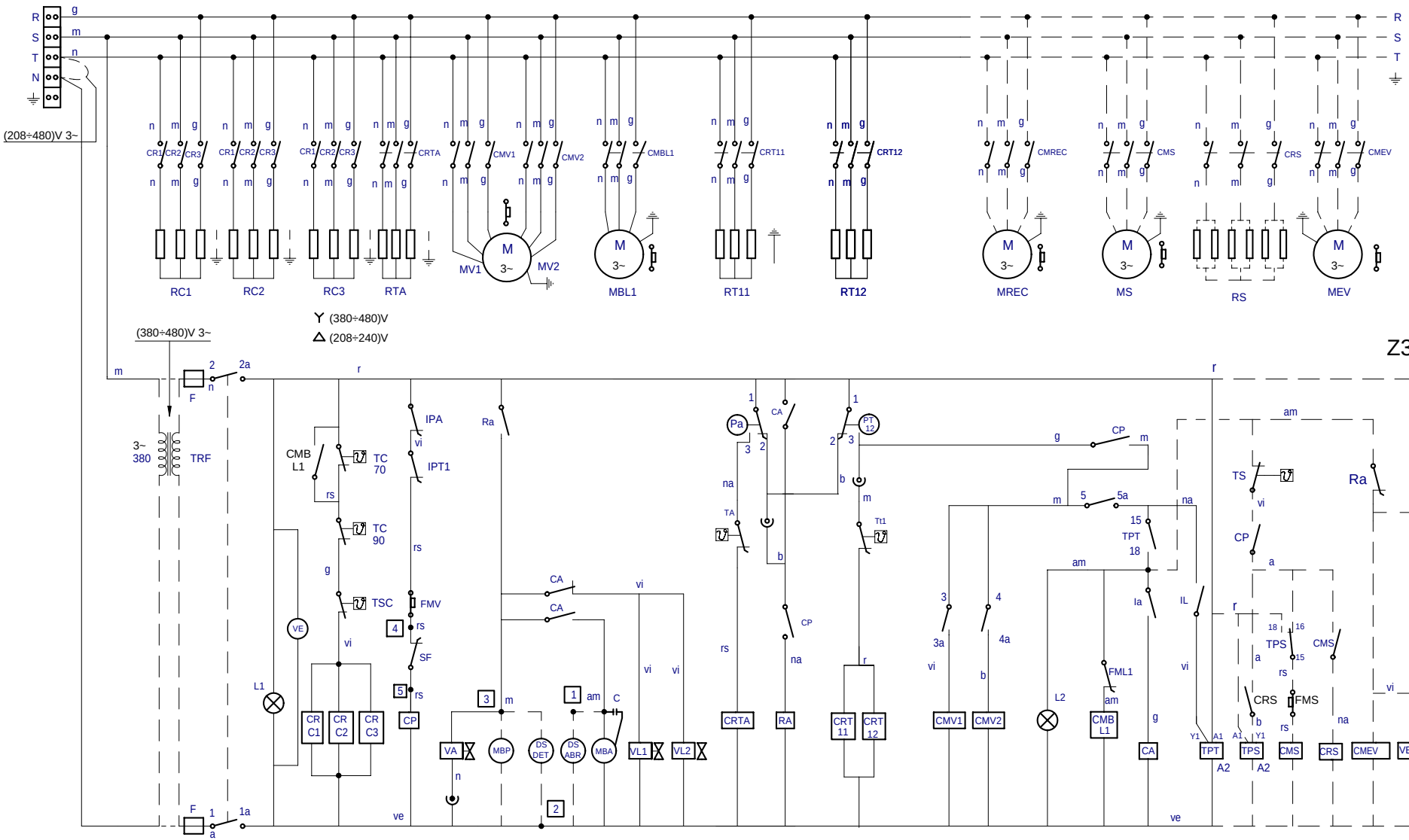


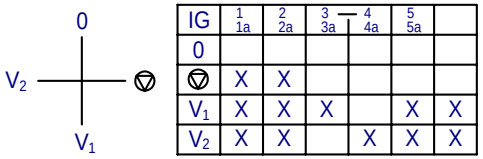


| IG | 1 1a | 2 2a | 3 3a | 4 4a | 5 5a | |
|---|---|---|---|---|---|---|
| 0 | | | | | | |
| ▽ | X | X | | | | |
| V1 | X | X | X | | X | X |
| V2 | X | X | | X | X | X |

| COLOR | | ESPAÑOL | FRANÇAIS | ENGLISH | DEUTSCH | ITALIANO |
|---|---|---|---|---|---|---|
| | | *COLOR* | *COULEUR* | *COLOUR* | *FARBEN* | *COLORE* |
| a | = | Azul | Bleu | Blue | Blau | Blu |
| am | = | Amarillo | Jaune | Yellow | Gelb | Giallo |
| am/ve | = | Amarillo/verde | Jaune / vert | Yellow / green | Gelb/grün | Giallo/verde |
| b | = | Blanco | Blanc | White | Weiß | Bianco |
| g | = | Gris | Gris | Grey | Grau | Grigio |
| m | = | Marrón | Marron | Brown | Braun | Marrone |

| COLOR | | ESPAÑOL | FRANÇAIS | ENGLISH | DEUTSCH | ITALIANO |
|---|---|---|---|---|---|---|
| | | *COLOR* | *COULEUR* | *COLOUR* | *FARBEN* | *COLORE* |
| n | = | Negro | Noir | Black | Schwarz | Nero |
| na | = | Naranja | Orange | Orange | Orange | Arancio |
| r | = | Rojo | Rouge | Red | Rot | Rosso |
| rs | = | Rosa | Rose | Pink | Rosa | Roseo |
| ve | = | Verde | Vert | Green | Grün | Verde |
| vi | = | Violeta | Violet | Purple | Violett | Viola |

# ECO-280

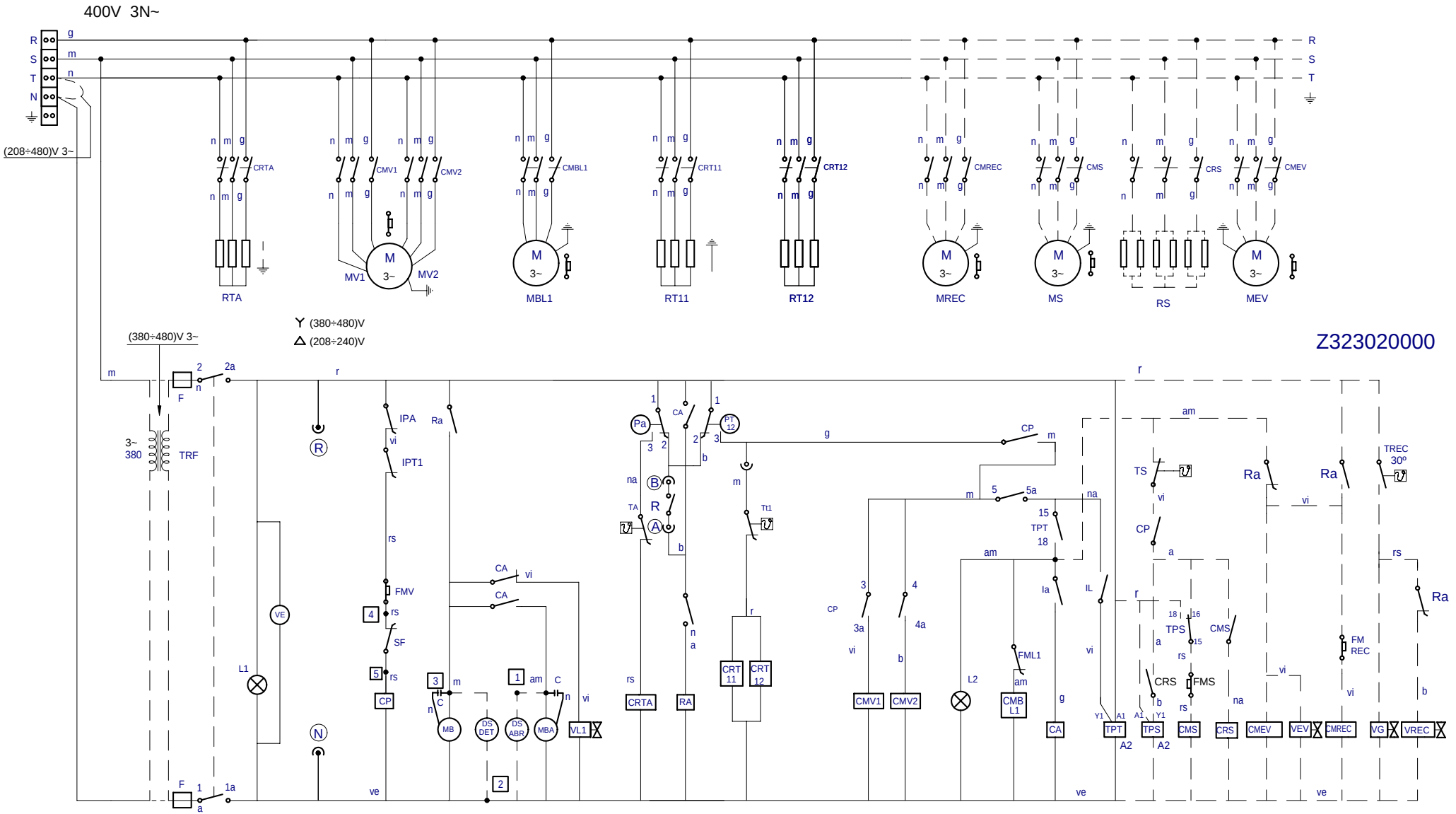


| IG | 1 1a | 2 2a | 3 3a | 4 4a | 5 5a | |
|---|---|---|---|---|---|---|
| 0 | | | | | | |
| ▽ | X | X | | | | |
| $V_1$ | X | X | X | | X | X |
| $V_2$ | X | X | | X | X | X |

| COLOR | | ESPAÑOL | FRANÇAIS | ENGLISH | DEUTSCH | ITALIANO |
|---|---|---|---|---|---|---|
| | | *COLOR* | *COULEUR* | *COLOUR* | *FARBEN* | *COLORE* |
| a | = | Azul | Bleu | Blue | Blau | Blu |
| am | = | Amarillo | Jaune | Yellow | Gelb | Giallo |
| am/ve | = | Amarillo/verde | Jaune / vert | Yellow / green | Gelb/grün | Giallo/verde |
| b | = | Blanco | Blanc | White | Weiß | Bianco |
| g | = | Gris | Gris | Grey | Grau | Grigio |
| m | = | Marrón | Marron | Brown | Braun | Marrone |

| COLOR | | ESPAÑOL | FRANÇAIS | ENGLISH | DEUTSCH | ITALIANO |
|---|---|---|---|---|---|---|
| | | *COLOR* | *COULEUR* | *COLOUR* | *FARBEN* | *COLORE* |
| n | = | Negro | Noir | Black | Schwarz | Nero |
| na | = | Naranja | Orange | Orange | Orange | Arancio |
| r | = | Rojo | Rouge | Red | Rot | Rosso |
| rs | = | Rosa | Rose | Pink | Rosa | Roseo |
| ve | = | Verde | Vert | Green | Grün | Verde |
| vi | = | Violeta | Violet | Purple | Violett | Viola |

HC-17411-1

# FI-370

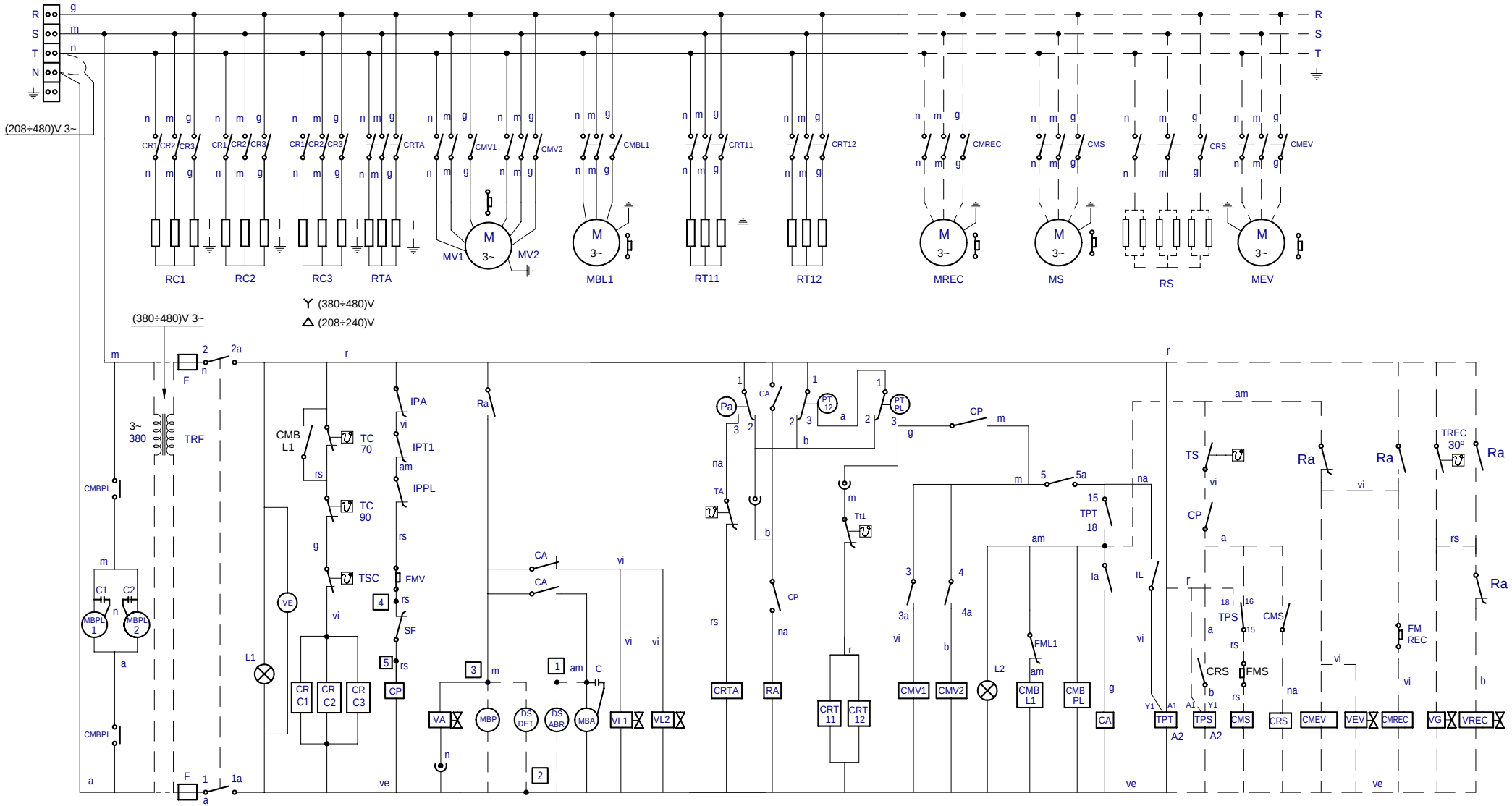


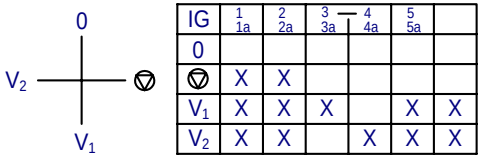


| IG | 1 1a | 2 2a | 3 3a | 4 4a | 5 5a | |
|---|---|---|---|---|---|---|
| 0 | | | | | | |
| ▽ | X | X | | | | |
| V1 | X | X | X | | X | X |
| V2 | X | X | | X | X | X |

| COLOR | | ESPAÑOL | FRANÇAIS | ENGLISH | DEUTSCH | ITALIANO |
|---|---|---|---|---|---|---|
| | | *COLOR* | *COULEUR* | *COLOUR* | *FARBEN* | *COLORE* |
| a | = | Azul | Bleu | Blue | Blau | Blu |
| am | = | Amarillo | Jaune | Yellow | Gelb | Giallo |
| am/ve | = | Amarillo/verde | Jaune / vert | Yellow / green | Gelb/grün | Giallo/verde |
| b | = | Blanco | Blanc | White | Weiß | Bianco |
| g | = | Gris | Gris | Grey | Grau | Grigio |
| m | = | Marrón | Marron | Brown | Braun | Marrone |

| COLOR | | ESPAÑOL | FRANÇAIS | ENGLISH | DEUTSCH | ITALIANO |
|---|---|---|---|---|---|---|
| | | *COLOR* | *COULEUR* | *COLOUR* | *FARBEN* | *COLORE* |
| n | = | Negro | Noir | Black | Schwarz | Nero |
| na | = | Naranja | Orange | Orange | Orange | Arancio |
| r | = | Rojo | Rouge | Red | Rot | Rosso |
| rs | = | Rosa | Rose | Pink | Rosa | Roseo |
| ve | = | Verde | Vert | Green | Grün | Verde |
| vi | = | Violeta | Violet | Purple | Violett | Viola |

Z333041000

# ECO-370

400V 3N~

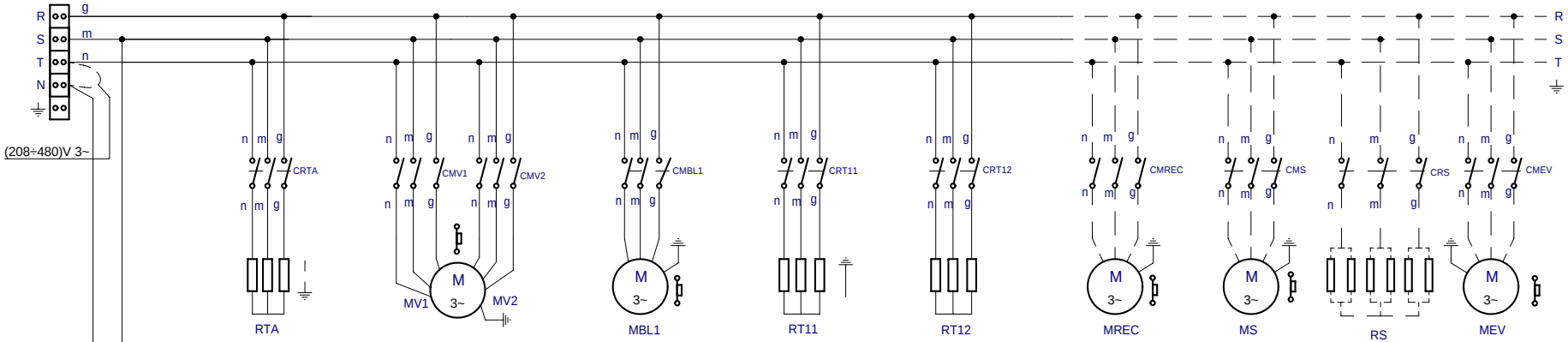


Y (380÷480)V
Δ (208÷240)V

Z343021000

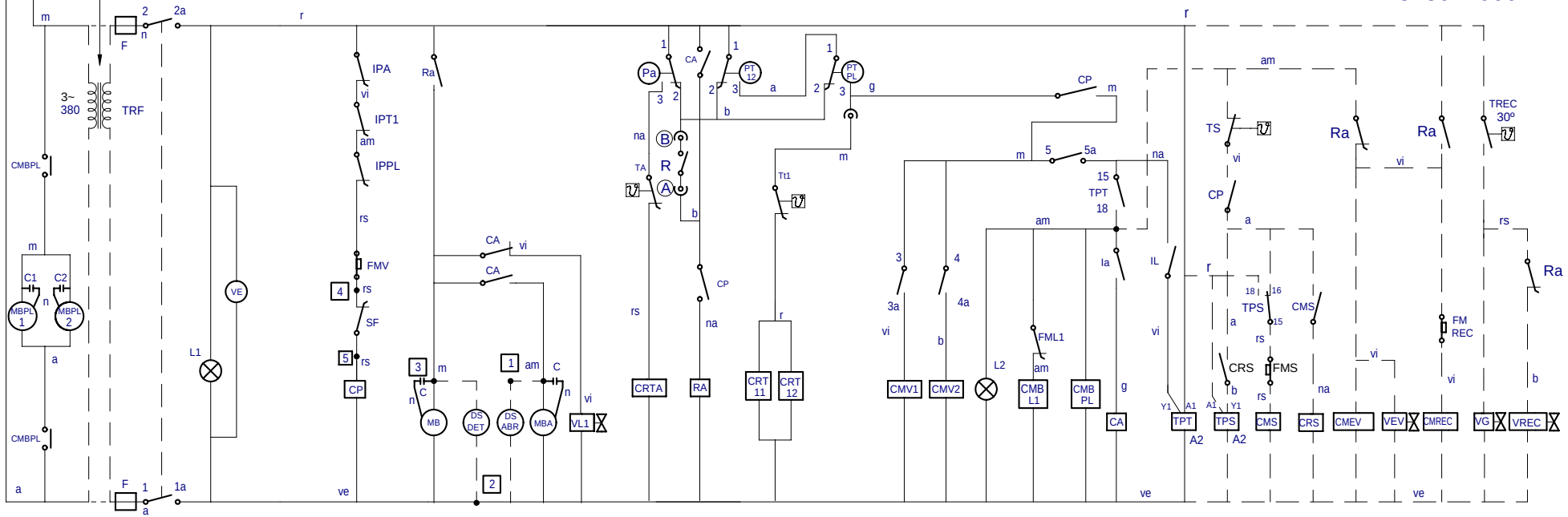


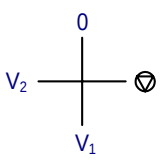


| IG | 1 1a | 2 2a | 3 3a | 4 4a | 5 5a | |
|---|---|---|---|---|---|---|
| 0 | | | | | | |
| ▽ | X | X | | | | |
| V1 | X | X | X | | X | X |
| V2 | X | X | | X | X | X |

| COLOR | | ESPAÑOL | FRANÇAIS | ENGLISH | DEUTSCH | ITALIANO |
|---|---|---|---|---|---|---|
| | | *COLOR* | *COULEUR* | *COLOUR* | *FARBEN* | *COLORE* |
| a | = | Azul | Bleu | Blue | Blau | Blu |
| am | = | Amarillo | Jaune | Yellow | Gelb | Giallo |
| am/ve | = | Amarillo/verde | Jaune / vert | Yellow / green | Gelb/grün | Giallo/verde |
| b | = | Blanco | Blanc | White | Weiß | Bianco |
| g | = | Gris | Gris | Grey | Grau | Grigio |
| m | = | Marrón | Marron | Brown | Braun | Marrone |

| COLOR | | ESPAÑOL | FRANÇAIS | ENGLISH | DEUTSCH | ITALIANO |
|---|---|---|---|---|---|---|
| | | *COLOR* | *COULEUR* | *COLOUR* | *FARBEN* | *COLORE* |
| n | = | Negro | Noir | Black | Schwarz | Nero |
| na | = | Naranja | Orange | Orange | Orange | Arancio |
| r | = | Rojo | Rouge | Red | Rot | Rosso |
| rs | = | Rosa | Rose | Pink | Rosa | Roseo |
| ve | = | Verde | Vert | Green | Grün | Verde |
| vi | = | Violeta | Violet | Purple | Violett | Viola |

HC-17413 -01

# FI - 460

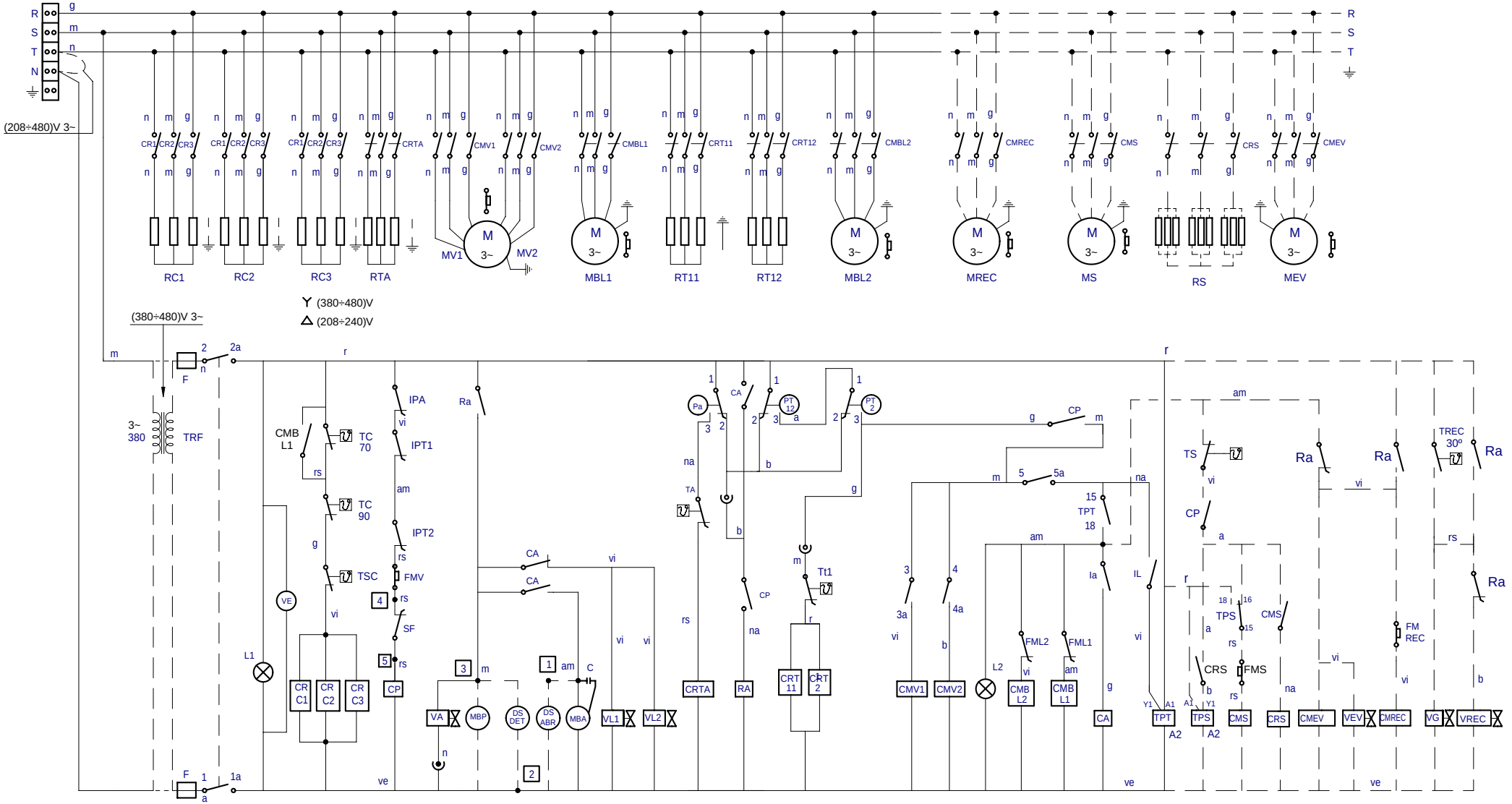


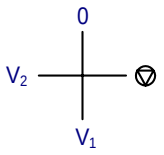


| IG | 1 1a | 2 2a | 3 3a | 4 4a | 5 5a | |
|---|---|---|---|---|---|---|
| 0 | | | | | | |
| ▽ | X | X | | | | |
| V1 | X | X | X | | X | X |
| V2 | X | X | | X | X | X |

| COLOR | | ESPAÑOL | FRANÇAIS | ENGLISH | DEUTSCH | ITALIANO |
|---|---|---|---|---|---|---|
| | | *COLOR* | *COULEUR* | *COLOUR* | *FARBEN* | *COLORE* |
| a | = | Azul | Bleu | Blue | Blau | Blu |
| am | = | Amarillo | Jaune | Yellow | Gelb | Giallo |
| am/ve | = | Amarillo/verde | Jaune / vert | Yellow / green | Gelb/grün | Giallo/verde |
| b | = | Blanco | Blanc | White | Weiß | Bianco |
| g | = | Gris | Gris | Grey | Grau | Grigio |
| m | = | Marrón | Marron | Brown | Braun | Marrone |

| COLOR | | ESPAÑOL | FRANÇAIS | ENGLISH | DEUTSCH | ITALIANO |
|---|---|---|---|---|---|---|
| | | *COLOR* | *COULEUR* | *COLOUR* | *FARBEN* | *COLORE* |
| n | = | Negro | Noir | Black | Schwarz | Nero |
| na | = | Naranja | Orange | Orange | Orange | Arancio |
| r | = | Rojo | Rouge | Red | Rot | Rosso |
| rs | = | Rosa | Rose | Pink | Rosa | Roseo |
| ve | = | Verde | Vert | Green | Grün | Verde |
| vi | = | Violeta | Violet | Purple | Violett | Viola |

Z353042000

# ECO-460

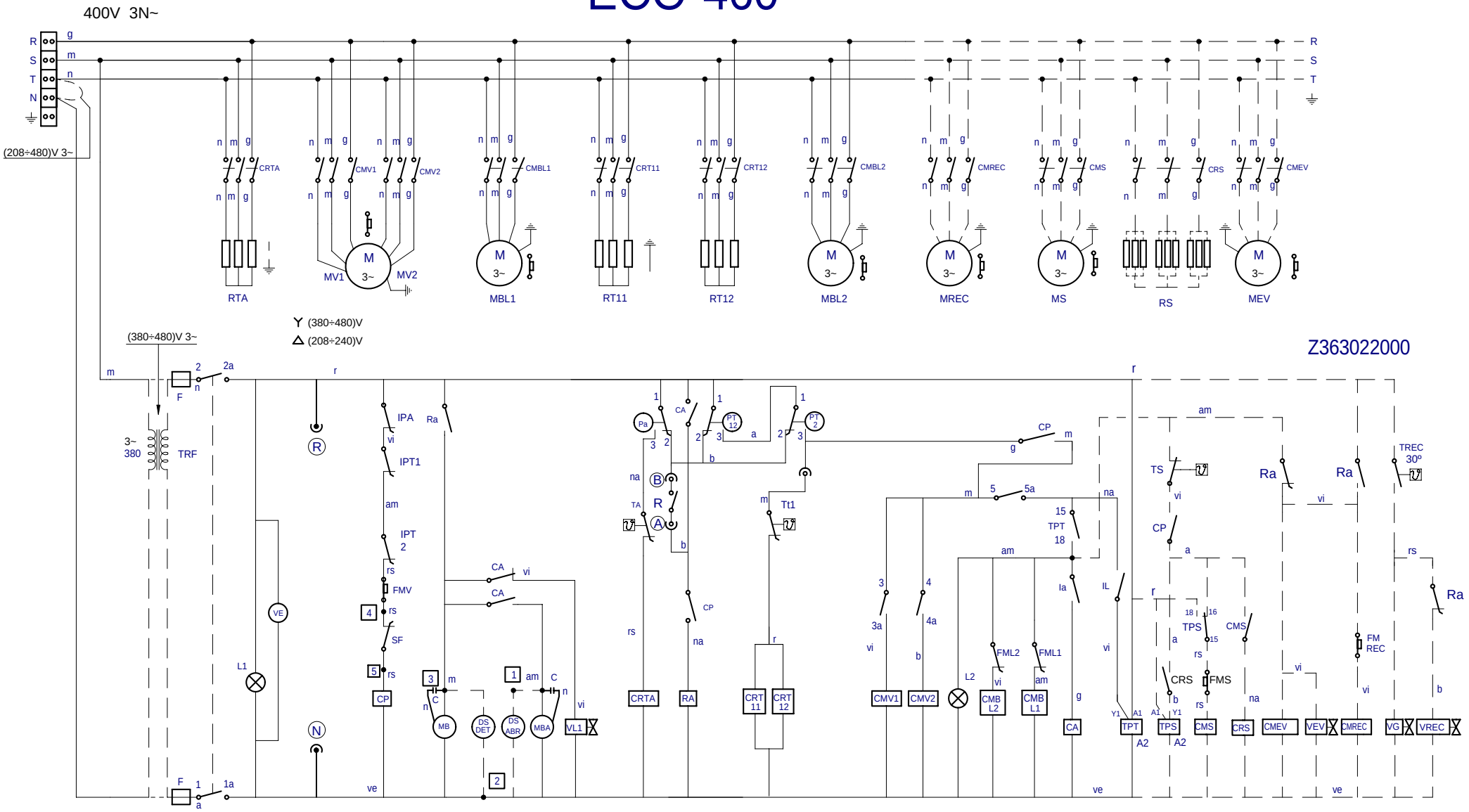


| IG | 1 1a | 2 2a | 3 3a | 4 4a | 5 5a | |
|---|---|---|---|---|---|---|
| 0 | | | | | | |
| ▽ | X | X | | | | |
| $V_1$ | X | X | X | | X | X |
| $V_2$ | X | X | | X | X | X |

0, $V_2$, ▽, $V_1$

| COLOR | | ESPAÑOL | FRANÇAIS | ENGLISH | DEUTSCH | ITALIANO |
|---|---|---|---|---|---|---|
| | | *COLOR* | *COULEUR* | *COLOUR* | *FARBEN* | *COLORE* |
| a | = | Azul | Bleu | Blue | Blau | Blu |
| am | = | Amarillo | Jaune | Yellow | Gelb | Giallo |
| am/ve | = | Amarillo/verde | Jaune / vert | Yellow / green | Gelb/grün | Giallo/verde |
| b | = | Blanco | Blanc | White | Weiß | Bianco |
| g | = | Gris | Gris | Grey | Grau | Grigio |
| m | = | Marrón | Marron | Brown | Braun | Marrone |

| COLOR | | ESPAÑOL | FRANÇAIS | ENGLISH | DEUTSCH | ITALIANO |
|---|---|---|---|---|---|---|
| | | *COLOR* | *COULEUR* | *COLOUR* | *FARBEN* | *COLORE* |
| n | = | Negro | Noir | Black | Schwarz | Nero |
| na | = | Naranja | Orange | Orange | Orange | Arancio |
| r | = | Rojo | Rouge | Red | Rot | Rosso |
| rs | = | Rosa | Rose | Pink | Rosa | Roseo |
| ve | = | Verde | Vert | Green | Grün | Verde |
| vi | = | Violeta | Violet | Purple | Violett | Viola |

HC-17415-01

400V 3N~ FI 280, FI 370, FI 460, FI 550 ECO 280, ECO 370, ECO 460, ECO 550

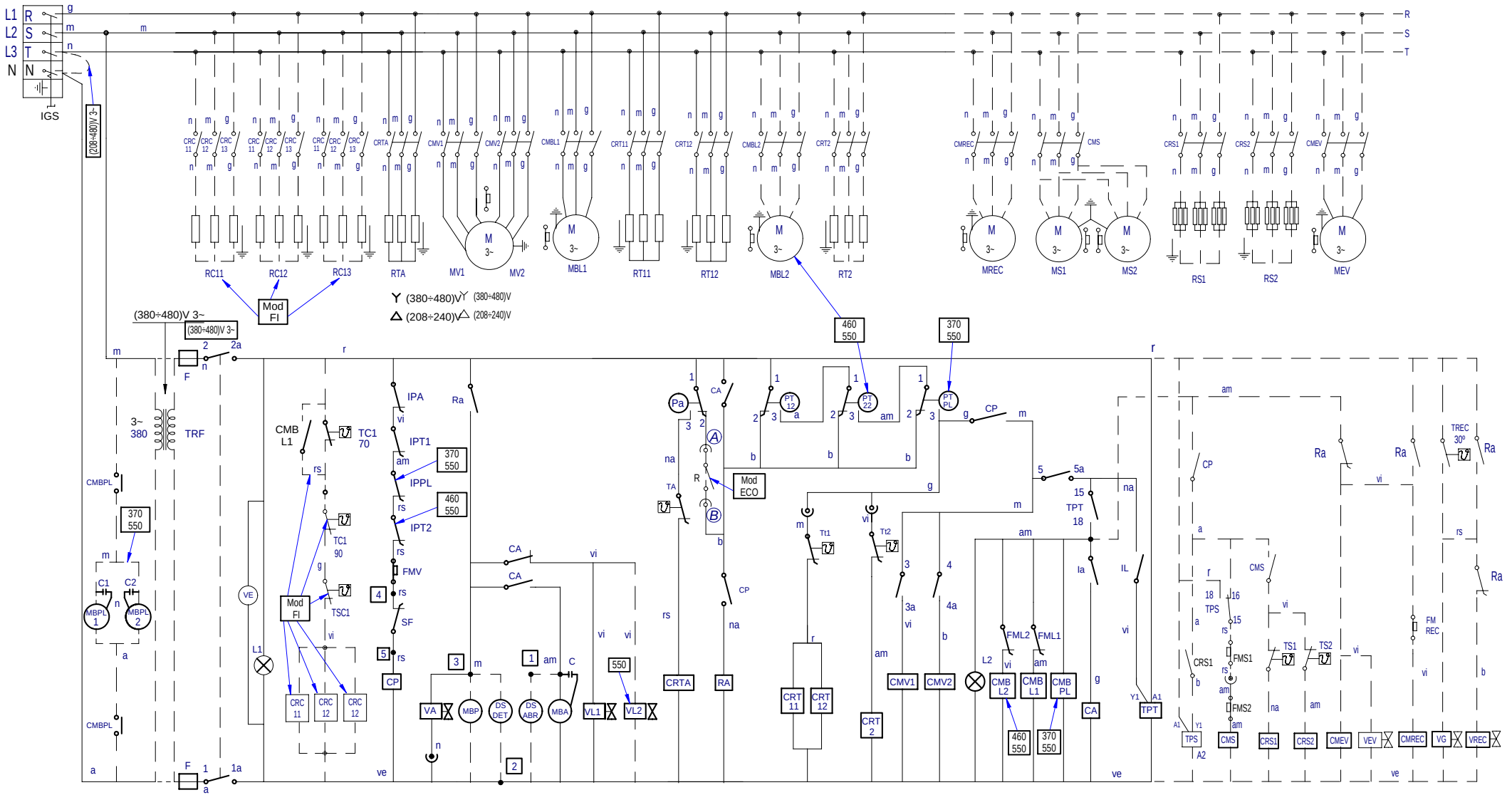


| IG | 1 1a | 2 2a | 3 3a | 4 4a | 5 5a | |
|---|---|---|---|---|---|---|
| 0 | | | | | | |
| ▽ | X | X | | | | |
| $V_1$ | X | X | X | | X | X |
| $V_2$ | X | X | | X | X | X |

| COLOR | | ESPAÑOL | FRANÇAIS | ENGLISH | DEUTSCH | ITALIANO |
|---|---|---|---|---|---|---|
| | | *COLOR* | *COULEUR* | *COLOUR* | *FARBEN* | *COLORE* |
| a | = | Azul | Bleu | Blue | Blau | Blu |
| am | = | Amarillo | Jaune | Yellow | Gelb | Giallo |
| am/ve | = | Amarillo/verde | Jaune / vert | Yellow / green | Gelb/grün | Giallo/verde |
| b | = | Blanco | Blanc | White | Weiß | Bianco |
| g | = | Gris | Gris | Grey | Grau | Grigio |
| m | = | Marrón | Marron | Brown | Braun | Marrone |

| COLOR | | ESPAÑOL | FRANÇAIS | ENGLISH | DEUTSCH | ITALIANO |
|---|---|---|---|---|---|---|
| | | *COLOR* | *COULEUR* | *COLOUR* | *FARBEN* | *COLORE* |
| n | = | Negro | Noir | Black | Schwarz | Nero |
| na | = | Naranja | Orange | Orange | Orange | Arancio |
| r | = | Rojo | Rouge | Red | Rot | Rosso |
| rs | = | Rosa | Rose | Pink | Rosa | Roseo |
| ve | = | Verde | Vert | Green | Grün | Verde |
| vi | = | Violeta | Violet | Purple | Violett | Viola |

Z-373043000

# ECO-550

400V 3N~

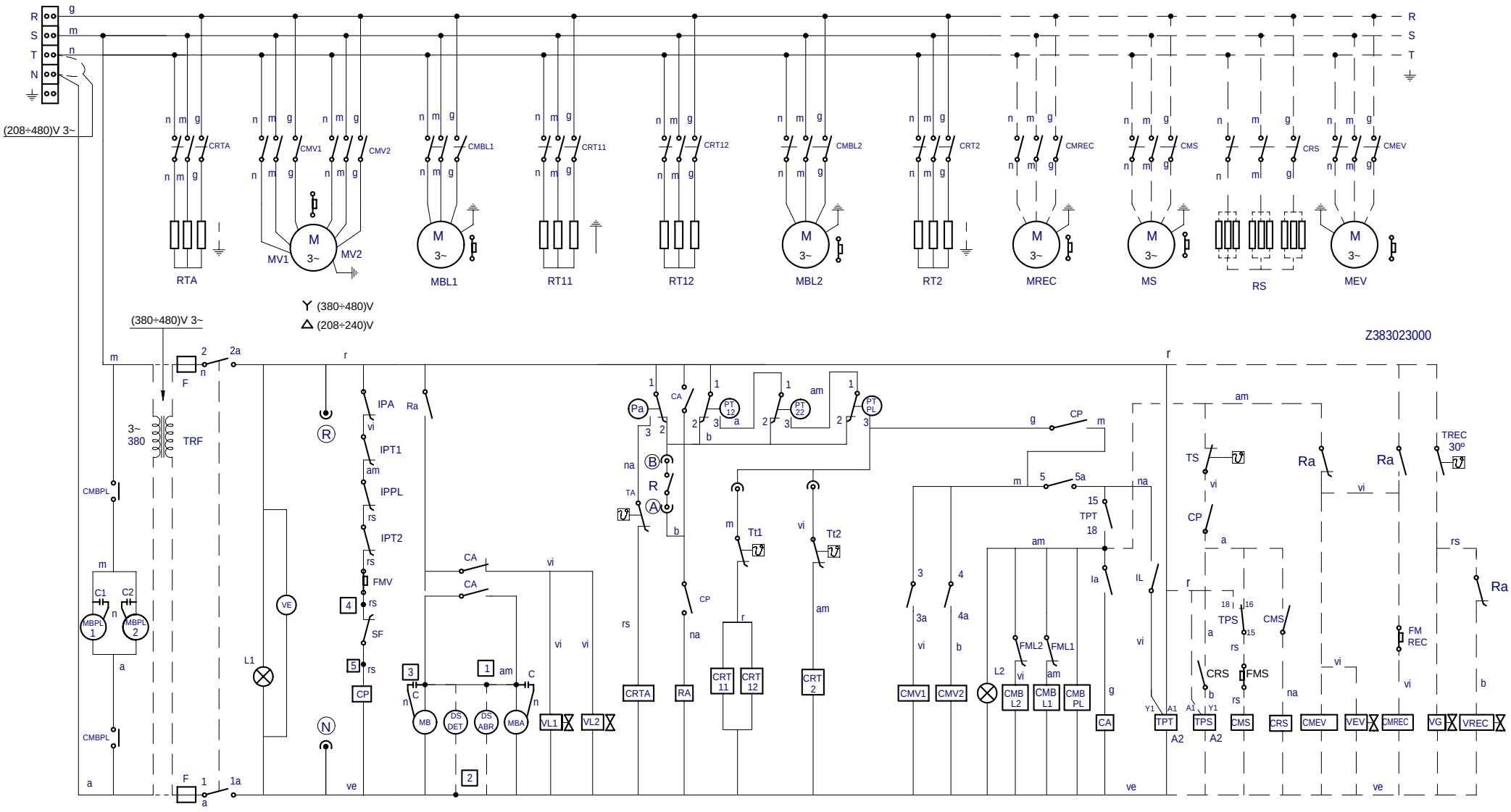


| IG | 1 1a | 2 2a | 3 3a | 4 4a | 5 5a | |
|---|---|---|---|---|---|---|
| 0 | | | | | | |
| ▽ | X | X | | | | |
| $V_1$ | X | X | X | | X | X |
| $V_2$ | X | X | | X | X | X |

0, $V_2$, ▽, $V_1$

| COLOR | | ESPAÑOL | FRANÇAIS | ENGLISH | DEUTSCH | ITALIANO |
|---|---|---|---|---|---|---|
| | | *COLOR* | *COULEUR* | *COLOUR* | *FARBEN* | *COLORE* |
| a | = | Azul | Bleu | Blue | Blau | Blu |
| am | = | Amarillo | Jaune | Yellow | Gelb | Giallo |
| am/ve | = | Amarillo/verde | Jaune / vert | Yellow / green | Gelb/grün | Giallo/verde |
| b | = | Blanco | Blanc | White | Weiß | Bianco |
| g | = | Gris | Gris | Grey | Grau | Grigio |
| m | = | Marrón | Marron | Brown | Braun | Marrone |

| COLOR | | ESPAÑOL | FRANÇAIS | ENGLISH | DEUTSCH | ITALIANO |
|---|---|---|---|---|---|---|
| | | *COLOR* | *COULEUR* | *COLOUR* | *FARBEN* | *COLORE* |
| n | = | Negro | Noir | Black | Schwarz | Nero |
| na | = | Naranja | Orange | Orange | Orange | Arancio |
| r | = | Rojo | Rouge | Red | Rot | Rosso |
| rs | = | Rosa | Rose | Pink | Rosa | Roseo |
| ve | = | Verde | Vert | Green | Grün | Verde |
| vi | = | Violeta | Violet | Purple | Violett | Viola |

# CONDENS.

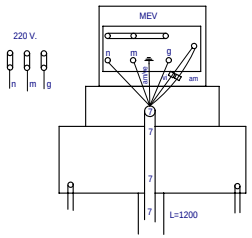


FI-460eT.S. / FI-550eT.S. / FI (TODOS) 380 V. / 220 V. — PG 42
- Prensaestopas Z-312941
- Junta goma Z-312942
- Tuerca Z-312943

FI-280eT.S. / FI-370eT.S. / ECO (TODOS) 380 V. — PG 36
- Prensaestopas R-143010
- Junta goma R-143026
- Tuerca R-143025

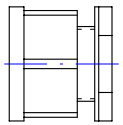

# Modular HE-15487 - 3

# C.E

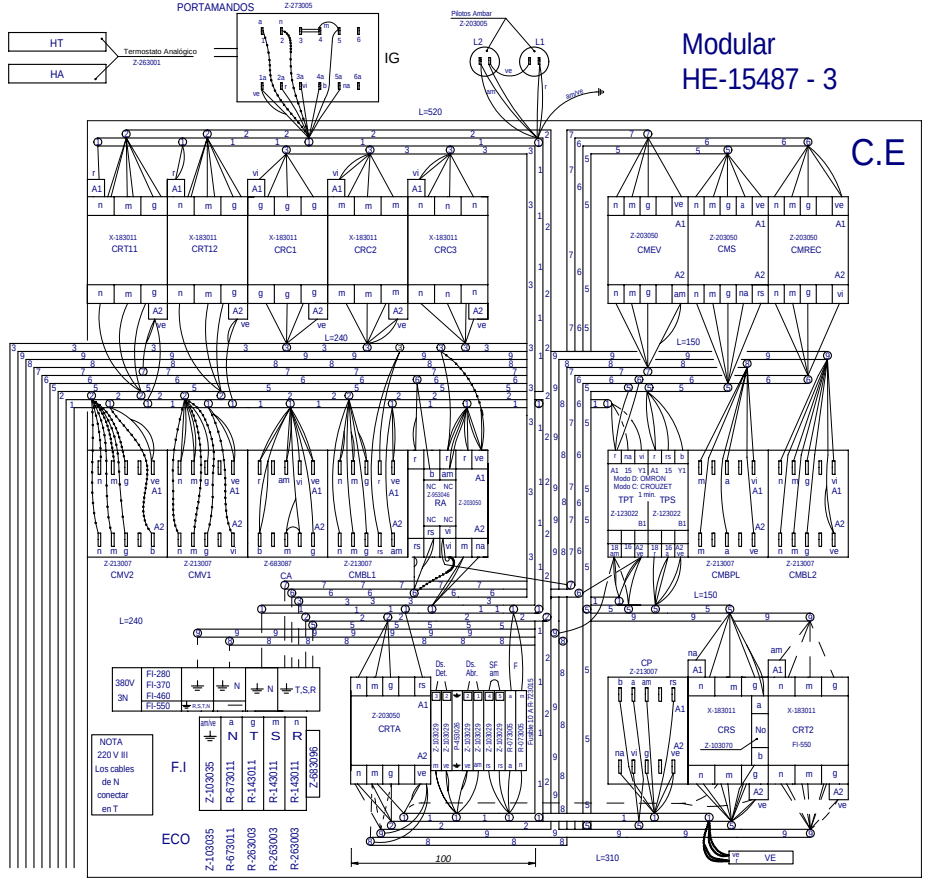


NOTA: ECO RECUPERADOR
No conectar el cable rosa en RA (NA)

# REC.

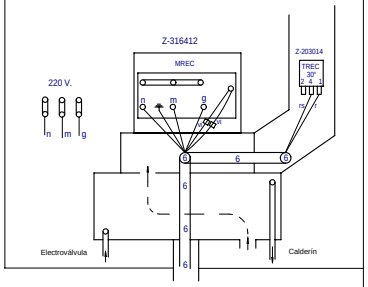


# SEC.

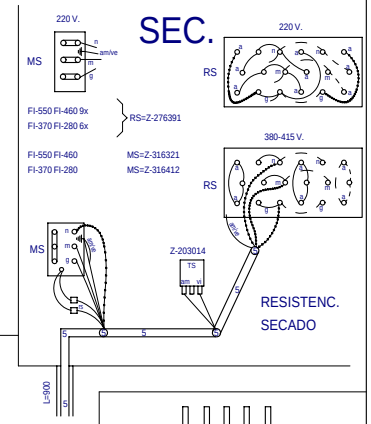


| Nº | REFERENCIA | 280 | 370 | 460 | 550 | |
|---|---|---|---|---|---|---|
| 1 | Z-313071 | X | X | X | X | I.Base Control |
| 2 | Z-313062 | X | X | X | X | I.Base Fuerza |
| 3 | Z-313063 | X | X | X | X | Calderín Eléctrico |
| 5 | Z-316381 | X | X | X | X | Secado |
| 6 | Z-316452 | X | X | X | X | Recuperador |
| 7 | Z-316702 | X | X | X | X | Condensandor.Extrac. |
| 8 | Z-333040 | | X | | | Prelavado FI-370 |
| 9 | Z-353041 | | | X | | Lavado 2 FI-460 |
| 8+9 | Z-373042 | | | | X | Lavado 2 + Prelavado FI-550 |

| ESQUEMAS ELECTRICOS | | LEYENDA |
|---|---|---|
| ECO 280 | Z-323020 | Z-313070 |
| ECO 370 | Z-343021 | Z-313070 |
| ECO 460 | Z-363022 | Z-313070 |
| ECO 550 | Z-383023 | Z-313070 |
| FI-280 | Z-313074 | Z-313070 |
| FI-370 | Z-333041 | Z-313070 |
| FI-460 | Z-353042 | Z-313070 |
| FI-550 | Z-373043 | Z-313070 |

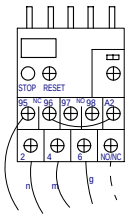


| RELES TERMICOS | 380-415 V | 230 V |
|---|---|---|
| FMS FI-460-550 | Z-316334 Reg. 2.6 | Z-316335 Reg. 4.6 |
| FMS FI-280-370 | Z-123014 Reg. 1.4 | Z-123015 Reg. 2.3 |
| FMREC | Z-123014 Reg. 1.4 | Z-123015 Reg. 2.3 |
| FMREV | Z-123014 Reg. 1.4 | Z-123015 Reg. 2.3 |

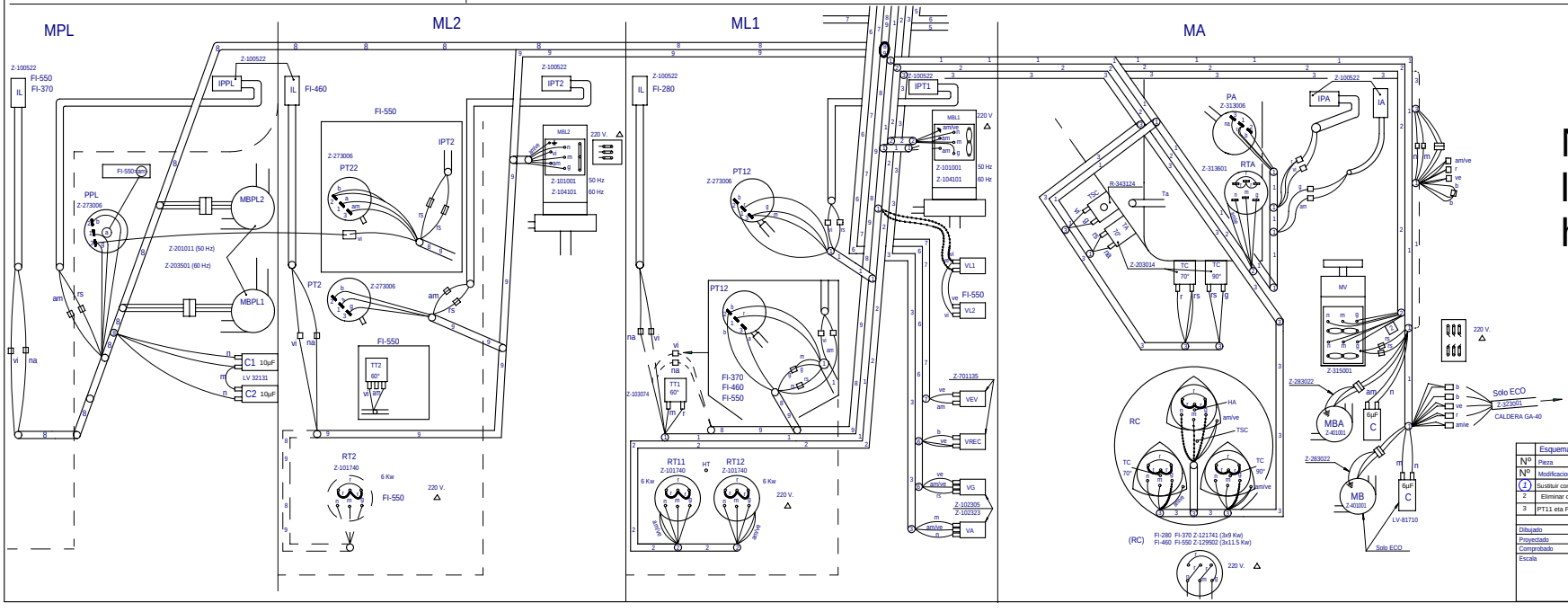


No Imprimir para la cadena, imprimir hoja 2 y 3 - 4

| | | | | |
|---|---|---|---|---|
| | Esquema montaje arrastre modular Izdo. | | Z-313072 | |
| Nº | Pieza | Material | Nº Clasificacion | Acabado |
| Nº | Modificacion | Propuesta de | Fecha | Tolerancias generales |
| 1 | Sustituir contac. R-663031 por Z-203050 y Z-316328 por Z-953046 | J.M.P. | 03-12-02 | <3± 50~100± |
| 2 | Eliminar conexion en 1G 6 y conectar en CMBL1 (Cable r y rs) | M.Mallo | 25-04-2005 | 3~25± >100± |
| 3 | PT11 eta PT21 kendutak | e.carrascal | 2008-12-05 | 25~50± <± |

| | Firma | Fecha | |
|---|---|---|---|
| Dibujado | S. N. | 6-2-2002 | FAGOR |
| Proyectado | | | Fagor Industrial,Koop.Elk, Mugatxa |
| Comprobado | | | |
| Escala | | | |

Mecanizado superficial

LAVAVAJILLAS

Plano numero HE-15487 - 3

Sustituye al Nº HE-15483

Sustituido por

Plano hau ez dakike erabili ez bertizta gan baimenitz gabe

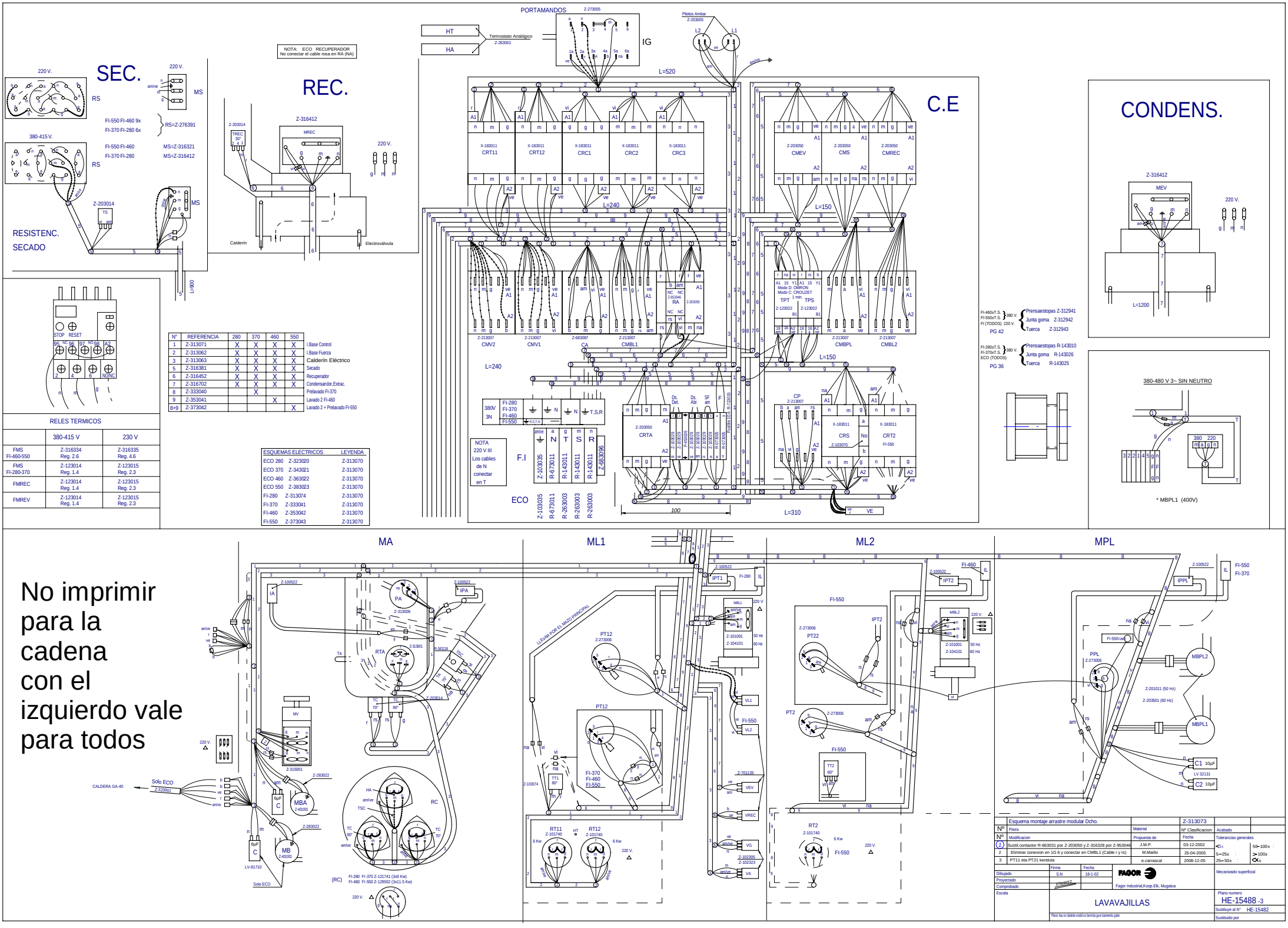
SEC.
REC.
C.E
CONDENS.
RESISTENC.
SECADO
RS
MS
220 V.
380-415 V.
FI-550 FI-460 9x
FI-370 FI-280 6x
RS=Z-276391
FI-550 FI-460
FI-370 FI-280
MS=Z-316321
MS=Z-316412
Z-203014
TS
L=900
NOTA: ECO RECUPERADOR
No conectar el cable rosa en RA (NA)
Z-316412
MREC
TREC 30°
Calderín
Electroválvula
PORTAMANDOS
Z-273005
HT
HA
Termostato Analógico
Z-263001
IG
Pilotos Ambar
Z-203005
L=520
L=240
L=150
L=310
100
CRT11
CRT12
CRC1
CRC2
CRC3
CMEV
CMS
CMREC
CMV2
CMV1
CA
CMBL1
CMBPL
CMBL2
TPT
TPS
RA
CRTA
CRS
CRT2
CP
F.I
ECO
380V 3N
FI-280
FI-370
FI-460
FI-550
T,S,R
Z-103035
R-673011
R-143011
R-263003
Z-683096
NOTA
220 V III
Los cables
de N
conectar
en T
STOP
RESET
RELES TERMICOS
380-415 V
230 V
FMS FI-460-550
Z-316334 Reg. 2.6
Z-316335 Reg. 4.6
FMS FI-280-370
Z-123014 Reg. 1.4
Z-123015 Reg. 2.3
FMREC
Z-123014 Reg. 1.4
Z-123015 Reg. 2.3
FMREV
Z-123014 Reg. 1.4
Z-123015 Reg. 2.3
Nº REFERENCIA 280 370 460 550
1 Z-313071 X X X X I.Base Control
2 Z-313062 X X X X I.Base Fuerza
3 Z-313063 X X X X Calderín Eléctrico
5 Z-316381 X X X X Secado
6 Z-316452 X X X X Recuperador
7 Z-316702 X X X X Condensandor,Extrac.
8 Z-333040 X Prelavado FI-370
9 Z-353041 X Lavado 2 FI-460
8+9 Z-373042 X Lavado 2 + Prelavado FI-550
ESQUEMAS ELECTRICOS LEYENDA
ECO 280 Z-323020 Z-313070
ECO 370 Z-343021 Z-313070
ECO 460 Z-363022 Z-313070
ECO 550 Z-383023 Z-313070
FI-280 Z-313074 Z-313070
FI-370 Z-333041 Z-313070
FI-460 Z-353042 Z-313070
FI-550 Z-373043 Z-313070
FI-460±T.S. FI-550±T.S. FI (TODOS) 220 V. 380 V.
Prensaestopas Z-312941
Junta goma Z-312942
Tuerca Z-312943
PG 42
FI-280±T.S. FI-370±T.S. ECO (TODOS) 380 V.
Prensaestopas R-143010
Junta goma R-143026
Tuerca R-143025
PG 36
Z-316412
MEV
L=1200
380-480 V 3~ SIN NEUTRO
* MBPL1 (400V)
No imprimir para la cadena con el izquierdo vale para todos
MA
ML1
ML2
MPL
IA
IPA
PA
RTA
MV
MBA
MB
RC
Solo ECO
CALDERA GA-40
LV-81710
(RC) FI-280 FI-370 Z-121741 (3x8 Kw)
FI-460 FI-550 Z-129502 (3x11.5 Kw)
IPT1
IPT2
PT12
PT22
PT2
RT1
RT2
VL1
VL2
VEV
VREC
VG
VA
MBL1
MBL2
IPPL
PPL
MBPL1
MBPL2
C1 10µF
C2 10µF
LV 32131
Esquema montaje arrastre modular Dcho.
Z-313073
Pieza
Material
Nº Clasificacion
Acabado
Modificacion
Propuesta de
Fecha
Tolerancias generales
1 Sustit.contactor R-663031 por Z-203050 y Z-316328 por Z-953046 J.M.P. 03-12-2002
2 Eliminar conexion en 1G 6 y conectar en CMBL1 (Cable r ys) M.Maillo 25-04-2005
3 PT11 eta PT21 kenduta e.carrascal 2008-12-05
Dibujado S.N 18-1-02
Proyectado
Comprobado
Escala
Firma
Fecha
Fagor Industrial,Koop.Elk, Mugatxa
Mecanizado superficial
LAVAVAJILLAS
Plano numero HE-15488 -3
Sustituye al Nº HE-15482
Sustituido por

## ESPANOL

Ⓐ Ⓑ = Puntos de conexion con R
Ⓒ = Puntos de conex.160/200 sin secado ni condensador
C,C1,C2 = Condensador
CA = Rele auxiliar aclarado
CMBL 1/2/3 = Contactor bomba lavado 1/2/3
CMBPL = Contactor bomba prelavado
CMEV = Contactor motor extractor
CMS = Contactor motor secado
CMV 1/2 = Contactor avance 1/2
CMREC = Contactor motor recuperador
CRC 11/12/13/21/22 = Contactor calentamiento calderin
CRS = Contactor resistencia secado
CRTA = Contactor calentamiento aclarado
CRT2 = Contactor calentamiento tanque 2
CRT11/12 = Contactor calentamiento tanque 1
CP = Rele puerta
DS.ABR = Dosificador abrillantador
DS.DET.= Dosificador detergente
F = Fusible
FMEV = Rele termico motor extractor
FML1/2/3 = S. Termico bomba lavado 1/2/3
FMS = Rele termico motor secado
FMREC = Rele termico motor recuperador
FMV = S. Termica motor avance
Ia = Micro aclarado
IG = Interruptor general
IL = Micro lavado
Im1/2/3 = Pulsador de marcha
IPA = Micro puerta aclarado
IP1/2/3 = Pulsador de parada
IPPL = Micro puerta prelavado
IPT1/2/3 = Micro puerta tanque 1/2/3
L1 = Piloto de encendido
L2 = Piloto marcha
MB = Bomba de llenado y aclarado
MBA = Bomba aclarado
MBL1/2/3 = Bomba lavado 1/2/3
MBP = Bomba de presion
MBPL = Bomba prelavado
MEV = Motor extractor vahos
MREC = Motor recuperador
MS = Motor secado
MV = Motor avance
Pa = Presostato aclarado
PE1/2 = Parada de emergencia
PPL = Presostato prelavado
PT11 = Presostato lavado 1 calentamiento
PT12 = Presostato lavado 1 llenado
PT21 = Presostato lavado 2 calentamiento
PT2/PT22 = Presostato lavado 2 llenado
PT3 = Presostato lavado 3 llenado
R = Rele de Generador A.C.
Ⓡ Ⓝ = Toma de alimentacion Generador A.C.
Ra = Rele auxiliar aclarado y llenado
RC11/12/13/21/22 = Resistencia calderin
RS = Resistencia secado
RTA = Resistencia calentamiento aclarado
RT2 = Resistencia tanque 2
RT11/12 = Resistencia tanque 1
SF = Micro fin recorrido
TA = Termostato aclarado
TC,1/2 = Termostato calderin
TPA = Temporizador Aclarado
TPT = Temporizador inicio
TPS = Temporizador secado
TREC = Termostato recuperador
TRF = Transformador
TS = Termostato secado
TSC,1/2 = Limitador calderin
Tt1/2 = Termostato tanque 1/2
VA = Electrovalvula llenado y aclarado
VE = Ventilador cuadro electrico
VEV = Electrovalvula condensacion vahos
VL1/2 = Electrovalvula llenado tanque
VG = Electrovalvula general
VREC = Electrovalvula salida

| COLOR | | COLORES |
|---|---|---|
| a | = | Azul |
| am | = | Amarillo |
| am/ve | = | Amarillo/verde |
| b | = | Blanco |
| g | = | Gris |
| m | = | Marrón |
| n | = | Negro |
| na | = | Naranja |
| r | = | Rojo |
| rs | = | Rosa |
| ve | = | Verde |
| vi | = | Violeta |

## FRANÇAIS

Points de conexion R
Points de conexion 160/200 sans sechege ni condensateur
Condensateur
Relais auxilier rinçage
Contacteur pompe lavage 1/2/3
Contacteur pompe prelavage
Contacteur moteur extracteur
Contacteur moteur sechage
Contacteur avance 1/2
Contacteur moteur recuperateur
Contacteur chauf. surchauffeur
Contacteur resistances sechage
Contacteur chaufage rinçage
Contacteur chaufage cuve 2
Contacteur chaufage cuve 1
Relais porte
Dosseur de tensoactif
Dosseur de detergent
Fusible
Relais termique moteur extracteur
S. Termique pompe lavage 1/2/3
Relais termique moteur sechage
Relais termique moteur recuperateur
S. Termica moteur avance
Micro rinçage
Interrupteur general
Micro lavage
Bouton marche
Micro porte rinçage
Bouton arrêt
Micro porte prelavage
Micro porte cuve 1/2/3
Voyant funcionement
Voyant demarrage
Pompe remplissage rinçage
Pompe rinçage
Pompe lavage 1/2/3
Pompe de pression
Pompe prelavage
Moteur extracteur vapeur
Moteur recuperateur
Moteur sechage
Moteur avance
Pressostat rinçage
Arrêt d´urgence
Pressostat prelavage
Pressostat lavage 1 chauffage
Pressostat lavage 1 remplissage
Pressostat lavage 2 chauffage
Pressostat lavage 2 remplissage
Pressostat lavage 3 remplissage
Relais du Generateur
Alimentation generateur
Relais auxilier rinçage remplissage
Resistance surchauffeur
Resistance sechage
Resistance chauffage rinçage
Resistance cuve 2
Resistance cuve 1
Micro fin de coourse
Thermostat de rinçage
Thermostat surchauffeur
Temporisateur rinçage
Temporisateur demarrage
Temporisateur sechage
Thermostate recuperateur
Transformateur
Thermostat sechage
Thermostat limiteur surchauffeur
Thermostat cuve 1/2
Electrovanne remplissage rinçage
Ventilateur tableau electrique
Electrovanne condenseur vapeur
Electrovanne remplissage cuve
Electrovanne general
Electrovanne demarrage

COULEURS

Bleu
Jaune
Jaune / vert
Blanc
Gris
Marron
Noir
Orange
Rouge
Rose
Vert
Violet

## ENGLISH

Conecction point with R
Connection points 160/200 without drying nor condenser
Condenser
Rinse auxiliary relay
Wash pump contactor 1/2/3
Pre-Wash pump contactor
Exhaust motor contactor
Drying motor contactor
Advance contactor 1/2
Motor recover contactor
Boiler heating contactor
Drying heating element contactor
Rinse heating contactor
Tank heating contactor 2
Tank heating contactor 1
Door relay
Rinse doser
Detergent doser
Fuse
Thermic switch exhaust motor relay
Thermic switch pump 1/2/3
Drying motor thermic relay
Thermic switch recover motor
Thermic switch rack pulling motor
Rinse microswitch
Main switch
Wash microswitch
On pushbutton
Rinse door microswitch
Off pushbutton
Pre-wash door microswitch
Tank door microswitch 1/2/3
Operation light
Start light
Fill and rinse pump
Rinse pump
Wash pump 1/2/3
Pressure pump
Pre-wash pump
Exhaust steam motor
Recover motor
Drying motor
Motor advance
Rinse level switch
Emergency stop
Pre-wash level switch
Wash level 1 and heating switch
Wash level 1 and fill switch
Wash level 2 and heating switch
Wash level 2 and fill switch
Wash 3 fill pressostat
Generator rele
Water heater feeding
Rinse and fill auxiliary relay
Boiler heating element
Drying heating element
Rinse heating heater
Tank heater 2
Tank heater 1
Safety end switch
Rinse thermostat
Boiler thermostat
Rinsing timer
Start timer
Drying timer
Recover thermostat
Trasformer
Drying thermostat
Boiler Hi-limit thermostat
Tank thermostat 1/2
Fill and rinse valve
Switchboard fan
Exhaust condenser solenoide valve
Tank fill valve
Main valve
Outlet solenoide valve

COLOUR

Blue
Yellow
Yellow / green
White
Grey
Brown
Black
Orange
Red
Pink
Green
Purple

## DEUTSCH

Anschlusspunkte mit R
Anschlusspunkte 160/200 weder ohne Trocknung noch Kondensator
Kondensator
Hilfsrelais Spülen
Kontaktschütz Waschpumpe 1/2/3
Kontaktschütz Vorwaschpumpe
Kontaktschütz Abzugsmotor
Kontaktschütz Trocknungsmotor
Kontaktschütz Vorlauf 1/2
Kontaktschütz Rekuperatormotor
Kontaktschütz Boilerheizung
Kontaktschütz Trocknungsheizwiderstand
Kontaktschütz Spülheizung
Kontaktschütz Heizung Tank 2
Kontaktschütz Heizung Tank 1
Türrelais
Dosierer Glanzmittel
Dosierer Spülmittel
Sicherung
Thermorelais Abzugsmotor
Thermoschalter Waschpumpe 1/2/3
Thermorelais Trocknungsmotor
Thermorelais Rekuperatormotor
Thermoschalter Vorlaufmotor
Mikroschalter Spülen
Hauptschalter
Mikroschalter Waschen
Betriebstaster
Mikroschalter Tür Spülen
Aus-Taster
Mikroschalter Tür Vorwaschen
Mikroschalter Tür Tank 1/2/3
Betriebsanzeigelampe
Startanzeigelampe
Füll-und Spülpumpe
Spülpumpe
Waschpumpe 1/2/3
Druckpumpe
Vorwaschpumpe
Motor Dampfabzug
Rekuperatormotor
Trocknungsmotor
Vorlaufmotor
Druckregler Spülen
Not-Aus
Druckregler Vorwaschen
Druckregler Waschstufe 1 Heizen
Druckregler Waschstufe 1 Füllen
Druckregler Waschstufe 2 Heizen
Druckregler Waschstufe 2 Füllen
Druckwächter Spülgang 3 Füllvorgang
Relais Generator
Stromversorgungsanschluss Generator
Hilfsrelais Spülen und Füllen
Boilerheizwiderstand
Heizwiderstand Trocknen
Heizwiderstand Spülen
Heizwiderstand Tank 2
Heizwiderstand Tank 1
Mikroschalter Zyklusende
Thermostat zum Spülen
Thermostat kessel
Zeitschaltuhr Spülgang
Start-Timer
Trocknungs-Timer
Rekuperator-Timer
Transformator
Trocknungsthermostat
Grenzthermostat Boiler
Thermostat Tank 1/2
Elektroventil Füllen und Spülen
Schalttafelventilator
Elektroventil Dampfkondensation
Elektroventil Tankfüllung
Hauptelektroventil
Ausgangselectroventil

FARBEN

Blau
Gelb
Gelb/grün
Weiß
Grau
Braun
Schwarz
Orange
Rot
Rosa
Grün
Violett

## ITALIANO

Punti di collegamento con R
Punti di collegamento 160/200 senza asciugatura né condensatore
Condensatore
Rele ausiliario risciacquo
Contattore pompa lavaggio 1/2/3
Contattore pompa prelavaggio
Contattore motore estrattore
Contattore motore asciugatura
Contattore avanzamento 1/2
Contattore motore recuperatore
Contattore riscaldamento boiler
Contattore resistenza asciugatura
Contattore riscaldamento risciacquo
Contattore riscaldamento serbatoio 2
Contattore riscaldamento serbatoio 1
Rele porta
Dosatore brillantante
Dosatore detersivo
Fusibile
Rele termico motore estrattore
Rele termico pompa lavaggio 1/2/3
Rele termico motore asciugatura
Contattore motore recuperatore
Rele termico motore avanzamento
Microinterruttore risciacquo
Interruttore generale
Microinterruttore lavaggio
Bottone di avvio
Microinterruttore porta risciacquo
Bottone di arresto
Microinterruttore porta prelavaggio
Microinterruttore porta serbatoio 1/2/3
Spia accensione
Spia avvio
Pompa di riempimento e risciacquo
Pompa risciacquo
Pompa lavaggio 1/2/3
Pompa a pressione
Pompa prelavaggio
Motore estrazione vapore
Motore recuperatore
Motore asciugatura
Motore avanzamento
Pressostato risciacquo
Arresto di emergenza
Pressostato prelavaggio
Pressostato lavaggio 1 riscaldamento
Pressostato lavaggio 1 riempimento
Pressostato lavaggio 2 riscaldamento
Pressostato lavaggio 2 riempimento
Pressostato lavaggio 3 riempimento
Rele Generator
Alimentazione generatore
Rele ausiliario risciacquo e riempimento
Resistenza boiler
Resistenza asciugatura
Resistenza riscaldamento risciacquo
Resistenza serbatoio 2
Resistenza serbatoio 1
Microinterruttore finecorsa
Termostato risciacquo
Termostato boiler
Timer risciacquo
Timer avvio
Timer asciugatura
Termostato recuperatore
Trasformatore
Termostato asciugatura
Termostato limitatore boiler
Termostato serbatoio 1/2
Elettrovalvola riempimento e risciacquo
Ventilatore quadro elettrico
Elettrovalvola condensazione vapore
Elettrovalvola riempimento serbatoio
Elettrovalvola generale
Elettrovalvola uscita

COLORE

Blu
Giallo
Giallo/verde
Bianco
Grigio
Marrone
Nero
Arancio
Rosso
Roseo
Verde
Viola

Z313070000