ARMARIO GASTRONORM DE REFRIGERACIÓN CONCEPT / GASTRONORM CABINET COOLING CONCEPT

- CAFP-801 19029729 / CAFP-802 19029730
- CAEP-801 19029773 / CAEP-802 19029774
- CAFN-801 19029744 / CAFN-802 19029746
- CAFP-802-2C 19029742 / CAFP-802-3C 19029743

FAGOR

Versión 2014-10

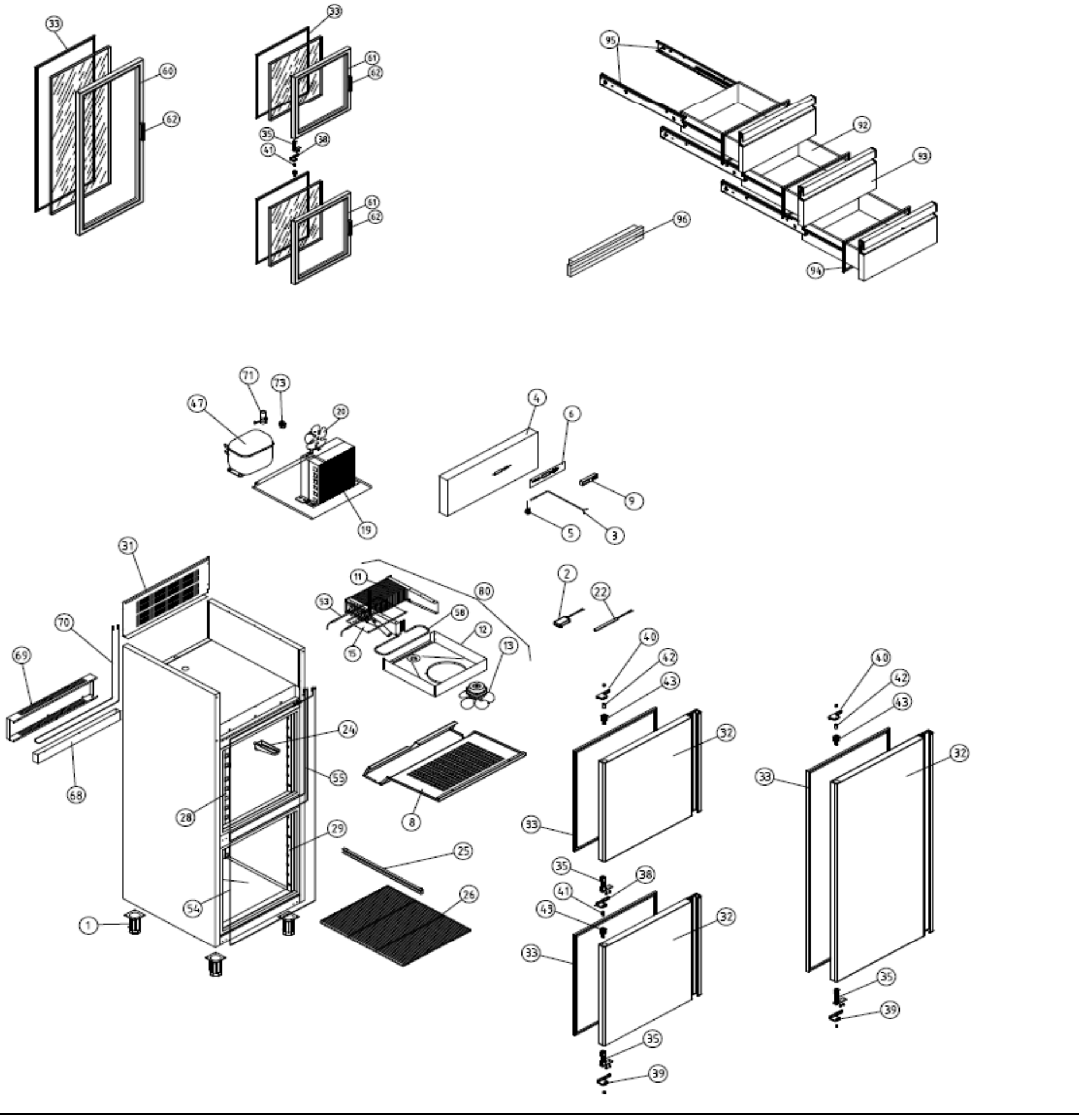

ARMARIO GASTRONORM DE REFRIGERACIÓN CONCEPT / GASTRONORM CABINET COOLING CONCEPT

CAF-802-C 19029758

CAF-802-P 19029765

CAFP-802/2 19029731

FAGOR

Versión 2014-10

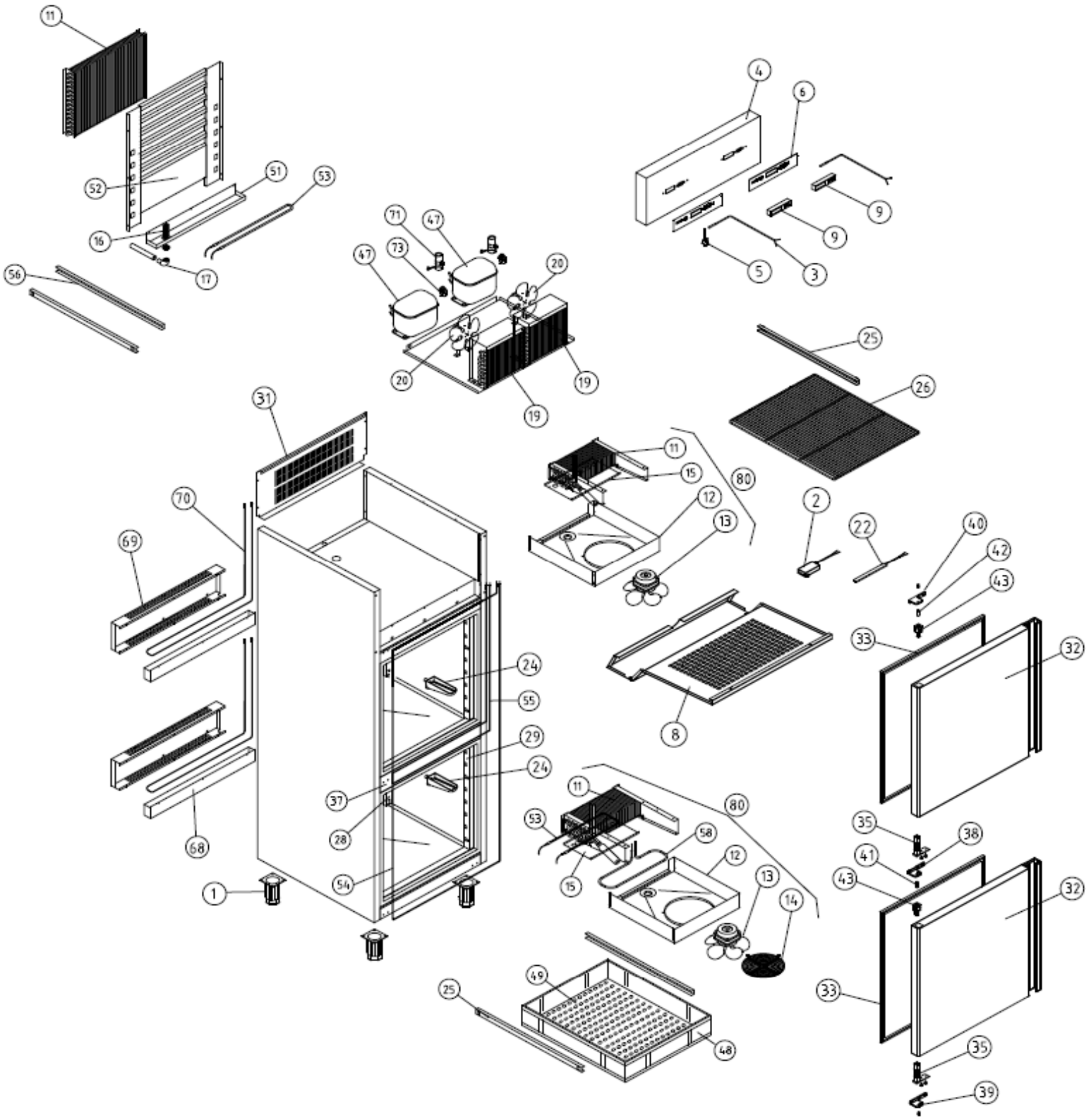

ARMARIO GASTRONORM DE REFRIGERACIÓN CONCEPT / GASTRONORM CABINET COOLING CONCEPT

CAFP-801 19029729 / CAFP-802 19029730

CAEP-801 19029773 / CAEP-802 19029774

CAFN-801 19029744 / CAFN-802 19029746

CAFP-802-2C 19029742 / CAFP-802-3C 19029743

FAGOR

Versión 2014-10

| Nº | CODE CÓDIGO | RECOM. | DESCRIPCIÓN | DESCRIPTION | CAFP-801 | CAFP-802 | CAFN-801 | CAFN-802 | CAEP-801 | CAEP-802 | CAFP-802-2C | CAFP-802-3C |
|---|---|---|---|---|---|---|---|---|---|---|---|---|
| 1 | 12033566 | | PATA REGULABLE ARM.GASTRO | GASTRO CABINET ADJUSTABLE LEG | 4 | 4 | 4 | 4 | 4 | 4 | 4 | 4 |
| 2 | 12103609 | | FUENT APV-16-24 115-230 50/60Hz 24V 16W | APV-16-24 115-230 50/60Hz 24V 16W SOURCE | 1 | 1 | | | 1 | 1 | 1 | 1 |
| 3 | 12045530 | | SONDA NTC 2,5 MTS | THERMOSTAT PROBE | 1 | 1 | 1 | 1 | 1 | 1 | 1 | 1 |
| 4 | 12116239 | | CABEZA AFP-801 FAGOR CONCEPT | HEAD AFP-801 CONCEPT | 1 | 1 | 1 | 1 | 1 | 1 | 1 | 1 |
| 5 | 12036888 | | MICROR.CONMUT.E3111CA | MICROR.CONMUT.E3111CA | 1 | 1 | 1 | 1 | 1 | 1 | 1 | 1 |
| 6 | 12104752 | | ADHESIVO G. CONCEPT PWC | PWC CONCEPT RANGE STICKER | 1 | 1 | 1 | 1 | 1 | 1 | 1 | 1 |
| 8 | 12116300 | | TAPA EVAPORADOR ARM. 800 CONCEPT | EVAPORATOR COVER ARM. 800 CONCEPT | 1 | 1 | 1 | 1 | 1 | 1 | 1 | 1 |
| 9 | 12067649 | | TERMOSTATO POWER COMPAC TROPICAL | TROPICAL POWER COMPACT THERMOSTAT | 1 | 1 | | | 1 | 1 | 1 | 1 |
| 9 | 12040693 | | TERMOSTATO POWER COMPAC CONG. | FREEZER POWER COMPACT THERMOSTAT | | | 1 | 1 | | | | |
| 11 | 12031794 | | BAT.6T4R300A4S PINTADO.ARMARIO | BAT.6T4R300A4S PINTADO.ARMARIO | 1 | 1 | | | 1 | 1 | 1 | 1 |
| 11 | 12048802 | | BAT. 6T 4R 300A 6S 2 CIRCUITO | BAT. 6T 4R 300A 6S 2 CIRCUITO | | | 1 | 1 | | | | |
| 12 | 12070030 | | SUJ.VENT.AFP-700,800 COMPACTO | SUJ.VENT.AFP-700,800 COMPACTO | 1 | 1 | 1 | 1 | 1 | 1 | 1 | 1 |
| 13 | 12034545 | | VENTIL.EVAPOR.5W S/ARO S/PATAS | VENTIL.EVAPOR.5W S/ARO S/PATAS | 1 | 1 | 1 | 1 | 1 | 1 | 1 | 1 |
| 15 | 12044961 | | CUBRER.EVAP.FC61B ARM.COMPACTO | CUBRER.EVAP.FC61B ARM.COMPACTO | 1 | 1 | 1 | | 1 | 1 | 1 | 1 |
| 19 | 12050285 | | CONDENSADOR VENTILADO 100 | CONDENSADOR VENTILADO 100 | | | 1 | 1 | | | | |
| 19 | 12032903 | | CONDENSADOR 9X2 | CONDENSADOR 9X2 | 1 | 1 | | | 1 | 1 | 1 | 1 |
| 20 | 12032903 | | VENTILADOR 10W PATA PALA 220V | VENTILADOR 10W PATA PALA 220V | 1 | 1 | | | 1 | 1 | 1 | 1 |
| 22 | 12117149 | | TIRA LED T3-270-3014-868.16-CW24V DC 2mt | T3-270-3014-868.16-CW24V DC 2mt LED STRIP | 1 | 1 | | | 1 | 1 | 1 | 1 |
| 24 | 12037375 | | CANALIZADOR AGUA 150 GRIS REFRIGERACION | REFRIGERATION GREY 150 WATER DRAINAGE | 1 | 1 | | | 1 | 1 | 1 | |
| 24 | 12037314 | | CANALIZADOR AGUA 150 NEGRO MANT.CONGEL. | FREEZER BLACK 150 WATER DRAINAGE | | | 1 | 1 | | | | |
| 25 | 12037948 | | GUIA GN L=662 mm | GUIDE GN L=662 mm | 6 | 6 | 6 | 6 | 6 | 6 | 2 | 2 |
| 26 | 12037958 | | PARRILLA GN 2/1 650X530 | GRILL GN 2/1 650x530 | 3 | 3 | 3 | 3 | 3 | 3 | 1 | 1 |
| 28 | 12034805 | | CREMALL.INT.AFP-GN | CREMALL.INT.AFP-GN | 2 | 2 | 2 | 2 | 2 | 2 | | |
| 28 | 12036498 | | CREMALL.INT.DPTO.AF-702-C | CREMALL.INT.DPTO.AF-702-C | | | | | | | 2 | 2 |
| 28 | 12069495 | | CREMALL.DELANT.AFP-CAJONES | CREMALL.DELANT.AFP-CAJONES | | | | | | | 2 | 2 |
| 90 | 12069496 | | CREM.INT.IZDA.AFP-CAJONES | CREM.INT.IZDA.AFP-CAJONES | | | | | | | 1 | 1 |
| 90 | 12069497 | | CREM.INTER.DCH.AFP-CAJONES | CREM.INTER.DCH.AFP-CAJONES | | | | | | | 1 | 1 |
| 29 | 12034237 | | CREMALL.DELANT.AFP-GN | CREMALL.DELANT.AFP-GN | 2 | | 2 | | 2 | | | |
| 29 | 12035486 | | CREM.DEL.PEQ.AFP-GN DCHA. | CREM.DEL.PEQ.AFP-GN DCHA. | | 4 | | 4 | | 4 | 2 | 2 |
| 31 | 12036589 | | REJILLA MOTOR 800 | GRID ENGINE 800 | 1 | 1 | 1 | 1 | 1 | 1 | 1 | 1 |
| 32 | 12083604 | | PUE PEQ AFP CONCEPT IZD | PUE PEQ AFP CONCEPT IZD | | 2 | | 2 | | | 1 | 1 |
| 32 | 12083602 | | PUE CARN AFP/AFN CONCEPT IZD | PUE CARN AFP/AFN CONCEPT IZD | 1 | | 1 | | | | | |
| 33 | 12038148 | | BURLETE PUERTA CARNICERA ARMARIO | GASKET DOOR CABINET BUTCHER | 1 | | 1 | | 1 | | | |
| 33 | 12038144 | | BURLETE PUERTA PEQ. ARMARIO | SMALL DOOR GASKET. WARDROBE | | 2 | | 2 | | 2 | 1 | 1 |
| 35 | 12038130 | | BIS.TRS1D DOBL MUELLE DV-2608 | DOUBLE SPRING HINGE TRS1D DV-2608 | 1 | 2 | 1 | 2 | 1 | 2 | 1 | 1 |
| 37 | 12083394 | | FRONTI HORZ.POST.AFP MAGNETICO | MAGNETIC HORZ.POST.AFP FRONTI | | 1 | | 1 | | 1 | 1 | 1 |
| 38 | 12036776 | | SOP.BISAG INF IZQ. FRES | INF SOP.BISAG LEFT. FRES | | 1 | | 1 | | 1 | | |
| 39 | 12036986 | | SOP.BISAG.INF.IZD. | LEFT LOW HINGE SUPPORT | 1 | 1 | 1 | 1 | 1 | 1 | 1 | 1 |
| 40 | 12041474 | | SOPORTE BISAGRA SUPERIOR IZQUIERDO | LEFT TOP HINGE SUPPORT | 1 | 1 | 1 | 1 | 1 | 1 | 1 | 1 |
| 41 | 12037138 | | EJE ROSCA EXT.30X10INOX | THREADED SHAFT EXT.30X10INOX | | 1 | | 1 | | 1 | | |
| 42 | 12038076 | | EJE SUP. PUERTAS 30x10 VARILLA INOX.INT. M-6 | SUP HUB. 30x10 ROD DOORS INOX.INT. M-6 | 1 | 1 | 1 | 1 | 1 | 1 | 1 | 1 |
| 43 | 12037723 | | CAJA ALOJAMIENTO MUELLE GRIS | GREY SPRING HOUSING BOX | 1 | 2 | 1 | 2 | 1 | 2 | 1 | 1 |
| 47 | 12028976 | | COMPRES.FR-8.5-G R134A | COMPRES.FR-8.5-G R134A | 1 | 1 | | | 1 | 1 | 1 | 1 |
| 47 | 12027322 | | COMPR.SC-15-CL R404A | COMPR.SC-15-CL R404A | | | 1 | 1 | | | | |
| 53 | 12034637 | | RESIST.BLIND.FC61-71 350W | RESIST.R17 350W CABLE1MT. | | | 1 | 1 | | | | |
| 54 | 12036014 | | RESIST.MARCO EXT.700/800 43W | RESIST.MARCO EXT.700/800 43W | | | 1 | 1 | | | | |
| 55 | 12036316 | | RESIST.FRONTI H.1400-1600 12W | RESIST.FRONTI H.1400-1600 12W | | | | 1 | | | | |
| 58 | 12036313 | | RESIST.BANDEJA 700-20W | RESIST.BANDEJA 700-20W | | | 1 | 1 | | | | |
| 60 | 12045918 | | PT. CRISTAL ARM. CARNICERA | GLASS DOOR ARM. BUTCHER | | | | | 1 | | | |
| 61 | 12068257 | | PT. CRISTAL ARM. PEQUEÑA | GLASS DOOR ARM. SMALL | | | | | | 2 | | |
| 62 | 12068289 | | TIRAD. PT. CRISTAL | GLASS DOOR HANDLE | | | | | 1 | 2 | | |
| 68 | 12034715 | | BAND.EVAP.AUT.AFP-GN | BAND.EVAP.AUT.AFP-GN | 1 | 1 | 1 | 1 | 1 | 1 | 1 | 1 |
| 69 | 12036513 | | TAPA BANDEJA EVAP. AUTOM. AFP.800 | TRAY COVER EVAP. AUTO. AFP.800 | 1 | 1 | 1 | 1 | 1 | 1 | 1 | 1 |
| 70 | 12038150 | | RESIST.EVAP.AUT.80W 3MT | RESIST.EVAP.AUT.80W 3MT | 1 | 1 | 1 | 1 | 1 | 1 | 1 | 1 |
| 71 | 12018649 | | CONDEN.ARRANQUE SC-117U5017 80 mF | CONDEN.ARRANQUE SC-117U5017 80 mF | | | 1 | 1 | | | | |
| 71 | 12033454 | | CONDEN.ARRANQUE FR-117U5015 80 mF | CONDEN.ARRANQUE FR-117U5015 80 mF | 1 | 1 | | | 1 | 1 | 1 | 1 |
| 73 | 12034947 | | RELE ARRANQUE COMPRESOR FR-8,5G 2 | RELE ARRANQUE COMPRESOR FR-8,5G 2 | 1 | 1 | | | 1 | 1 | 1 | 1 |
| 73 | 12034983 | | RELE ARRANQ COMPR.SC-15CL 6019 | RELE ARRANQ COMPR.SC-15CL 6019 | | | 1 | 1 | | | | |
| 80 | 12116301 | | UD.EV. AFP-700,800,APP | UD.EV. AFP-700,800,APP | 1 | 1 | | | 1 | 1 | 1 | 1 |
| 80 | 12110143 | | UND. EV. AFN-700,800 | UND. EV. AFN-700,800 | | | 1 | 1 | | | | |
| 92 | 12029571 | | CAJON GN2/1 PROF.200 AFP802-2C | DRAWER GN2 / 1 PROF.200 AFP802-2C | | | | | | | 2 | |
| 92 | 12030860 | | CAJON GN2/1AFP PROF.100 | DRAWER GN2 / 1AFP PROF.100 | | | | | | | | 3 |
| 93 | 12083654 | | CJ.CAJ.PRF200 AFP-800 CONCEPT | DRAWER SET PRF200 AFP-800 CONCEPT | | | | | | | 2 | |
| 93 | 12083649 | | FRENT.CAJ.PROF.100 AFP802-3C | DRAWER FRONT PROF.100 AFP802-3C | | | | | | | | 3 |
| 94 | 12035555 | | BURLETE 635X315 CJ.AFP800 | GASKET 635x315 | | | | | | | 2 | |
| 94 | 12035827 | | BURLETE 635X190 CJ.AFP800 | GASKET 635x190 | | | | | | | | 3 |
| 95 | 12068304 | | GUIA ACERO LONGT.550 (JUEGO) | STEEL GUIDE LONGT.550 | | | | | | | 2 | 3 |
| 96 | 12083395 | | FRONTI HOR.POST.CAJ.AFP MAGNET | FRONTI HOR.POST.CAJ.AFP MAGNET | | | | | | | 1 | 2 |

ARMARIO GASTRONORM DE REFRIGERACIÓN CONCEPT / GASTRONORM CABINET COOLING CONCEPT

CAF-802-C 19029758

CAF-802-P 19029765

CAFP-802/2 19029731

FAGOR

Versión 2014-10

| Nº | CODE CÓDIGO | RECOM. | DESCRIPCIÓN | DESCRIPTION | CAF-802-C | CAF-802-P | CAFP-802/2 |
|---|---|---|---|---|---|---|---|
| 1 | 12033566 | | PATA REGULABLE ARM.GASTRO | GASTRO CABINET ADJUSTABLE LEG | 4 | 4 | 4 |
| 2 | 12103609 | | FUENT APV-16-24 115-230 50/60Hz 24V 16W | APV-16-24 115-230 50/60Hz 24V 16W SOURCE | 1 | 1 | 1 |
| 3 | 12045530 | | SONDA NTC 2,5 MTS | THERMOSTAT PROBE | 2 | 2 | 2 |
| 4 | 12116255 | | CABEZA AF-800 C/P FAGOR CONCEPT | HEAD AF-800 C/P CONCEPT | 1 | 1 | 1 |
| 5 | 12036888 | | MICROR.CONMUT.E3111CA | MICROR.CONMUT.E3111CA | 1 | 1 | 1 |
| 6 | 12104752 | | ADHESIVO G. CONCEPT PWC | PWC CONCEPT RANGE STICKER | 2 | 2 | 2 |
| 8 | 12116300 | | TAPA EVAPORADOR ARM. 800 CONCEPT | EVAPORATOR COVER ARM. 800 CONCEPT | 1 | 1 | 1 |
| 9 | 12067649 | | TERMOSTATO POWER COMPAC TROPICAL | TROPICAL POWER COMPACT THERMOSTAT | 1 | 1 | 2 |
| 9 | 12040693 | | TERMOSTATO POWER COMPAC CONG. | FREEZER POWER COMPACT THERMOSTAT | 1 | 1 | |
| 11 | 12030935 | | EV.B14T2R426A6S DPTO.PESC PIN. | EV.B14T2R426A6S DPTO.PESC PIN. | 1 | | |
| 11 | 12041887 | | BATERIA 4T 4R 300A 4S (PINTADO | BATERIA 4T 4R 300A 4S (PINTADO | 1 | 1 | 2 |
| 11 | 12046898 | | BAT.6T4R 300A 6S.PINT.ARMARIOS | BAT.6T4R 300A 6S.PINT | | 1 | |
| 12 | 12070030 | | SUJ.VENT.AFP-700,800 COMPACTO | SUJ.VENT.AFP-700,800 COMPACTO | 1 | 2 | 2 |
| 13 | 12034545 | | VENTIL.EVAPOR.5W S/ARO S/PATAS | VENTIL.EVAPOR.5W S/ARO S/PATAS | 1 | 2 | 2 |
| 14 | 12034663 | | REJILLA VENT.D.246 PINTADA | REJILLA VENT.D.246 PINTADA | | 1 | 1 |
| 15 | 12044961 | | CUBRER.EVAP.FC61B ARM.COMPACTO | CUBRER.EVAP.FC61B ARM.COMPACTO | 1 | 2 | 2 |
| 16 | 12037617 | | DESAGÜE 1/2 PULG. CUELLO CORTO | 1/2 INCH DRAIN. SHORT NECK | 1 | | |
| 17 | 12037541 | | CODO PVC MIXTO 90º 20x1/2 | PVC ELBOW JOINT 90 20x1 / 2 | 1 | | |
| 19 | 12033007 | | CONDENSADOR 8X2 REF.C CT82DG | CONDENSADOR 8X2 REF.C CT82DG | 2 | 1 | 2 |
| 19 | 12031472 | | CONDENSADOR 10X4 NEUTRO | CONDENSADOR 10X4 NEUTRO | | 1 | |
| 20 | 12032903 | | VENTILADOR 10W PATA PALA 220V | VENTILADOR 10W PATA PALA 220V | 2 | 1 | |
| 20 | 12059041 | | VENT 5W H72 200 28º 0.5m VS | VENT 5W H72 200 28º 0.5m VS | | 1 | 2 |
| 22 | 12117149 | | TIRA LED T3-270-3014-868.16-CW24V DC 2mt | T3-270-3014-868.16-CW24V DC 2mt LED STRIP | 1 | 1 | 1 |
| 24 | 12037375 | | CANALIZADOR AGUA 150 GRIS REFRIGERACION | REFRIGERATION GREY 150 WATER DRAINAGE | 1 | 1 | 2 |
| 24 | 12037314 | | CANALIZADOR AGUA 150 NEGRO MANT.CONGEL. | FREEZER BLACK 150 WATER DRAINAGE | | 1 | |
| 25 | 12037948 | | GUIA GN L=662 mm | GUIDE GN L=662 mm | 2 | 8 | 4 |
| 26 | 12037958 | | PARRILLA GN 2/1 650X530 | GRILL GN 2/1 650x530 | 1 | 1 | 2 |
| 28 | 12036498 | | CREMALL.INT.DPTO.AF-702-C | CREMALL.INT.DPTO.AF-702-C | 2 | 4 | 4 |
| 29 | 12035486 | | CREM.DEL.PEQ.AFP-GN DCHA. | CREM.DEL.PEQ.AFP-GN DCHA. | 4 | 4 | 4 |
| 31 | 12036589 | | REJILLA MOTOR 800 | GRID ENGINE 800 | 1 | 1 | 1 |
| 32 | 12083604 | | PUE PEQ AFP CONCEPT IZD | PUE PEQ AFP CONCEPT IZD | 2 | 2 | 2 |
| 33 | 12038144 | | BURLETE PUERTA PEQ. ARMARIO | SMALL DOOR GASKET. WARDROBE | 2 | 2 | 2 |
| 35 | 12038130 | | BIS.TRS1D DOBL MUELLE DV-2608 | DOUBLE SPRING HINGE TRS1D DV-2608 | 2 | 2 | 2 |
| 37 | 12083396 | | FRONTI HOR.POST.AF-700,800-C/P | FRONTI HOR.POST.AF-700.800-C / P | 1 | 1 | 1 |
| 38 | 12036776 | | SOP.BISAG INF IZQ. FRES | INF SOP.BISAG LEFT. FRES | 1 | 1 | 1 |
| 39 | 12036986 | | SOP.BISAG.INF.IZD. | LEFT LOW HINGE SUPPORT | 1 | 1 | 1 |
| 40 | 12041474 | | SOPORTE BISAGRA SUPERIOR IZQUIERDO | LEFT TOP HINGE SUPPORT | 1 | 1 | 1 |
| 41 | 12037138 | | EJE ROSCA EXT.30X10INOX | THREADED SHAFT EXT.30X10INOX | 1 | 1 | 1 |
| 42 | 12038076 | | EJE SUP. PUERTAS 30x10 VARILLA INOX.INT. M-6 | SUP HUB. 30x10 ROD DOORS INOX.INT. M-6 | 1 | 1 | 1 |
| 43 | 12037723 | | CAJA ALOJAMIENTO MUELLE GRIS | GREY SPRING HOUSING BOX | 2 | 2 | 2 |
| 47 | 12059107 | | COMPR. TL-5-G R134A | COMPR. TL-5-G R134A | 2 | 1 | 2 |
| 47 | 12027053 | | COMPR. SC-12-CLX.2 220V 50/60HZ 104L2697 | COMPR. SC-12-CLX.2 220V 50/60HZ 104L2697 | | 1 | |
| 48 | 12033784 | | CUBETA DPTO CONGEL.530X540 | TRAY DEPT CONGEL.530X540 | 3 | 3 | |
| 49 | 12034707 | | FOND. PERF.AGUILAR 530x540x100 | FOND. PERF.AGUILAR 530x540x100 | 3 | | |
| 51 | 12035779 | | BANDEJA GOTEO DPTO.PESCADO | DRIP TRAY DPTO. FISH | 1 | | |
| 52 | 12069485 | | DUELAS EVAP.DPTO.PESCADO | SLAT EVAP.DPTO.FISH | 1 | | |
| 53 | 12033255 | | RESIST.DESES.DEP.PESC.220V425W | RESIST.DESES.DEP.PESC.220V425W | 1 | | |
| 53 | 12034637 | | RESIST.BLIND.FC61-71 350W | RESIST.R17 350W CABLE1MT. | | 1 | |
| 54 | 12036014 | | RESIST.MARCO EXT.700/800 43W | RESIST.MARCO EXT.700/800 43W | | 1 | |
| 55 | 12036316 | | RESIST.FRONTI H.1400-1600 12W | RESIST.FRONTI H.1400-1600 12W | | 1 | |
| 56 | 12036716 | | GUIA BAJ GN CENT L=613MM Y PES | GUIDE GN L=613 mm | 6 | | |
| 58 | 12035911 | | RESIST. BANDEJA DEPART, 18W | RESIST. BANDEJA DEPART, 18W | | 1 | |
| 68 | 12034715 | | BAND.EVAP.AUT.AFP-GN | BAND.EVAP.AUT.AFP-GN | 1 | 2 | 2 |
| 69 | 12036513 | | TAPA BANDEJA EVAP. AUTOM. AFP.800 | TRAY COVER EVAP. AUTO. AFP.800 | 1 | 2 | 2 |
| 70 | 12038150 | | RESIST.EVAP.AUT.80W 3MT | RESIST.EVAP.AUT.80W 3MT | 1 | 1 | 1 |
| 70 | 12041467 | | RESIST.EVAP.AUT.80W 4MT | RESIST.EVAP.AUT.80W 4MT | | 1 | 1 |
| 71 | 12018649 | | CONDEN.ARRANQUE SC-117U5017 80 mF | CONDEN.ARRANQUE SC-117U5017 80 mF | | 1 | |
| 71 | 12033999 | | CONDEN.ARRANQUE TL-G 17U5014 60 mF | CONDEN.ARRANQUE TL-G 17U5014 60 mF | 2 | 1 | 2 |
| 73 | 12035096 | | RELE ARRANQUE COMPRESOR SC-12CL | RELE ARRANQUE COMPRESOR SC-12CL | | 1 | |
| 73 | 12034981 | | RELE ARRANQUE COMPRESOR TL-5G 6000 | RELE ARRANQUE COMPRESOR TL-5G 6000 | 2 | 1 | 2 |
| 80 | 12115884 | | UD.EV.AFP-700/800-C/P FRIO | UD.EV.AFP-700/800-C/P FRIO | 1 | 1 | 1 |
| 80 | 12083678 | | UD.EVAP.AF-802-C,1602C COMPACT | UD.EVAP.AF-802-C,1602C COMPACT | | 1 | |
| 80 | 12083674 | | UD.EVAP.AFP-802/2 INF. COMPACT | UD.EVAP.AFP-802/2 INF. COMPACT | | | 1 |