SIMAG

SNM 500

R 404 A VERSION

SPARE PARTS LIST

REV. 08/2012

Spare Parts Catalogue
SNM 500

1 - UNIT PANELS
2 - REFRIGERANT SYSTEM AIR COOLED
3 - REFRIGERANT SYSTEM WATER COOLED
4 - WATER SYSTEM AND INSULATIONS
5 - FREEZER AND GEAR REDUCER ASSY
6 - P.C. BOARD AND SENSORS ASSY

1 - UNIT PANELS

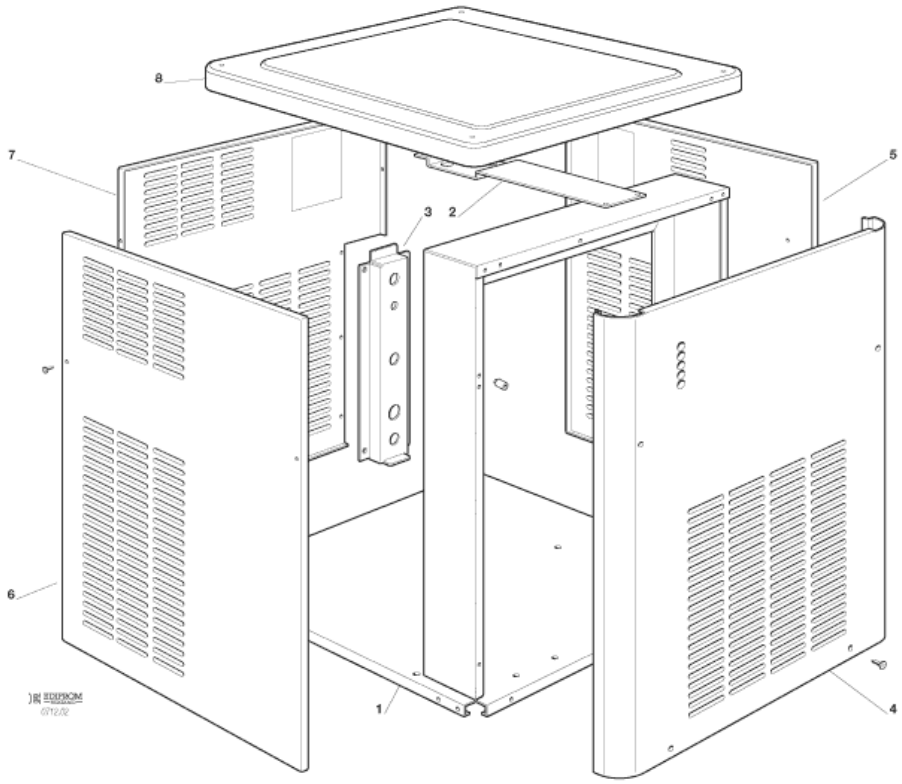

1 - UNIT PANELS

POSITION	CODE	DESCRIPTION
0001	781470 00	UNIT BASE
0001	781472 01	FRONT BRACKET
0002	781463 00	BRACKET
0003	702315 00	REAR BRACKET
0004	650624 04	LABEL
0004	650976 00	SIMAG LOGO
0004	650976 34	SNM 500 LABEL
0004	722284 00	FRONT PANEL
0005	722271 02	RIGHT SIDE PANEL
0006	722272 02	LEFT SIDE PANEL
0007	722273 02	REAR PANEL
0008	660873 00	TOP PANEL

2 - REFRIGERANT SYSTEM AIR COOLED

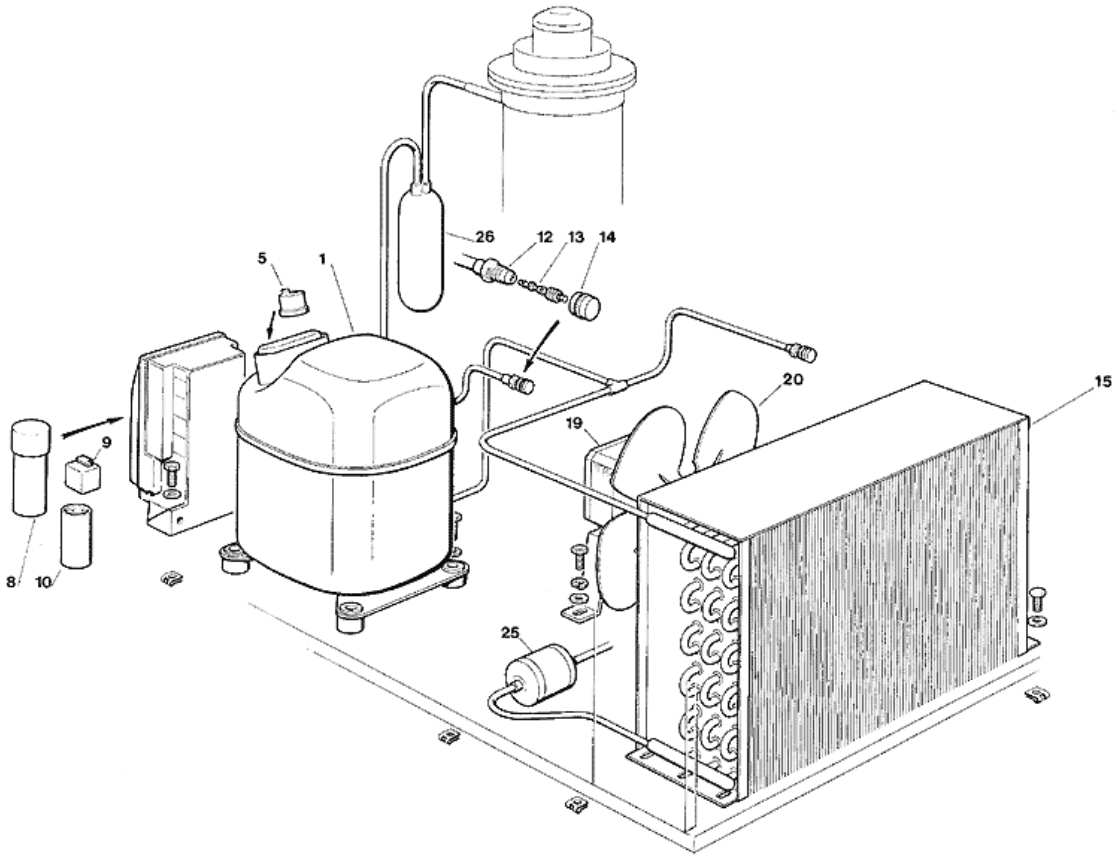

2 - REFRIGERANT SYSTEM AIR COOLED

POSITION	CODE	DESCRIPTION
0001	670099 05	COMPRESSOR - 230/50/1
0001	670099 13	COMPRESSOR 230/60/1
0005	620058 57	PROTECTOR - 230/50/1
0005	620058 85	PROTECTOR - 230/60/1
0008	620167 54	CAPACITOR - 35 MFD/450V
0009	620057 47	RELAY - 230/50
0009	620057 54	RELAY - 230/60
0010	620167 00	START CAPACITOR 88-108MFD/330V
0012	650109 00	VALVE BODY
0013	670012 00	VALVE CORE
0014	650106 00	CAP
0015	620438 00	CONDENSER
0019	620419 07	FAN MOTOR - 230/50-60
0019	620419 66	FAN MOTOR BRACKET
0020	620419 36	FAN BLADE
0025	670006 01	FILTER
0026	784450 03R	SUCTION LINE/ACCUMULATOR

3 - REFRIGERANT SYSTEM WATER COOLED

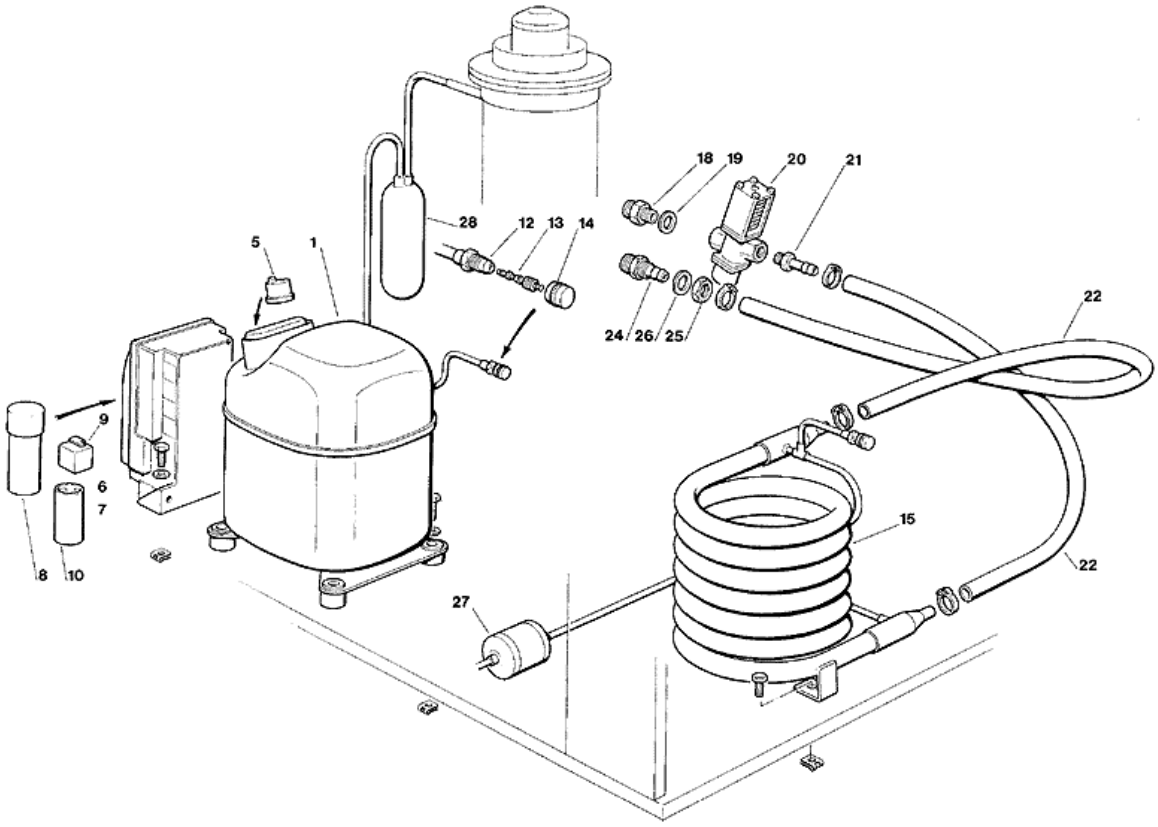

3 - REFRIGERANT SYSTEM WATER COOLED

POSITION	CODE	DESCRIPTION
0001	670099 05	COMPRESSOR - 230/50/1
0001	670099 13	COMPRESSOR 230/60/1
0005	620058 57	PROTECTOR - 230/50/1
0005	620058 85	PROTECTOR - 230/60/1
0008	620167 54	CAPACITOR - 35 MFD/450V
0009	620057 47	RELAY - 230/50
0009	620057 54	RELAY - 230/60
0010	620167 00	START CAPACITOR 88-108MFD/330V
0012	650109 00	VALVE BODY
0013	670012 00	VALVE CORE
0014	650106 00	CAP
0015	620495 00	WATER COOLED CONDENSER
0018	733204 00	WATER INLET FITTING
0019	400031 01	WASHER
0020	620111 00	WATER REGUL. VALVE
0021	733173 01	FITTING
0022	281900 03	TUBE 18X12
0024	733174 00	FITTING
0025	400076 00	NUT
0026	400031 00	WASHER
0027	670006 01	FILTER
0028	784450 03R	SUCTION LINE/ACCUMULATOR

4 - WATER SYSTEM AND INSULATIONS -

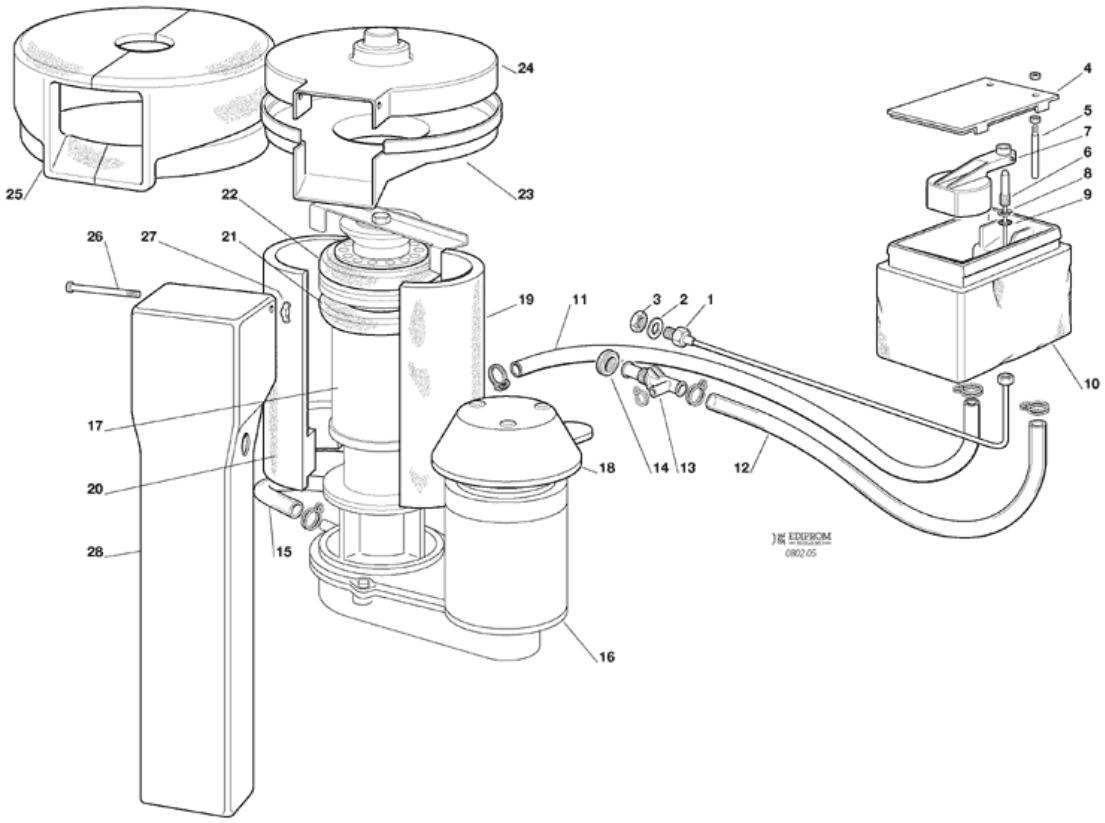

4 - WATER SYSTEM AND INSULATIONS -

POSITION	CODE	DESCRIPTION
0001	651206 01	WATER FITTING - 1/4"-1/8 BSPT
0002	651224 04	WATER FITTING
0003	650104 00	FILTER
0003	660956 00	PLASTIC WATER INLET FITTING
0004	660363 00	COVER
0005	724215 06	WATER LEVEL METAL PIN
0006	660957 00	PLASTIC NOZZLE
0007	660585 00	FLOAT VALVE
0009	640100 00	O RING
0010	660352 00	INSULATION
0010	660459 00	WATER RESERVOIR ONLY
0011	281822 00	PLASTIC HOSE
0012	281832 00	TUBE
0013	660224 00	TEE TUBE
0014	660535 00	PLASTIC NUT
0015	610171 02	TUBE
0016	794215 08R	GEAR REDUCER ASSY
0017	794309 00R	FREEZER ASSY
0018	660553 00	GEAR MOTOR COVER
0019	060551 06	KIT INSULATION, FREEZER
0020	060551 06	KIT INSULATION, FREEZER
0021	650919 01	ICE BREAKER BOTTOM INSULATION
0022	650919 02	ICE BREAKER TOP INSULATION
0023	660896 00	ICE SPOUT - BOTTOM
0024	660897 00	ICE SPOUT - TOP
0025	650919 00	ICE SPOUT INSULATION
0026	724180 02	TIE ROAD
0027	430083 00	NUT
0028	660933 03	ICE CHUTE

5 - FREEZER AND GEAR REDUCER ASSY -

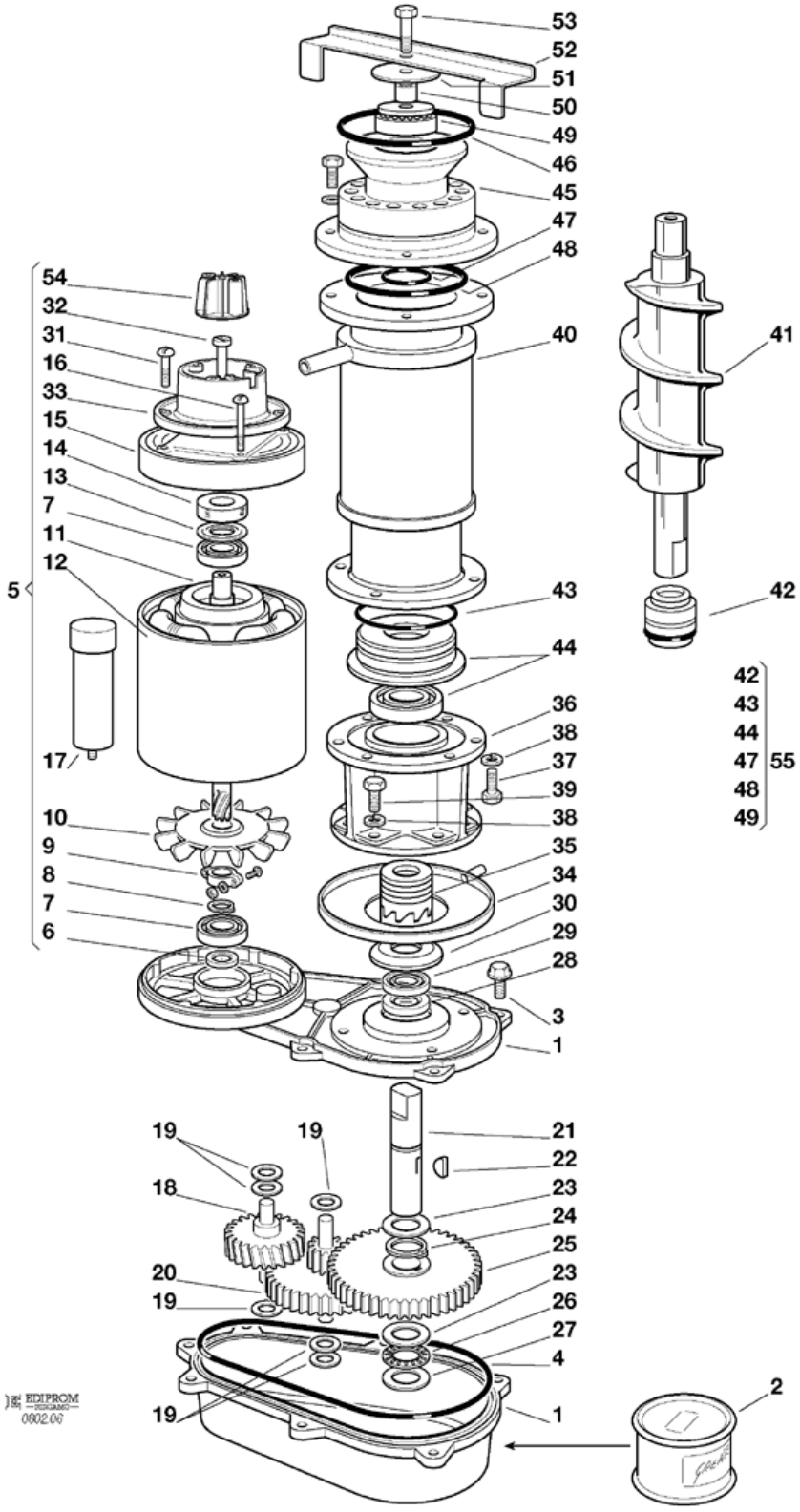

5 - FREEZER AND GEAR REDUCER ASSY -

POSITION	CODE	DESCRIPTION
0001	0A031230 01	GEAR CASE
0002	060294 01	GREASE
0003	03001251 01	SCREW 5/16-18X1
0004	13000617 38	O RING
0005	060273 06	MOTOR ONLY MFB
0006	02001606 00	OIL SEAL
0007	651053 00	BEARING
0008	441800 04	WASHER
0009	650341 00	BRACKET
0010	650340 00	FAN
0011	794216 00R	ROTOR ASSY
0012	620295 00	STATOR
0013	460041 00	RING
0014	640095 01	RUBBER INSERT
0015	650339 00	COVER
0016	400078 00	CONNECTOR
0017	620520 01	CAPACITOR
0018	651156 00	GEAR
0019	03001408 24	WASHER
0020	651157 00	GEAR
0021	651159 00	SHAFT
0022	03001364 00	KEY
0023	02001681 00	TRUST WASHER
0024	03001363 00	CLIP RING
0025	651158 00	GEAR
0026	02001680 00	TRUST BEARING
0027	02001679 00	TRUST WASHER
0028	02001607 01	OIL SEAL
0029	02002853 01	OIL SEAL
0030	13000709 02	RUBBER GASKET
0031	400078 00	CONNECTOR
0032	03001403 77	SCREW
0033	650515 01	MOTOR COVER
0034	640000 00	GASKET
0034	660755 00	DRIP PAN
0035	060359 01	KIT COUPLING
0036	764007 00	BRACKET
0037	420019 00	SCREW
0038	440015 04	WASHER
0039	429701 00	SCREW
0040	784456 02	WORM TUBE -
0041	650921 00	AUGER - MFNS
0042	650402 00	WATER SEAL
0043	640093 00	O RING
0044	060688 00	BOTTOM BEARING/RETAINER KIT
0045	651317 00	ICE BREAKER
0046	640041 33	O RING
0047	640109 00	X RING
0048	640093 03	O RING
0049	263612 00	GREASE
0049	651058 00	BEARING
0050	650998 00	COLLAR
0051	724443 00	WASHER
0052	724410 00	ICE SWEEP
0053	423915 01	SCREW
0054	784476 01	MAGNETO ASSY
0055	060692 01	KIT BEARING + SEAL

6 - P.C. BOARD AND SENSORS ASSY -

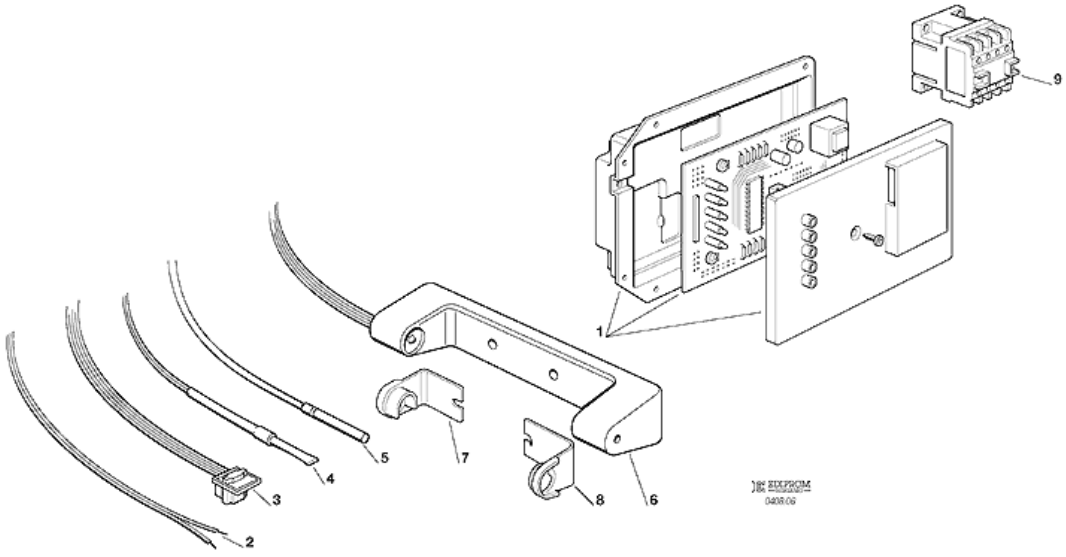

6 - P.C. BOARD AND SENSORS ASSY -

POSITION	CODE	DESCRIPTION
0001	620462 15	PC BOARD
0002	620519 02	WATER LEVEL SENSOR
0003	620404 03	HALL SENSOR
0004	620519 00	CONDENSER SENSOR
0005	620519 01	EVAPORATOR SENSOR
0006	650674 01	ICE LEVEL CTL.
0007	660720 00	PLASTIC COVER
0008	660720 01	PLASTIC COVER
0009	630148 00	CONTACTOR