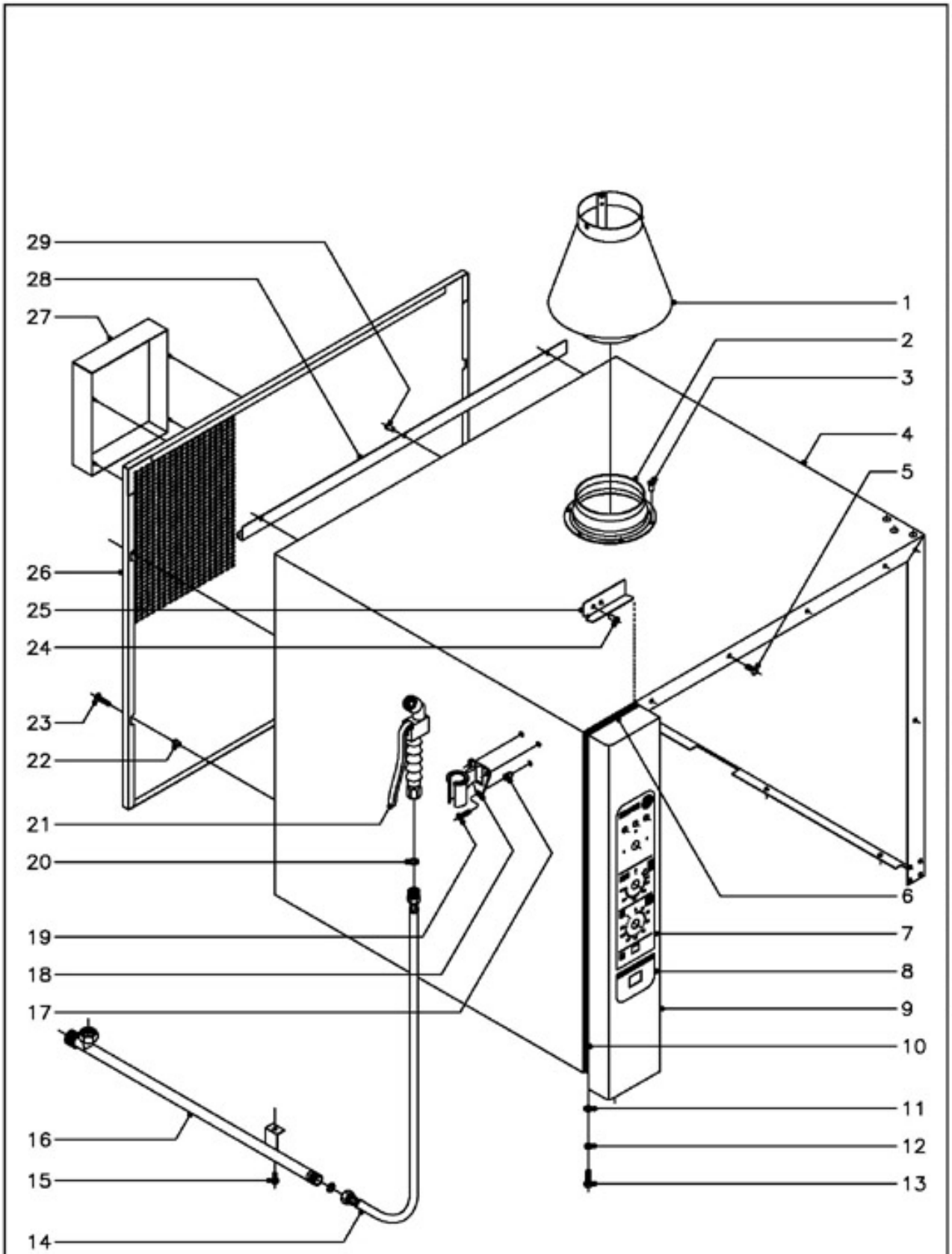

1	R272612
	R292646
	R272614
	Q412002
2	R292645
3	Q412000
4	T082805
4	T012806
4	T022801
5	Q152017
6	3715400
7	T013006
8	R723008
9	T082810
9	T012809
10	3715400
10	3715400
11	Q232040
12	Q262040
13	Q012042
14	R095006
15	Q012042
16	R675002
16	R685003
17	Q221342
18	R095007
19	Q042022
20	-
21	R095005
22	Q221342
23	Q152038
24	Q412002
25	R662811
26	T072903
26	R722909
26	R732902
27	T082808
28	R672811
28	R682806
29	Q412002

N plano	Firma	Fecha	Aparato	MUEBLE	Lamina	
C-1339		5-2003	HORNOS A GAS HCG-6/11,10/11,10/21		1	Fagor Industrial S.Coop. FAGOR Oñate

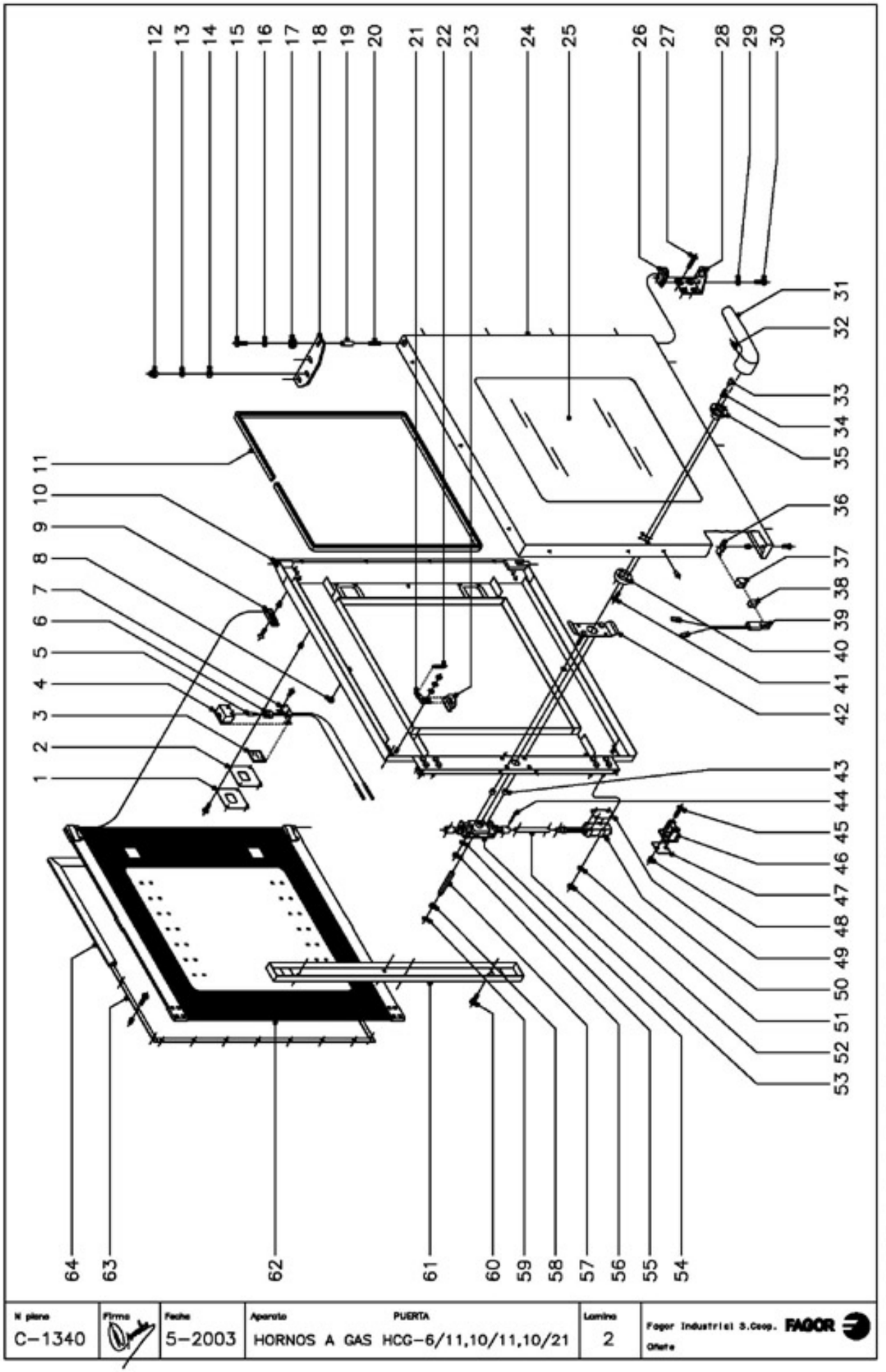

N plano C-1340	Firma	Fecha 5-2003	Aparato PUERTA HORNOS A GAS HCG-6/11,10/11,10/21
Lamina 2	Fagor Industrial S.Coop. FAGOR	Offset	

1	R670608
	Q032021
	Q222041
2	R670609
3	R670618
4	R670610
5	R663013
6	R663058
7	R670611
	Q042031
8	R670617
9	R670615
	Q042032
	Q222011
10	T080500
10	T110500
10	T120500
11	3715200
11	3715200
11	3715200
12	Q212051
13	Q242050
14	Q302025
15	Q012042
16	Q242040
17	R662807
18	T130500
19	R660534
20	Z850519
21	R670612
	Q302022
	Q242040
	Q162040
22	R660605
23	R670613
24	R660600
24	R670600
24	R680600
	Q412002
25	R660606
25	R670625
25	R680609
26	R660549
27	Q062040
28	R660551
29	Q242040
30	Q012041
31	T130502
32	Q132042
33	T130507
34	T130506
35	T130515
36	T130513
37	Z200507

38	Z200506
39	Z100522
40	T130514
41	Q032032
42	T130511
43	Z608410
44	Q352001
45	Q042043
46	R260545
47	R660538
48	Q221343
49	T080503
50	T080504
51	Q262040
52	Q162040
53	R020502
54	T130509
55	Q262040
56	Q162040
57	T130508
58	T130505
59	Q271033
60	Q032031
60	Q032021
61	T080502
61	T110502
62	1100002806
62	1100002807
62	1100002808
63	R660526
63	R670513
63	R680511
	Q033021
	Q222041
64	R660503
64	R670500
64	R680500

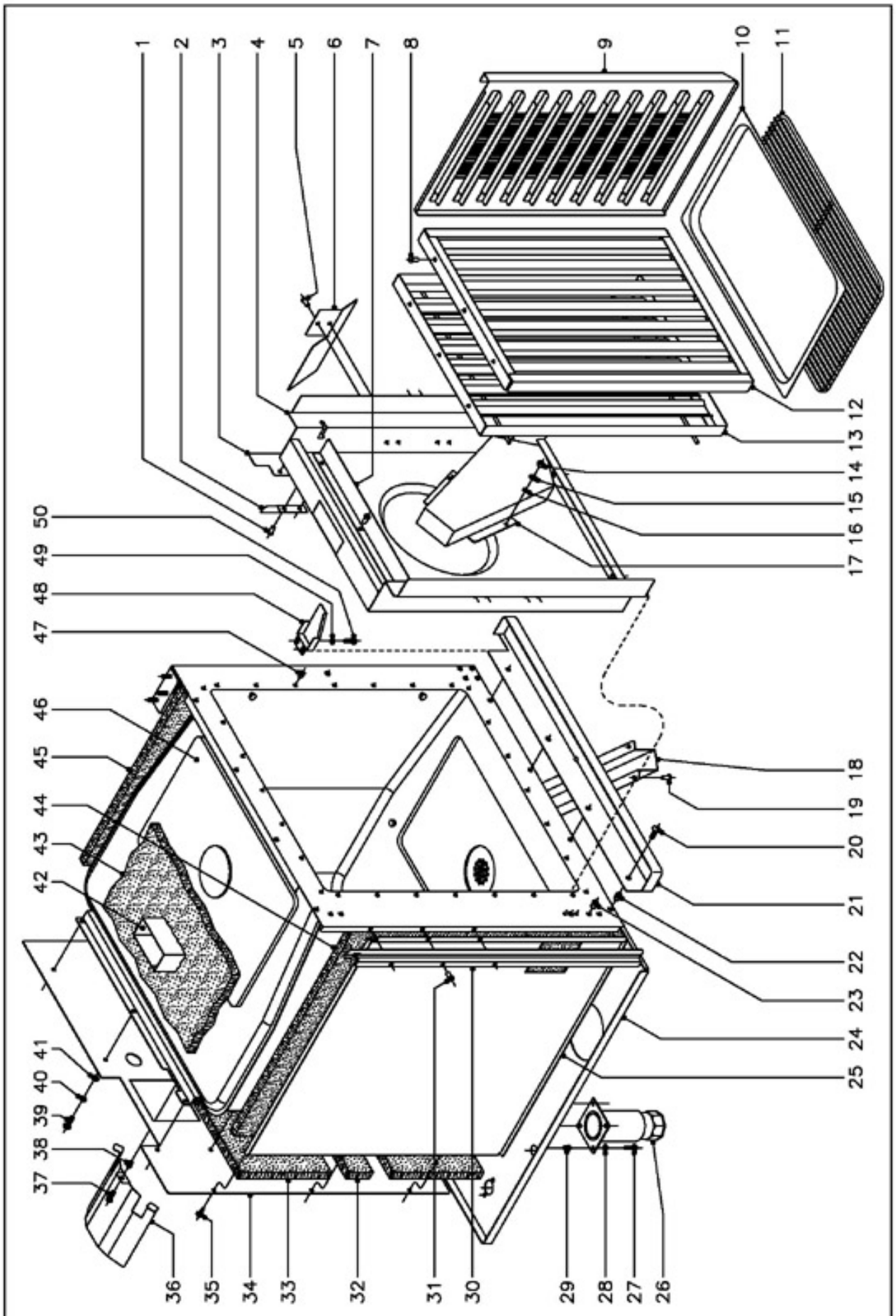

1	Q412002
2	R292647
3	R662648
s/n	R662647
4	T082602
4	T012602
4	T022605
5	Q412002
6	T012611
7	T012612
	Q412002
8	Q412002
9	R662668
s/n	R662670
9	T112615
s/n	T112617
9	T122614
s/n	T122616
10	R252816
10	R032605
11	R672665
11	R682676
12	R662617
12	R092618
13	R662622
13	R092621
14	Q162030
15	Q242030
16	Q232030
17	T082604
17	T012607
18	R672804
18	R682805
19	Q412002
20	Q152017
21	T112813
21	T122811
22	Q221343
23	Q221343
24	R722900
24	R732900
25	T072614
25	T112624
25	T122619
26	X260151
27	Q012031
28	Q242030
29	Q221342

30	R662682
30	R672674
31	Q412002
32	R662616
33	R672631
33	R032625
34	T072705
34	T112607
34	T122604
35	Q151301
36	R142628
s/n	R142614
37	Q012042
38	Q221343
39	Q012042
40	Q262040
41	Q232040
42	T012605
	Q412002
43	R662614
43	R682623
44	R662613
44	R672630
44	R682623
45	R662613
45	R672630
45	R682623
46	T082610
46	T012615
46	T022608
47	Q221341
48	R662800
49	Q232030
50	Q012031

N plano	Firma	Fecha	Aparato	Lamina	
C-1341		5-2003	MUEBLE INTERIOR HORNOS A GAS HCG-6/11,10/11,10/21	3	Fagor Industrial S.Coop. Oñate

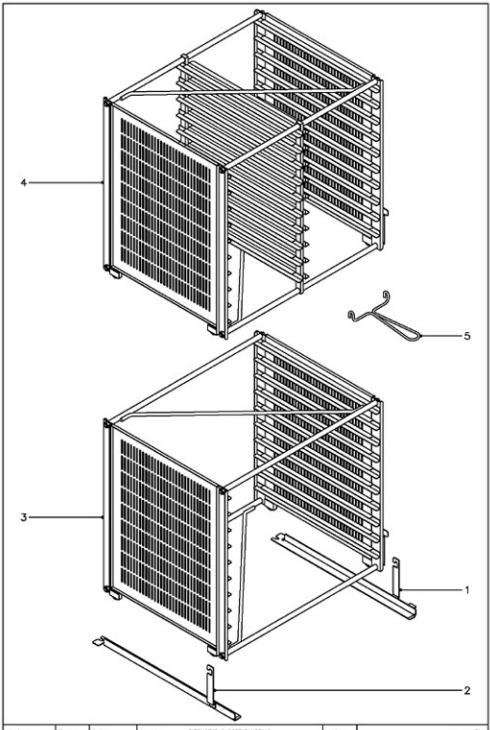

N plano	Firma	Fecha	Aparato	Lamina
C-1342		5-2003	EXTRUCTURAS PORTABANDEJAS HORNOS A GAS HCG-10/11,10/21	4

Fagor Industrial S.Coop. FAGOR
OÑATE

ITEM	CODIGO	DENOMINACION	TEXTO	HCG-10/11	HCG-10/21	HCG-2-10/11
1100002931		KIT EXTRUCTURA PORTABANDE. 10/11		OP.	-	-
1	R672623	Rail derecho		OP.	-	-
2	R672622	Rail izquierdo		OP.	-	-
3	R672617	Extructura portabandejas 10/11		OP.	-	-
5	R672632	Tirador de extructura		OP.	-	-
1100002934		KIT EXTRUCTURA PORTABANDE. 10/21		-	OP.	-
1100002935		KIT EXTRUCTURA PORTABANDE. 2-10/11		-	-	1
1	R682659	Rail derecho		-	OP.	1
2	R682658	Rail izquierdo		-	OP.	1
3	R682617	Extructura portabandejas 10/21		-	OP.	-
4	R682618	Extructura portabandejas 2-10/11		-	-	1
5	R672632	Tirador de extructura		-	OP.	1

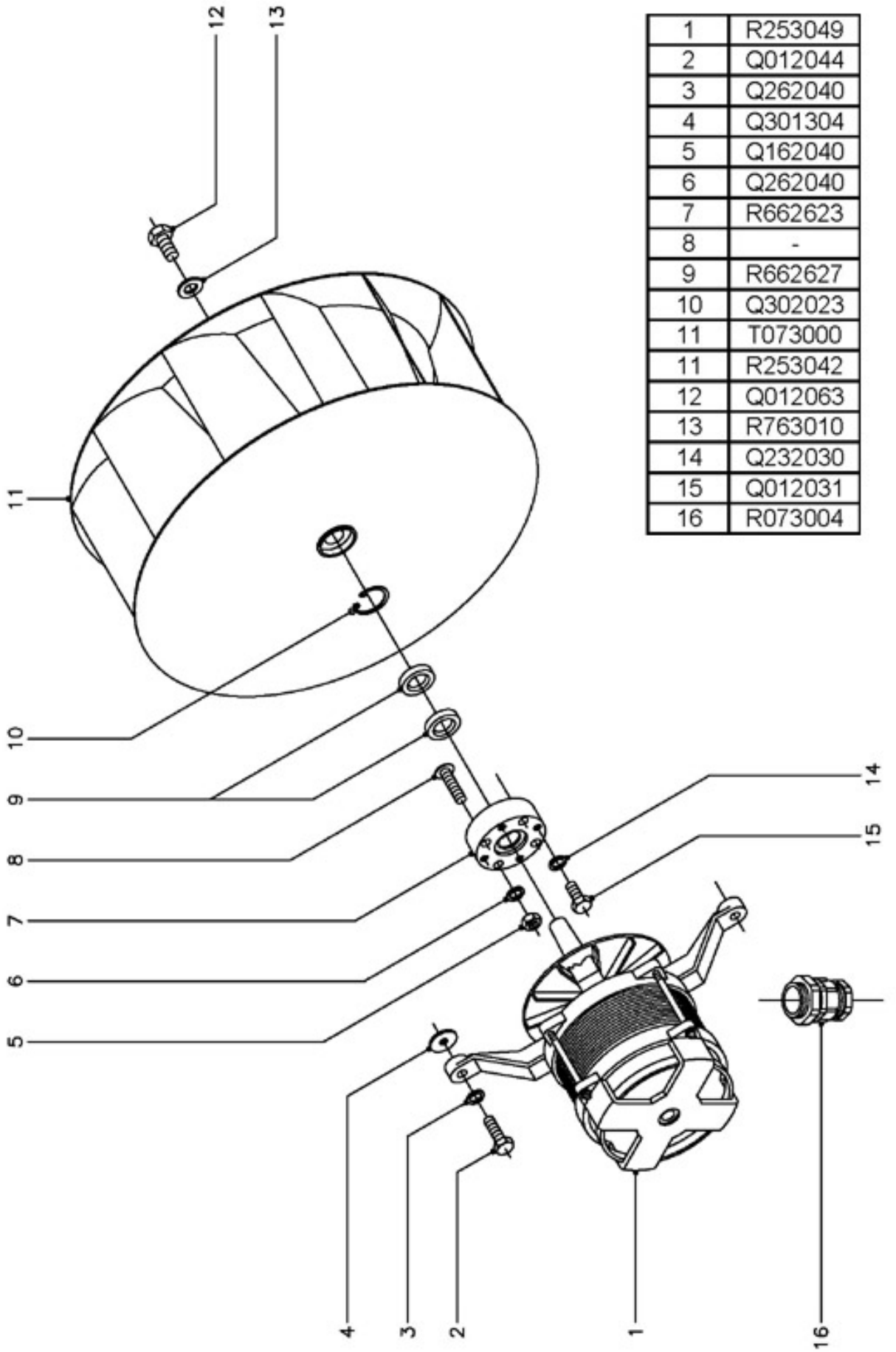

1	R253049
2	Q012044
3	Q262040
4	Q301304
5	Q162040
6	Q262040
7	R662623
8	-
9	R662627
10	Q302023
11	T073000
11	R253042
12	Q012063
13	R763010
14	Q232030
15	Q012031
16	R073004

Nº plano	Firma	Fecha	Aparato		Lamina	
C-1343		5-2003	HORNOS A GAS HCG-6/11,10/11,10/21	TURBINA	5	Fagor Industrial S.Coop. Oñate FAGOR

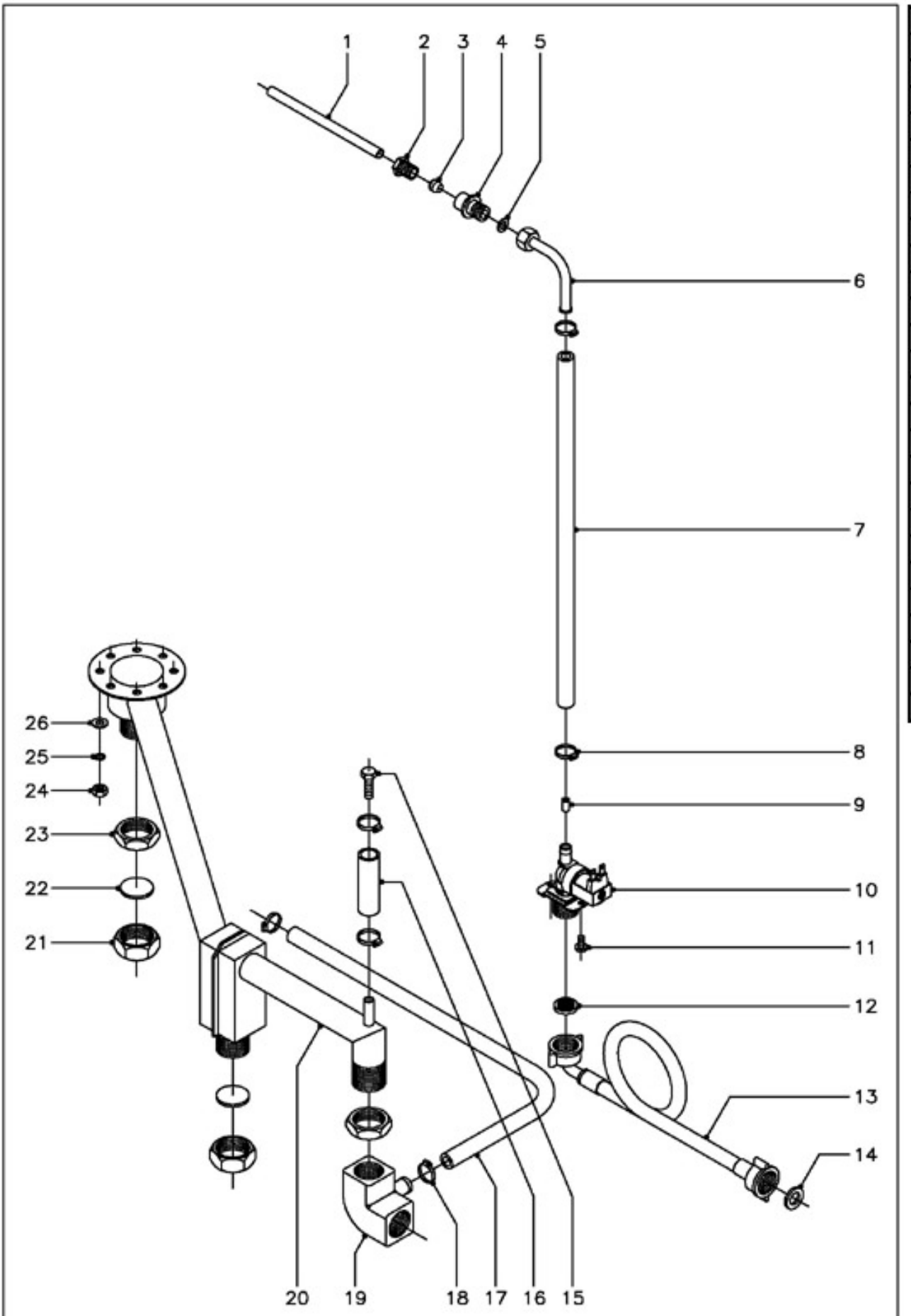

1	R020502
2	R695003
3	R695004
4	-
5	Q306026
6	R695017
7	3676900
8	Q881302
9	R665041
10	Z701135
11	Q032021
12	Z701132
13	Z601114
14	Q307031
15	Q012053
16	3676900
17	3715600
18	Q881304
19	R665067
20	R725004
20	R735004
21	R665053
22	R015011
23	Q223014
24	Q162040
25	Q262040
26	Q232040

N plano	Firma	Fecha	Aparato	Lamina	
C-1344		5-2003	CIRCUITO DE AGUA HORNOS A GAS HCG-6/11,10/11,10/21	6	Fagor Industrial S.Coop. FAGOR Oñate

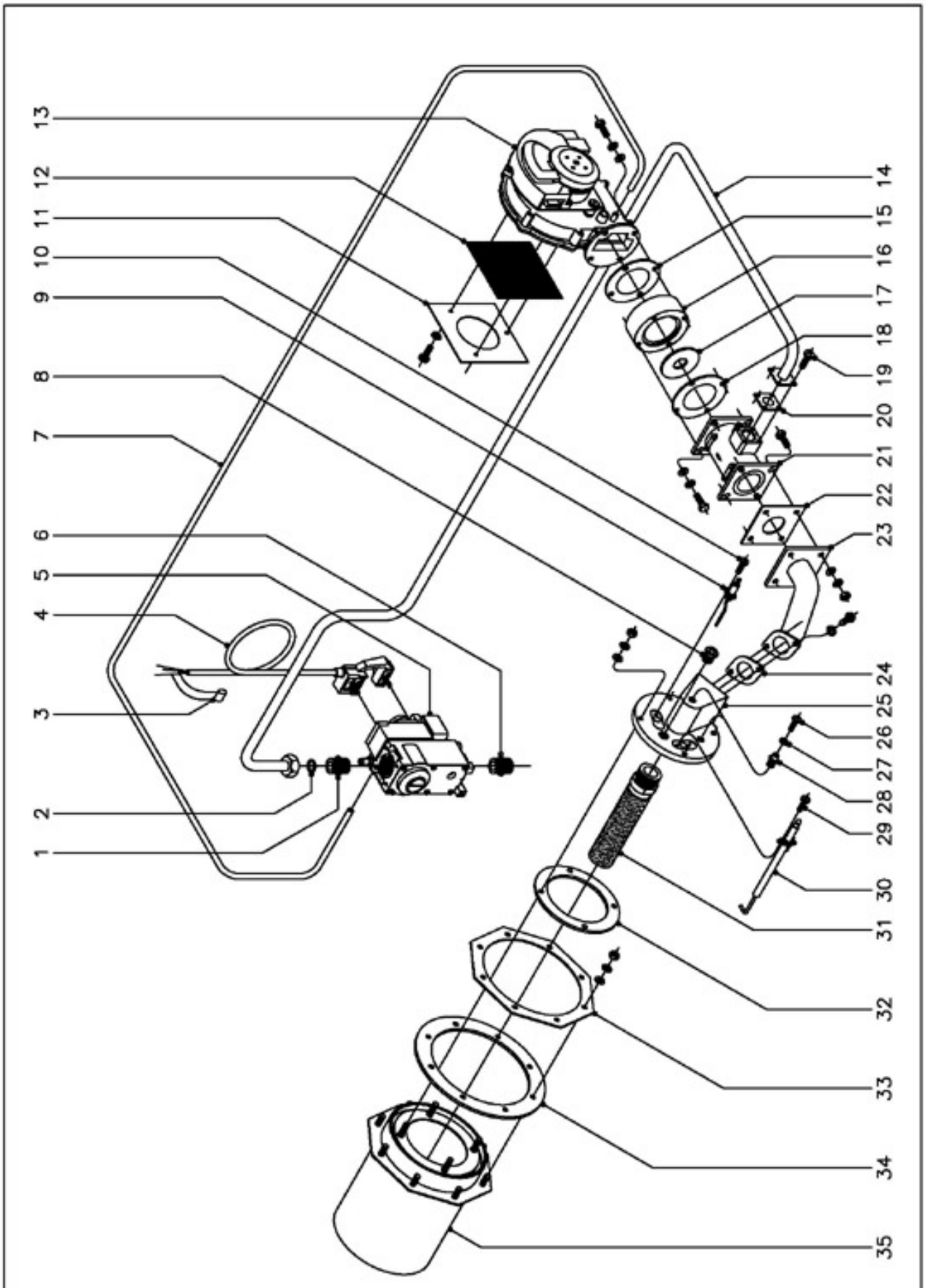

1	S205023
2	Q306012
3	Z233012
4	T085012
5	T085010
5	T085011
5	T115097
5	T115098
5	T085016
5	T085017
5	T115100
5	T115101
6	S205023
7	3702400
8	R725015
9	T115712
10	Q153021
11	T115096
	Q032021
	Q242020
12	T115095
13	T083000
14	T015000
14	T025000
15	T115081
16	T115076
17	T085018
17	T115082
17	T115083

18	T115081
19	Q032021
20	T115080
21	T085007
21	T115075
22	T115079
23	T115077
24	T095021
25	T085715
25	T115782
26	Q152024
27	R725061
28	R725017
29	Q153021
30	T085714
30	T115781
31	T085710
31	T115710
32	T075013
32	R725055
33	-
34	T075014
34	R725051
35	T085713
35	T015700
	Q232040
	Q262040
	Q163040

N plano	Firma	Fecha	Aparato	Lamina	
C-1345		5-2003	PARTE FUNCIONAL GAS HORNOS A GAS HCG-6/11,10/11,10/21	7	Fagor Industrial S.Coop. FAGOR Oñate

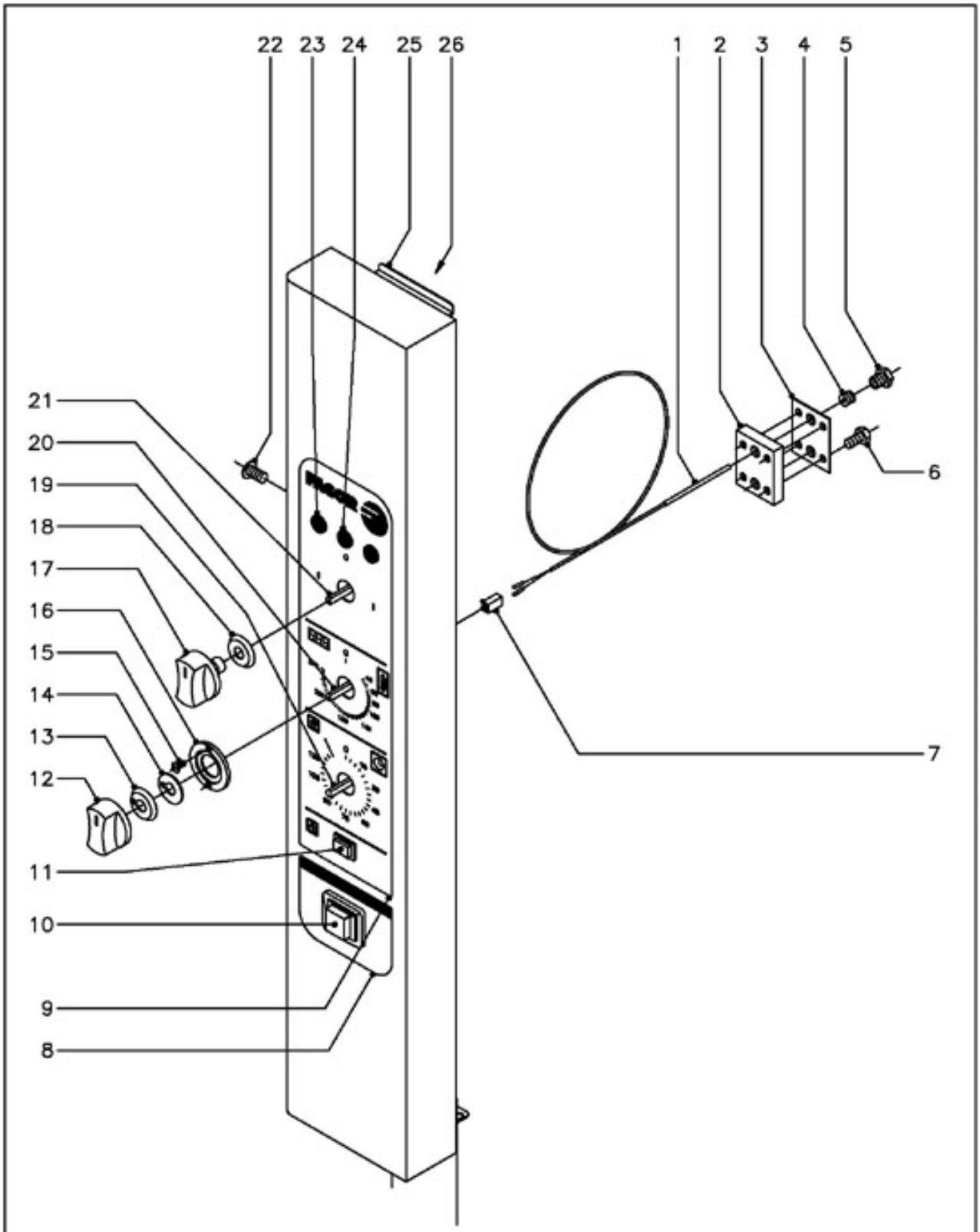

1	R663090
2	R662659
3	R692811
4	R662652
5	R662629
6	Q012021
7	R663092
8	R723008
9	T013006
10	Z213033
11	R663032
12	R663063
13	R663045
14	R662810
15	Q151346
16	R662809
17	R663062
18	R663046
19	R723000
20	R743013
	R663036
21	T013001
22	Q152004
23	R693056
24	R693055
25	T082810
25	T012809
26	T012803

N plano	Firma	Fecha	Aparato	Lamina
C-1346		5-2003	PARTE ELECTRICA PORTAMANDOS HORNOS A GAS HCG-6/11,10/11,10/21	8

Fagor Industrial S.Coop. FAGOR
Onate

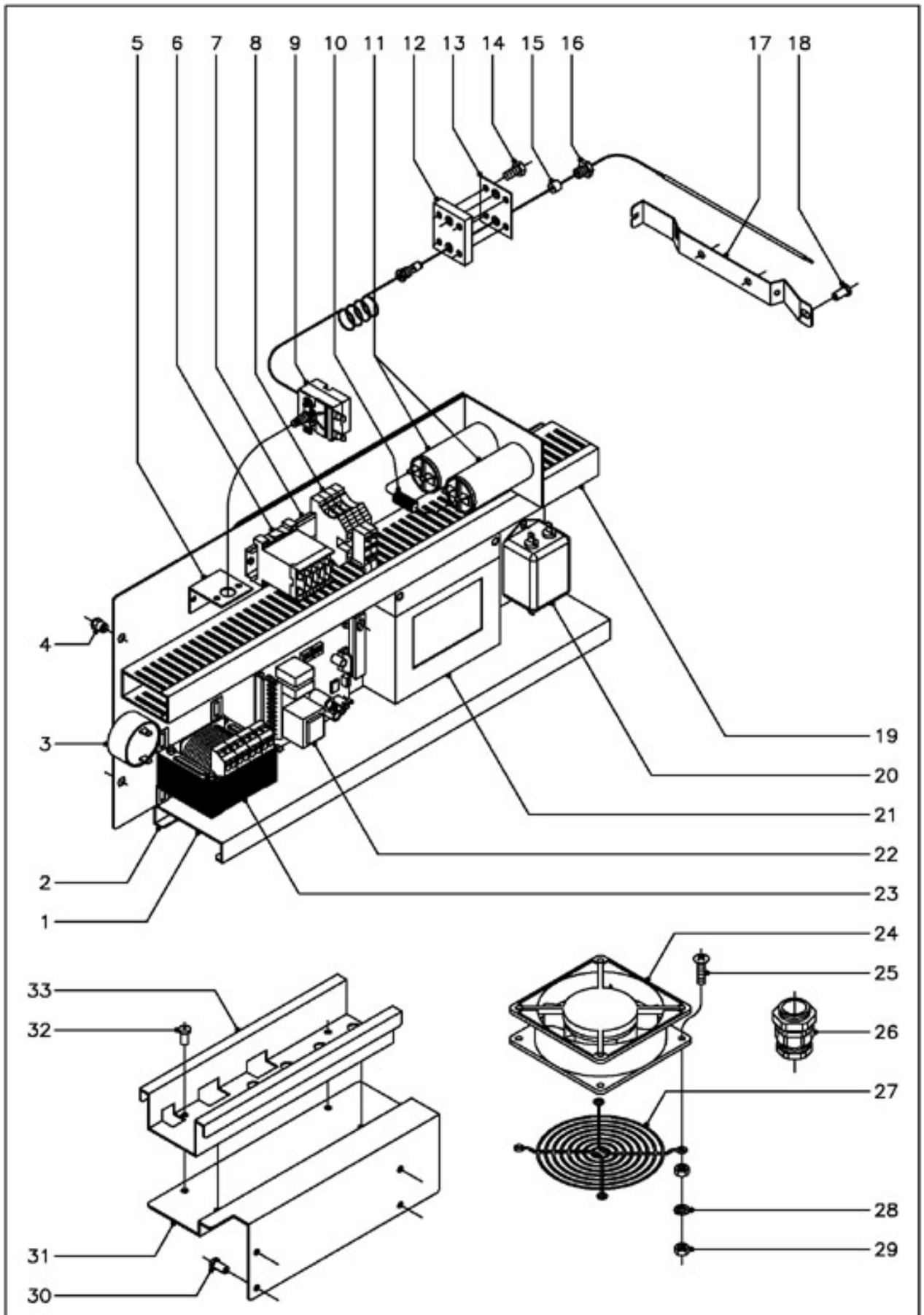

1	T083003
2	R723101
	Q412002
3	R693067
4	Q221342
5	R343039
6	Z683087
7	R663055
8	R073005
	R723015
	P453026
	Z263303
9	R243016
	Q162050
10	R073008
11	R293000
12	R662659
13	R692811
14	Q012021
15	R662662
16	R662629
17	R662630
18	Q412002
19	3715520
20	T113023
21	Z953004
22	T083002
	T133007
	T133008

	Q161310
23	R503005
24	Z103066
25	Q042022
26	R073004
27	T113015
28	Q242020
29	Q162020
30	Q411304
31	T083004
32	Q411304
33	R342821

		BUTANO - PROPANO 50 Hz.
5	T085010	Valvula Honeywell 50Hz. (B.P.)
5	T115097	Valvula Honeywell 50Hz. (B.P.)
17	T085013	Arandela regulacion ventilador Ø14
17	T115082	Arandela regulacion ventilador Ø18
		BUTANO - PROPANO 60 Hz.
5	T085016	Valvula Honeywell 60Hz. (B.P.)
5	T115100	Valvula Honeywell 60Hz. (B.P.)
17	T085013	Arandela regulacion ventilador Ø14
17	T115082	Arandela regulacion ventilador Ø18
		GAS NATURAL 50 Hz.
5	T085011	Valvula Honeywell 50Hz. (G.N.)
5	T115098	Valvula Honeywell 50Hz. (G.N.)
17	T085013	Arandela regulacion ventilador Ø14
17	T115083	Arandela regulacion ventilador Ø20
		GAS NATURAL 60 Hz.
5	T085017	Valvula Honeywell 60Hz. (G.N.)
5	T115101	Valvula Honeywell 60Hz. (G.N.)
17	T085013	Arandela regulacion ventilador Ø14
17	T115083	Arandela regulacion ventilador Ø20

N plano	Firma	Fecha	Aparato	Lamina	
C-1347		5-2003	PANEL CUADRO ELECTRICO HORNOS A GAS HCG-6/11,10/11,10/21	9	Fagor Industrial S.Coop. FAGOR Oñate