SIMAG

Electronic modular cuber

SV 385

SPARE PARTS LIST
CATALOGO RICAMBI
CATALOGUE PIÈCES DÉTACHÉES
ERSATZTEILENKATALOG

090090.29 REV. 07/2006

PAGE PAGINA PAGE SEITE	TABLE OF CONTENTS	INDICE	TABLE DES MATIÉRES	INHALTVERZEICHNIS
1	TABLE OF CONTENTS	INDICE	TABLE DES MATIÉRES	INHALTVERZEICHNIS
2-3	CABINET ASSY	ASSIEME MOBILE	ENSEMBLE CAROSSERIE	AUSSENWANDE
4-5	REFRIGERANT SYSTEM AIR COOLED	SISTEMA REFRIGERANTE RAFFR. AD ARIA	CIRCUIT FRIGORIFIQUE REFROID. A AIR	GEFRIERSYSTEM LUFTGEKÜHLT
6-7	REFRIGERANT SYSTEM WATER COOLED	SISTEMA REFRIGERANTE RAFFR. AD ACQUA	CIRCUIT FRIGORIFIQUE REFROID. A EAU	GEFRIERSYSTEM WASSERGEKÜHLT
8-9	ICE MAKING SYSTEM	GRUPPO EVAPORATORE	GROUP EVAPORATEUR	VERDAMPFER
10-11	P.C. BOARD AND SENSORS ASSY	SCHEDA ELETTRONICA E SENSORI	ENS. CARTE ELECTRONIQUE ET DETECTEURS	ELEKTRONISCHE PLATINE UND TEMPERRATURFUEHLERENHEIT

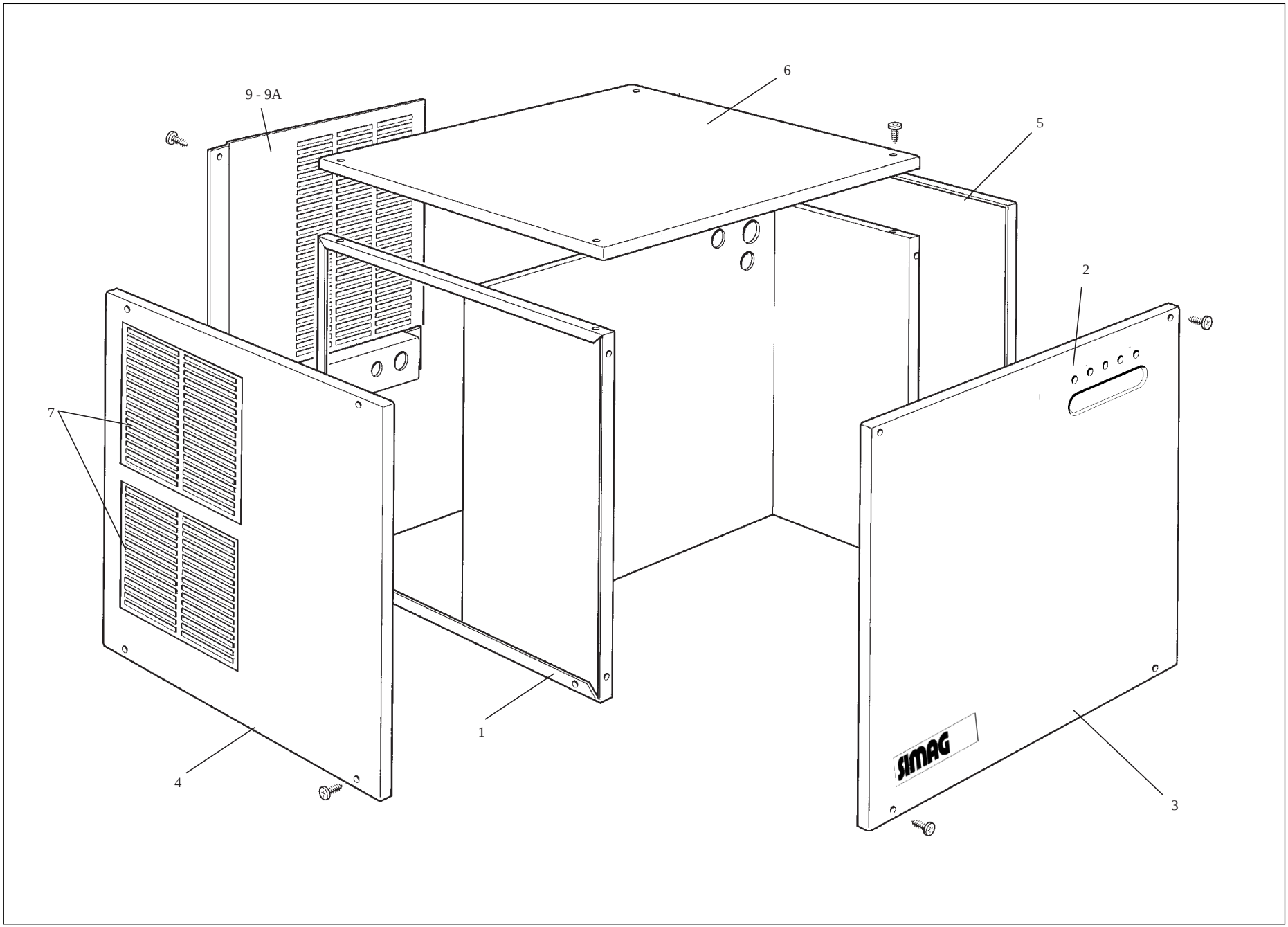
9 - 9A
6
5
2
7
1
4
3
SIMAG

SV 385 - CABINET ASSY - ASS. MOBILE - ENSEMBLE CAROSSERIE - AUSSENWAENDE

ITEM NO POS NO REP. NO REF. NO	PART NO CODICE REFERENCE STUECK NR	DESCRIPTION	DESCRIZIONE	DESIGNATION	BESCHREIBUNG
1	CM 81453951	UNIT FRAME	ASSIEME TELAIO	ENS. CHASSIS	GEHAUSETEILE
2	CM 19262938	LABEL, MONITORING PANEL	ETICHETTA, LED	ETIQUETTE, LED	AUFKLEBER, LED
3	CM 81453978	PANEL, FRONT	PANNELLO FRONTALE	PANNEAU AVANT	VORDERWAND
4	CM 25330849	PANEL, LEFT SIDE	PANNELLO LAT. SX	PANNEAU GAUCHE	LINKSWAND
5	CM 25330848	PANEL, RIGHT SIDE	PANNELLO LAT. DX	PANNEAU DROITE	RECHTSWAND
6	CM 81453600	PANEL, TOP	PANNELLO SUPERIORE	PANNEAU DESSUS	ABDECKHAUBE
7	CM 28295031	GRILL PLASTIC	GRIGLIA IN PLASTICA	GRILLE EN PLASTIQUE	PLASTIKGRILL
9	CM 25550849	PANEL, REAR - AIR COOLED	PANNELLO POSTERIORE - ARIA	PANNEAU ARRIERE - AIR	RUECKWAND - LUFT
9A	CM 25550855	PANEL, REAR - WATER COOLED	PANNELLO POSTERIORE - ACQUA	PANNEAU ARRIERE - EAU	RUECKWAND - WASSER
*	CM 19262938	LABEL SV 385	ETICHETTA SV 385	ETIQUETTE SV 385	AUFKLEBER SV 385
*	CM 19262781	LABEL SIMAG	ETICHETTA SIMAG	ETIQUETTE SIMAG	AUFKLEBER SIMAG
		* NOT SHOWN	* NON MOSTRATO	* PAS MONTRÉ	* NIGHT ABGEBILDET

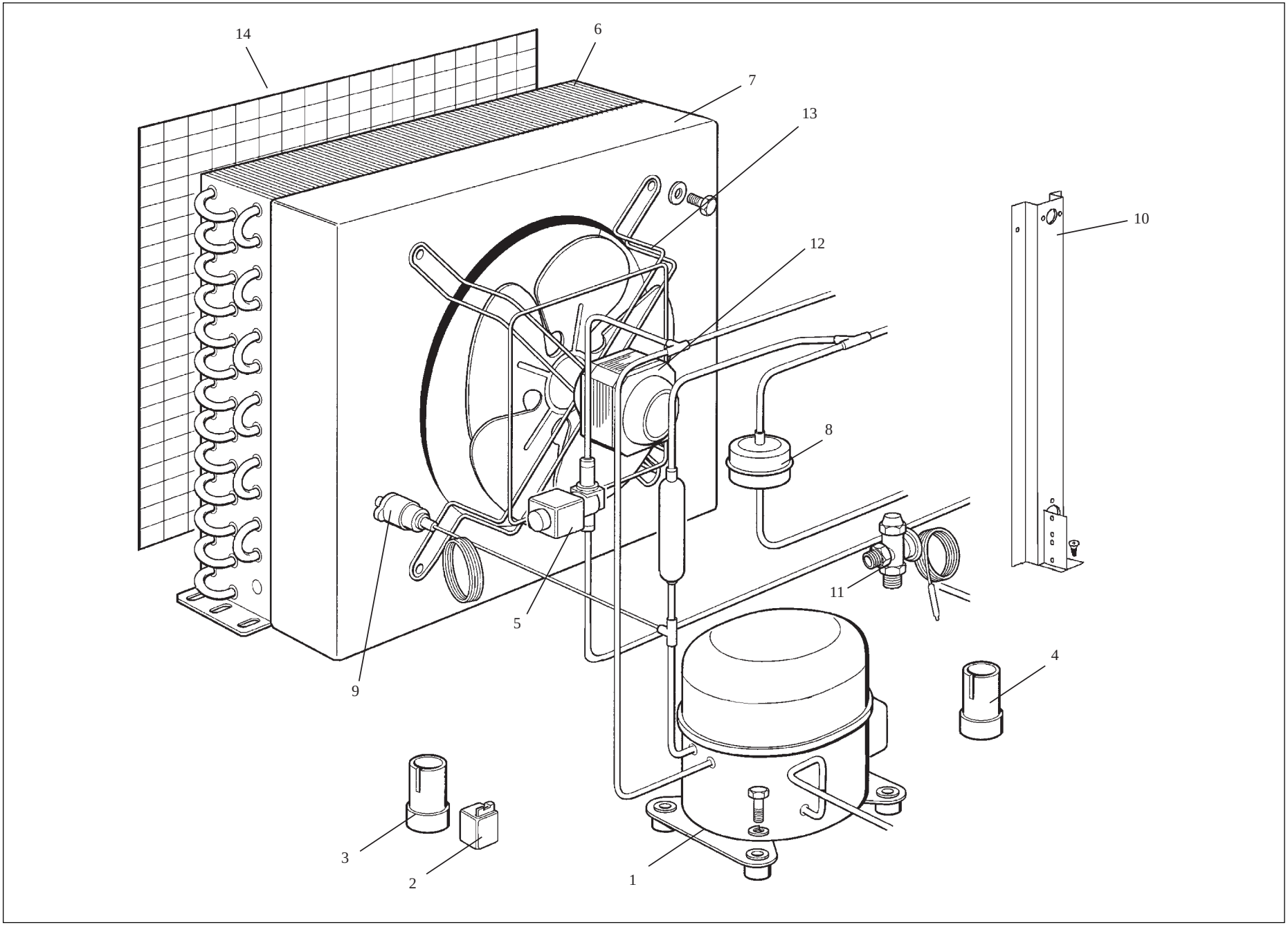
14
6
7
13
12
10
8
11
5
9
4
3
2
1

SV 385 - REFRIGERANT SYSTEM AIR COOLED - SISTEMA REFRIGERANTE RAFFR. AD ARIA
CIRCUIT FRIGORIFIQUE REFROID. PAR AIR - LUFTGEKÜHLTE GEFRIERSYSTEM

ITEM NO POS NO REP. NO REF. NO	PART NO CODICE REFERENCE STUECK NR	DESCRIPTION	DESCRIZIONE	DESIGNATION	BESCHREIBUNG
1	CM 19165604 CM 33675118	COMPRESSOR - 400/50/3 PROTECTOR - 230/50/1 PROTECTOR - 230/60/1 CRANKCASE HEATER	COMPRESSORE - 400/50/3 PROTETTORE - 230/50/1 PROTETTORE - 230/60/1 RESISTENZA CARTER	COMPRESSEUR - 400/50/3 PROTECTEUR - 230/50/1 PROTECTEUR - 230/60/1 RECHAUFFEUR CARTER	KOMPRESSOR - 400/50/3 SCHUTZVORRICHTUNG - 230/50/1 SCHUTZVORRICHTUNG - 230/60/1 KURBEL WANNENHEIZUN
2	CM 19621703	STARTING RELAY - 230/50/1 STARTING RELAY - 230/60/1	RELE' AVVIAMENTO - 230/50/1 RELE' AVVIAMENTO - 230/60/1	RELAIS - 230/50/1 RELAIS - 230/60/1	RELAIS - 230/50/1 RELAIS - 230/60/1
3	CM 19180600	STARTING CAPACITOR - 230/50/1 STARTING CAPACITOR - 230/60/1	CAPACITA' AVVIAMENTO - 230/50/1 CAPACITA' AVVIAMENTO - 230/60/1	CAPACITE DE DEMARRAGE - 230/50/1 CAPACITE DE DEMARRAGE - 230/60/1	STARTKONDENSATOR - 230/50/1 STARTKONDENSATOR - 230/60/1
4		RUNNING CAPACITOR - 230/50/1 RUNNING CAPACITOR - 230/60/1	CAPACITA' MARCIA - 230/50/1 CAPACITA' MARCIA - 230/60/1	CAPACITE PERMANENT - 230/50/1 CAPACITE PERMANENT - 230/60/1	BETRIEBSKONDENSATOR - 230/50/1 BETRIEBSKONDENSATOR - 230/60/1
5	CM 19863034	HOT GAS VALVE	VALVOLA GAS CALDO	VANNE GAZ CHAUD	HEISSGASVENTIL
6	CM 19177051	AIR COOLED CONDENSER	CONDENSATORE AD ARIA	CONDENSEUR A AIR	KONDENSATOR
7	CM 25168807	CONDENSER SHROUD	CONVOGLIATORE	CONVOYEUR	KONDENSATOR GEHÄUSE
8	CM 19300355	DRIER	FILTRO	DESHYDRATEUR	TROCKNER
9	CM 25474402	HI PRESSURE CONTROL	PRESSOSTATO SICUREZZA	PRESSOSTAT DE SECURITÉ	SICHERHEITPRESSOSTAT
10	CM 25725567	METAL BRACKET	SUPPORTO IN METALLO	SUPPORT METALLIQUE	METALTRÄGER
11	CM 81453986	THERM. EXP. VALVE	VALVOLA D'ESPANSIONE	DETENDEUR	EXPANSIONSVENTIL
12	CM 18562524	FAN MOTOR	MOTORE VENTILATORE	MOTEUR DU VENTILATEUR	LUFTERMOTOR
13	CM 18740032 CM 25726513	FAN BLADE FAN BRACKET	VENTOLA SUPPORTO MOTORE	HELICE SUPPORT MOTEUR	FLUEGEL LUFTER MOTOR TRAEGER
14	CM 25339009	CONDENSER FILTER	FILTRO CONDENSATORE	FILTRE CONDENSEUR	KONDENSATORFILTER

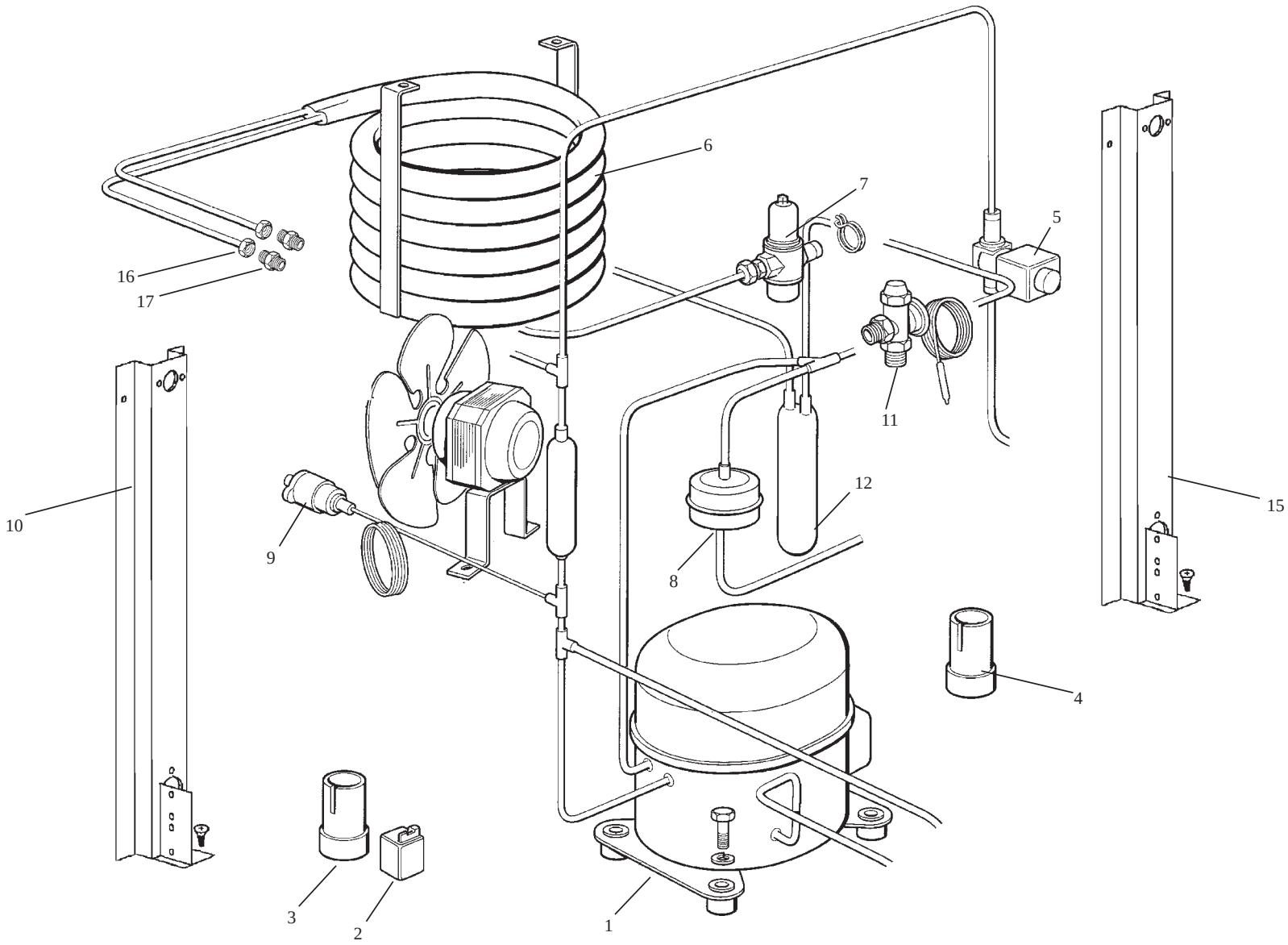
16
17
6
7
5
11
10
9
12
8
15
4
3
2
1

SV 385 - REFRIGERANT SYSTEM WATER COOLED - SISTEMA REFRIGERANTE RAFFR. AD ACQUA
CIRCUIT FRIGORIFIQUE REFROID. PAR EAU - WASSERGEKÜHLTE GEFRIERSYSTEM

ITEM NO POS NO REP. NO REF. NO	PART NO CODICE REFERENCE STUECK NR	DESCRIPTION	DESCRIZIONE	DESIGNATION	BESCHREIBUNG
1	CM 19165604 CM 33675118	COMPRESSOR - 400/50/3 PROTECTOR - 230/50/1 PROTECTOR - 230/60/1 CRANKCASE HEATER	COMPRESSORE - 400/50/3 PROTETTORE - 230/50/1 PROTETTORE - 230/60/1 RESISTENZA CARTER	COMPRESSEUR - 400/50/3 PROTECTEUR - 230/50/1 PROTECTEUR - 230/60/1 RECHAUFFEUR CARTER	KOMPRESSOR - 400/50/3 SCHUTZVORRICHTUNG - 230/50/1 SCHUTZVORRICHTUNG - 230/60/1 KURBEL WANNENHEIZUN
2	CM 19621703	STARTING RELAY - 230/50/1 STARTING RELAY - 230/60/1	RELE' AVVIAMENTO - 230/50/1 RELE AVVIAMENTO - 230/60/1	RELAIS - 230/50/1 RELAIS - 230/60/1	RELAIS - 230/50/1 RELAIS - 230/60/1
3	CM 19180600	STARTING CAPACITOR - 230/50/1 STARTING CAPACITOR - 230/60/1	CAPACITA' AVVIAMENTO - 230/50/1 CAPACITA' AVVIAMENTO - 230/60/1	CAPACITE DE DEMARRAGE - 230/50/1 CAPACITE DE DEMARRAGE - 230/60/1	STARTKONDENSATOR - 230/50/1 STARTKONDENSATOR - 230/60/1
4		RUNNING CAPACITOR - 230/50/1 RUNNING CAPACITOR - 230/60/1	CAPACITA' MARCIA - 230/50/1 CAPACITA' MARCIA - 230/60/1	CAPACITE PERMANENT - 230/50/1 CAPACITE PERMANENT - 230/60/1	BETRIEBSKONDENSATOR - 230/50/1 BETRIEBSKONDENSATOR - 230/60/1
5	CM 19863034	HOT GAS VALVE	VALVOLA GAS CALDO	VANNE GAZ CHAUD	HEISSGASVENTIL
6	CM 19177518	WATER COOLED CONDENSER	CONDENSATORE AD ACQUA	CONDENSEUR A EAU	KONDENSATOR
7	CM 19865611	WATER REGULATING VALVE	VALVOLA PRESSOSTATICA	VANNE PRESSOSTATIQUE	WASSERREGLER VENTIL
8	CM 19300355	DRIER	FILTRO	DESHYDRATEUR	TROCKNER
9	CM 25474402	HI PRESSURE CONTROL	PRESSOSTATO SICUREZZA	PRESSOSTAT DE SECURITÉ	SICHERHEITPRESSOSTAT
10	CM 25725567	METAL BRACKET LT	SUPPORTO IN METALLO SX	SUPPORT METALLIQUE GAUCHE	METALTRÄGER LINKE
11	CM 81453986	THERM. EXP. VALVE	VALVOLA D'ESPANSIONE	DETENDEUR	EXPANSIONSVENTIL
12	CM 81453816	ACCUMULATOR ASSY	ASS. ACCUMULATORE	ENS. ACCUMULATEUR	SAMMLER
15	CM 25725569	METAL BRACKET RT	SUPPORTO IN METALLO DX	SUPPORT METALLIQUE DROITE	METALTRÄGER RECHTE
16	CM 25631047	FITTING	RACCORDO	RACCORDE	WASSERBEFESTIGUNG
17	CM 25631045	FITTING	RACCORDO	RACCORDE	WASSERBEFESTIGUNG

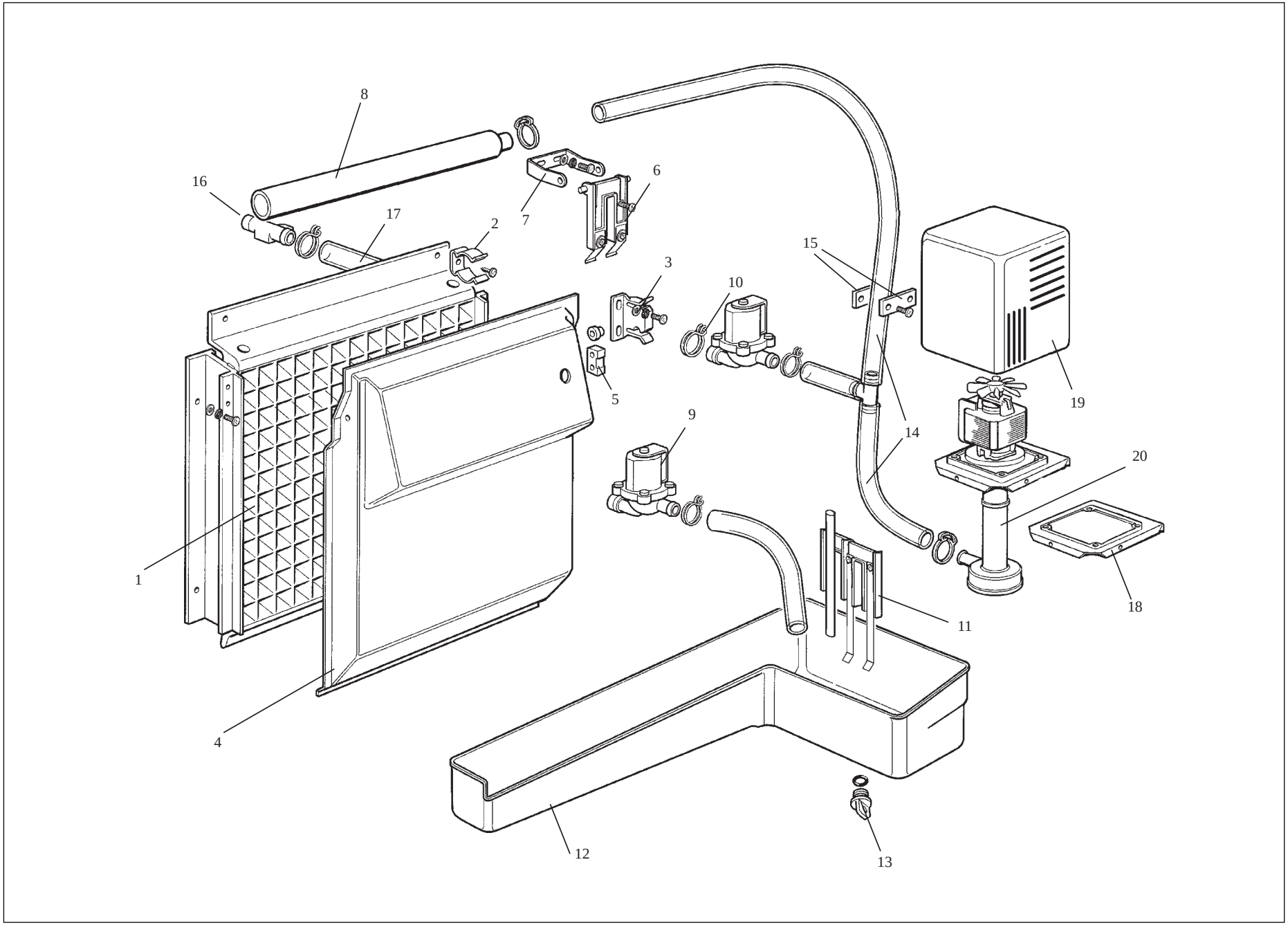
8
16
17
2
7
6
3
10
15
5
9
14
20
19
1
4
18
11
12
13

SV 385 - ICE MAKING SYSTEM - GRUPPO EVAPORATORE - GROUP EVAPORATEUR - VERDAMPFER

ITEM NO POS NO REP. NO REF. NO	PART NO CODICE REFERENCE STUECK NR	DESCRIPTION	DESCRIZIONE	DESIGNATION	BESCHREIBUNG
1	CM 81453966 CM 81453967	EVAPORATOR ASSY EVAPORATOR ASSY - HALF DICE	ASS. EVAPORATORE ASS. EVAPORATORE - MEZZO CUBETTO	ENS. EVAPORATEUR ENS. EVAPORATEUR - DEMI GLAÇON	VERDAMPFEREINHEIT VERDAMPFEREINHEIT - MINI WÜRFEL
2	CM 25474608	METAL CLIP	MOLLETTA IN METALLO	SUPPORT	UNKLAMMERN
3	CM 25726473	BRACKET, DEFLECTOR COVER	SUPPORTO COPERCHIO DEFLETTORE	SUPPORT COUVERCLE/DEFLECTEUR	LENKWAND KLAMMERN
4	CM 81453970	DEFLECTOR COVER	COPERCHIO DEFLETTORE	COUVERCLE/DEFLECTEUR	LENKWAND
5	CM 19355007	MAGNET	MAGNETE	MAGNETO	MAGNET
6	CM 81453434	ICE THICKNESS SENSOR	SENSORE SPESSORE GHIACCIO	SONDE EPAISSEUR GLAÇONS	EISGROSSENßFÜHLER
7	CM 25725450	BRACKET, ICE THICKNESS SENSOR	SUPPORTO SENSORE GHIACCIO	SUPPORTO DISPOSITIF CAPTEUR	EISMEßFÜHLER KLAMMERN
8	CM 81463575	TUBE, WATER DISTRIBUTOR	TUBO DI DISTRIBUZIONE	POMPE DE DISTRIBUTION EAU	WASSERSPRUEHEINHEIT
9	650105 54	WATER INLET VALVE	VALVOLA INGR. ACQUA	V. EN. ARRIVÉE EAU	WASSEREINLAUFVENTIL
10	CM 19865525	VALVE, WATER DRAIN	VALVOLA DI SCARICO	VANNE DE VIDANGE EAU	WASSERABFLUSSVENTIL
11	CM 81453796	WATER LEVEL SENSOR	SONDA LIVELLO ACQUA	SONDE NIVEAU EAU	WASSERNIVEAU FÜHLER
12	CM 25820125	WATER SUMP	VASCHETTA ACQUA	RESERVOIR D'EAU	WASSERBECKEN
13	CM 25730503 CM 41020448	DRAIN PLUG O RING	TAPPO SCARICO GUARNIZIONE OR	BOUCHON DE VIDANGE JOINT TORIQUE	VERSCHLUßSCRAUBE O RING
14	CM 81453962	TUBE, WATER	TUBO	TUYAU	ROHR
15	CM 81453015	WATER FLOW ADJUSTER ASSY	ASS. REGOLATORE PORTATA	ENS. REGLEUR DE DEBIT EAU	WASSERFLUSS REGLER
16	CM 25690807	DRAIN FITTING, WATER	RACCORDO SCARICO	RACCORD EVACUATION EAU	WASSERABFLUSS STÜCK
17	CM 25791643	TUBE	TUBO	TUYAU	SCHLAUCH
18	CM 25725531	BRACKET, PUMP	SUPPORTO POMPA	SUPPORT POMPE	PUMPENTRAEGER
19	CM 81453627	WATER PUMP COVER	COPERCHIO POMPA	COUVERCLE POMPE	PUMPE ABDECKUNG
20	620433 00 620433 01	WATER PUMP - 230/50/1 WATER PUMP - 230/60/1	POMPA - 230/50/1 POMPA - 230/60/1	POMPE A EAU - 230/50/1 POMPE A EAU - 230/60/1	WASSERPUMPE - 230/50/1 WASSERPUMPE - 230/60/1

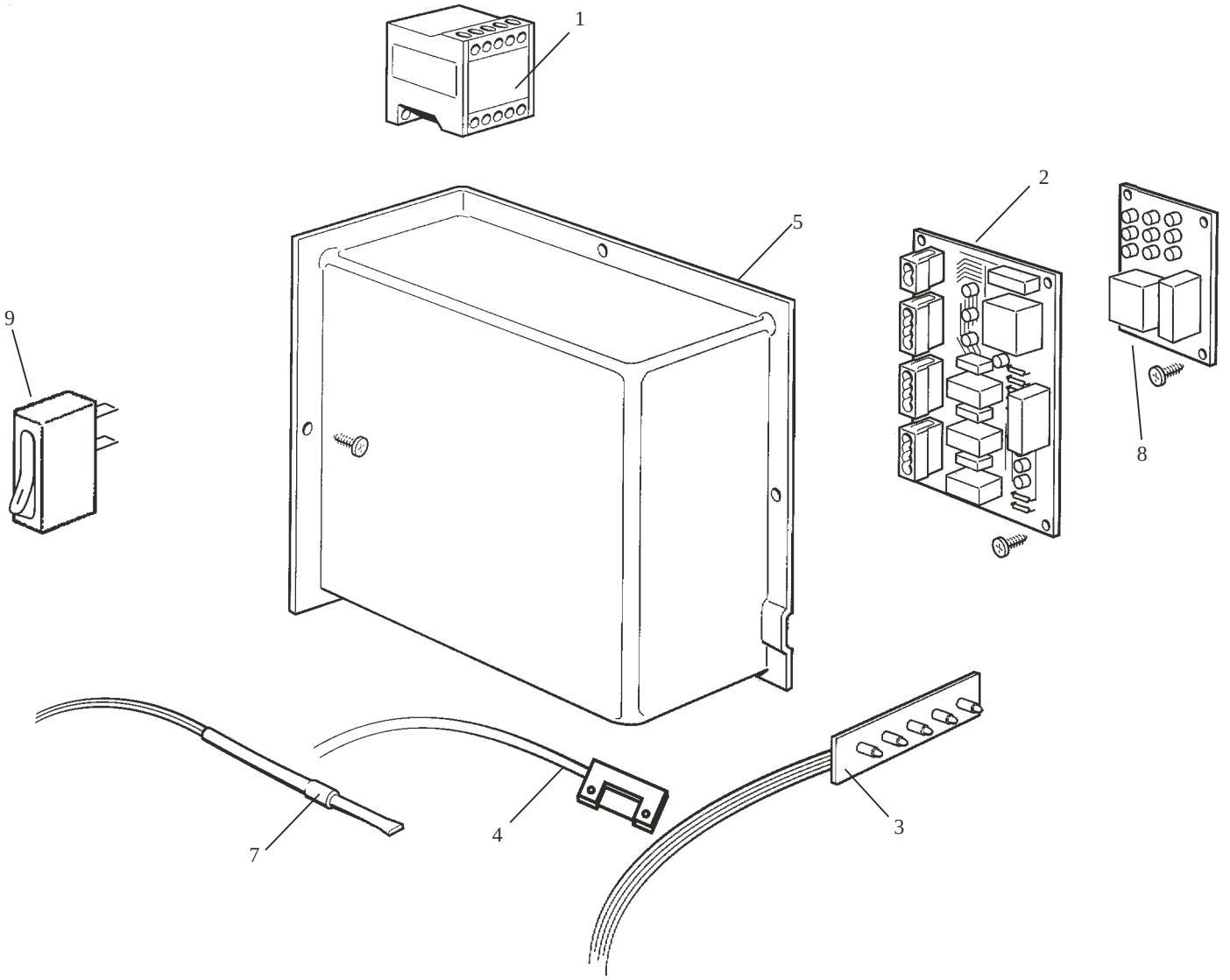
1
2
5
9
8
7
4
3

SV 385 - P.C. BOARD AND SENSOR ASSY - SCHEDA ELETTRONICA E SENSORI
ENS. CARTE ELECTRINIQUE ET DETECTEURS - ELEKTRONISCHE KARTE UND TEMPERATURFUEHLERENHEIT

ITEM NO POS NO REP. NO REF. NO	PART NO CODICE REFERENCE STUECK NR	DESCRIPTION	DESCRIZIONE	DESIGNATION	BESCHREIBUNG
1	CM 33730712	CONTACTOR	TELERUTTORE	CONTACTEUR	SCHALTSCHÜTZ
2	CM 33580150	P.C. BOARD	SCHEDA ELETTRONICA	CARTE ELECTRONIQUE	STEUERKARTE
3	CM 33580151	MONITORING LED ASSY	PANNELLO DI CONTROLLO	ENS. LED DE SIGNALISATION	SIGNAL LED EINHEIT
4	CM 33210018	MAGNETIC SENSOR	SENSORE MAGNETICO	SONDE MAGNETIQUE	MAGNETISCHES FÜHLER
5	CM 25161143	CONTROL BOX COVER	COPERCHIO	COUVERCLE	ANSCHLUSSKASTEN GEHAUSE
7	CM 33580101	CONDENSER SENSOR	SENSORE CONDENSATORE	SONDE CONDENSEUR	KONDENSER FÜHLER
8	CM 33580173	START DELAYED ELECTRONIC CARD	SCHEDA RITARDO AVVIAMENTO	CARTE RETARD	BETRIEB-VERSPÄTUNGSPLATINE
9	CM 33400046	PUSH BOTTON	PULSANTE	BOUTON POUSSOIR	KNOPF

SIMAG
ICE MACHINES

www.simag.it

SIMAG
via Risorgimento, 4
20017 Mazzo di Rho (MI) - Italy
Tel. +39 02 93900215 (Commerciale - Sales Dept.)
Tel. +39 02 93960357 (Assistenza - Service Dept.)
Fax +39 02 93900226 (Commerciale - Sales Dept.)
Fax +39 02 93960366 (Assistenza - Service Dept.)
e-mail: sales@simag.it
e-mail: service@simag.it

Singapore Office
SIMAG FAR EAST
627A Aljunied Road
04-04 Biztech Centre
Singapore 389842
Tel. ++65 6738 5393
Fax ++65 6738 1959
e-mail: scotsice@singnet.com.sg

Certified ISO 9001
TOTAL QUALITY