Mod./Type: **_70/... PCG - CFG - CFGE - CFGG - TP...G EXTREME**
_90/... PCG - CFG - CFGE - CFGG - TP...G EXTREME

cod./num. 2531582.00

data/date: 15/04/2014

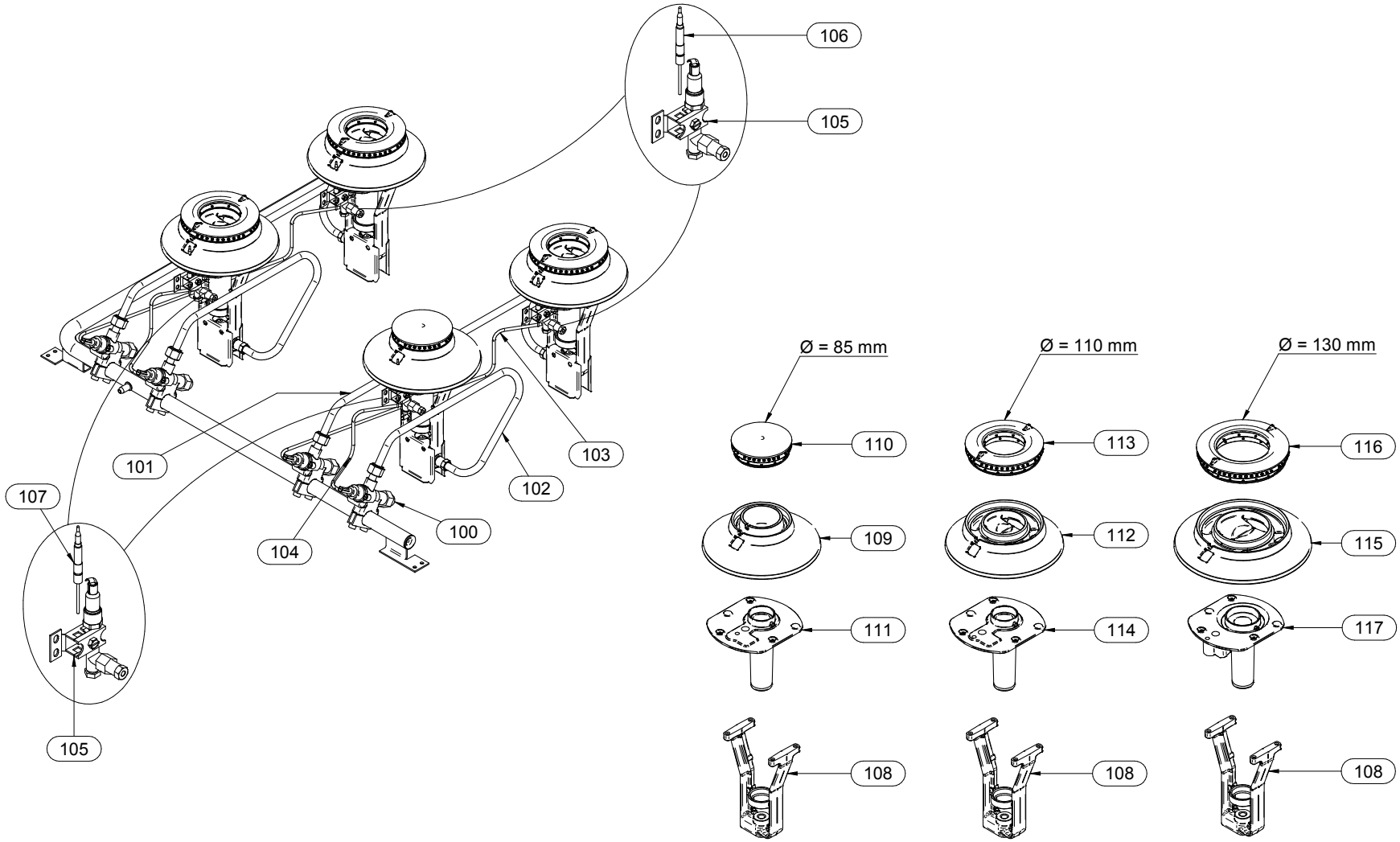

Mod./Type:	_70/80 TPG... - _70/... TP...G... - _90/... TP...G... EXTREME	cod./num.	2531657.00
		data/date:	20/05/2014

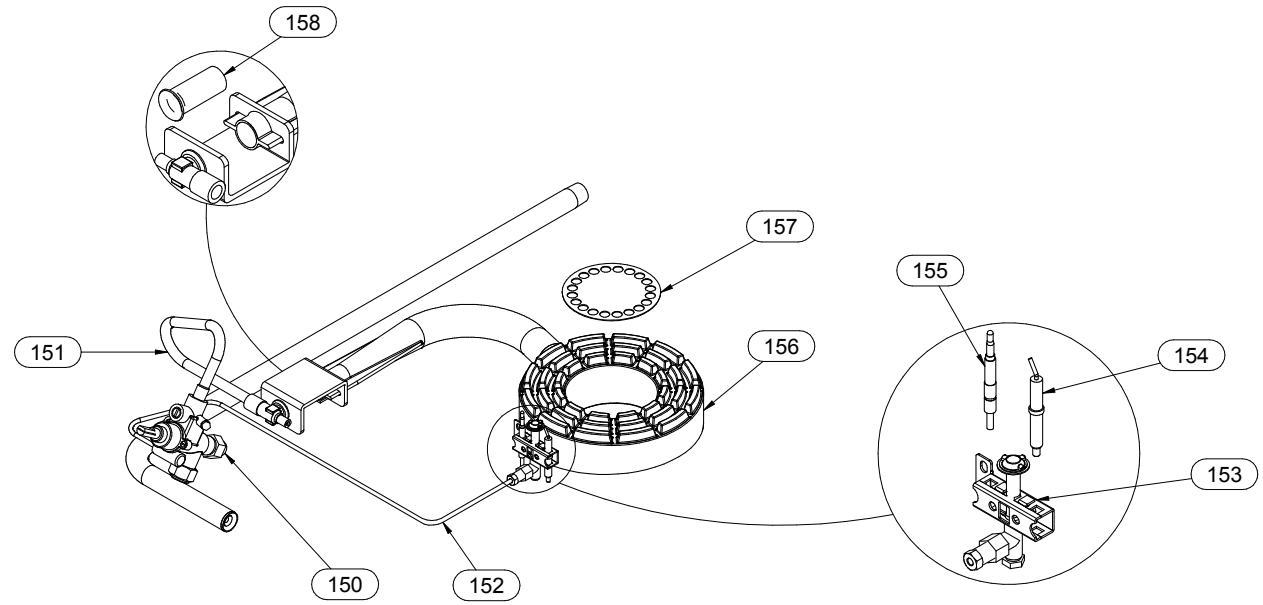

Mod./Type: **_70/... TPFG**
EXTREME

cod./num. 2531671.00
data/date: 14/06/2014

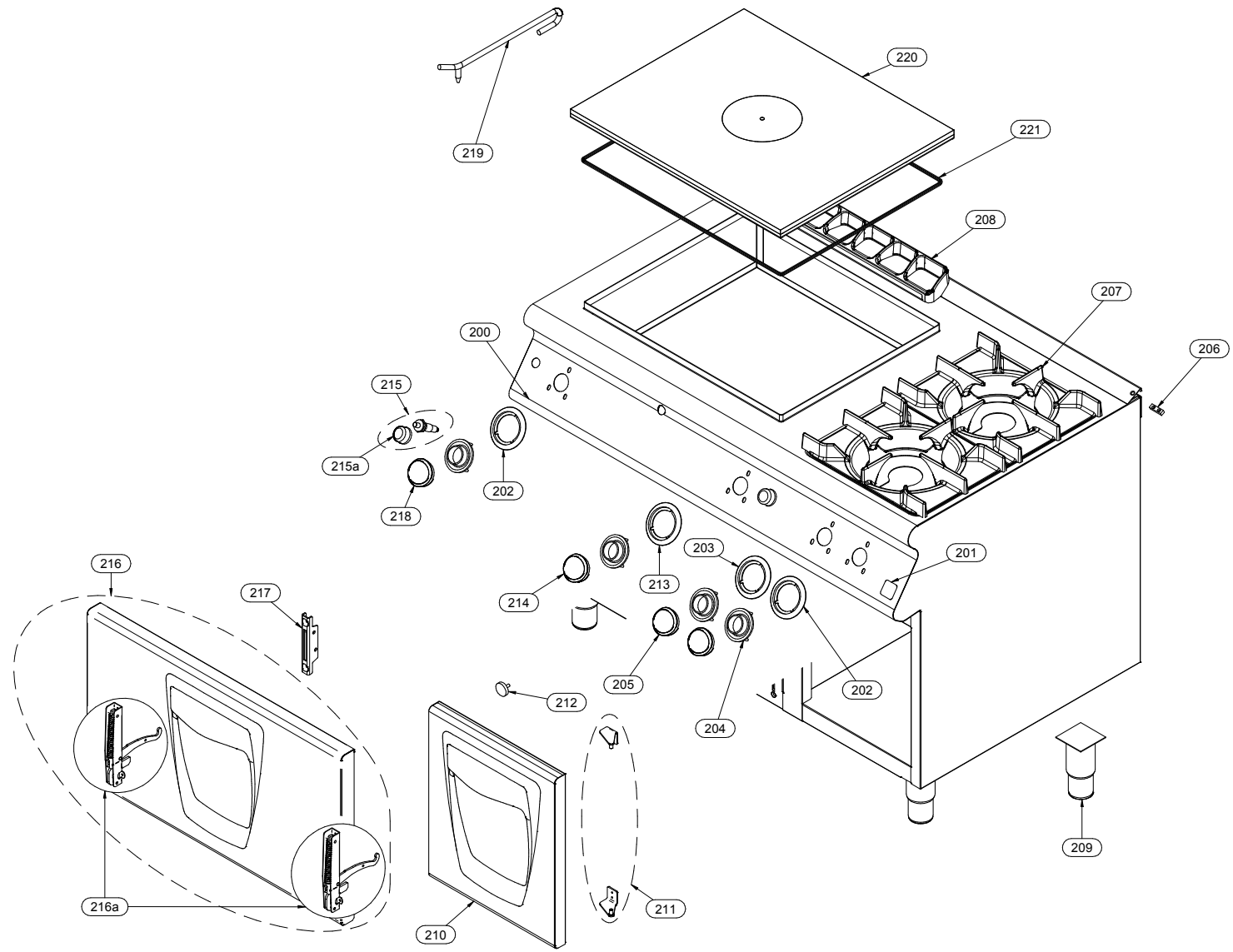

Mod.:	_70/... PCG - CFG - CFGG - CFGE - TP...G _90/... PCG - CFG - CFGG - CFGE - TP...G EXTREME			cod. / num. 2531583.00 data / date 15/04/2014 rif. / ref. 2531582.00		_70/40 PCG...	_70/80 PCG... - ...CFG...	_70/120 PCG... - ...CFG...	_90/40 PCG...	_90/80 PCG... - ...CFG...	_90/120 PCG... - ...CFG...	_90/160 PCG... - ...CFG...	_70/80 TPPCG... - ...TPPFG	_70/120 TPPCG2... - ...TPPCFG2	_90/80 TPPCG... - ...TPPFG	_90/120 TPPCG2... - ...TPPCFG2	NOTE
POS.	DESCRIZIONE	DESCRIPTION	DENOMINATION	BENENNUNG	COD.	Q. ty											
100	RUBINETTO GAS	GAS TAP	ROBINET GAZ	GASHAHN	671.088.00	2	4	6	2	4	6	8	2	4	2	4	
101	TUBO GAS	GAS PIPE	TUBE GAZ	GASROHR	256.219.00	1	2	3					1	2			
					256.250.00				1	2	3	4			1	2	
102	TUBO GAS	GAS PIPE	TUBE GAZ	GASROHR	256.220.00	1	2	3					1	2			
					256.251.00				1	2	3	4			1	2	
103	TUBO GAS	GAS PIPE	TUBE GAZ	GASROHR	256.221.00	1	2	3					1	2			
					256.252.00				1	2	3	4			1	2	
104	TUBO GAS	GAS PIPE	TUBE GAZ	GASROHR	256.222.00	1	2	3					1	2			
					256.253.00				1	2	3	4			1	2	
105	GRUPPO PILOTA	PILOT GROUP	GROUPE VEILLEUSE	ZÜNDBRENNER GRUPPE	972.021.00	2	4	6	2	4	6	8	2	4	2	4	
106	TERMOCOPPIA POSTERIORE	REAR THERMOCOUPLE	THERMOCOUPLE POSTERIEURE	HINTERES THERMOELEMENT	672.099.00	1	2	3	1	2	3	4	1	2	1	2	
107	TERMOCOPPIA ANTERIORE	FRONT THERMOCOUPLE	THERMOCOUPLE ANTERIEURE	VORDERES THERMOELEMENT	672.025.00	1	2	3	1	2	3	4	1	2	1	2	
108	PORTAUGELLO	NOZZLE HOLDER	PORTE-INJECTEUR	SPRITZDÜSE-TRÄGER	982.020.00	2	4	6	2	4	6	8	2	4	2	4	
109	BRUCIATORE 3,5kW	BURNER 3,5kW	BRULEUR 3,5kW	BRENNER 3,5kW	972.018.00	1	1	1	-	-	-	-	-	1	-	-	
110	SPARTIFIAMMA	FLAMESPREADER	CHAPEAU BRULEUR	FLAMMENTEILER	972.022.00	1	1	1	-	-	-	-	-	1	-	-	
111	SUPPORTO BRUCIATORE	SUPPORT FOR BURNER	SUPPORT BRÛLEUR	TRÄGER FÜR BRENNER	982.017.00	1	1	1	-	-	-	-	-	1	-	-	
112	BRUCIATORE 6kW	BURNER 6kW	BRULEUR 6kW	BRENNER 6kW	972.019.00	1	3	5	1	1	2	2	2	3	1	1	
113	SPARTIFIAMMA	FLAMESPREADER	CHAPEAU BRULEUR	FLAMMENTEILER	972.023.00	1	3	5	1	1	2	2	2	3	1	1	
114	SUPPORTO BRUCIATORE	SUPPORT FOR BURNER	SUPPORT BRÛLEUR	TRÄGER FÜR BRENNER	982.018.00	1	3	5	1	1	2	2	2	3	1	1	
115	BRUCIATORE 10kW	BURNER 10kW	BRULEUR 10kW	BRENNER 10kW	972.020.00	-	-	-	1	3	4	6	-	-	1	3	
116	SPARTIFIAMMA	FLAMESPREADER	CHAPEAU BRULEUR	FLAMMENTEILER	972.024.00	-	-	-	1	3	4	6	-	-	1	3	
117	SUPPORTO BRUCIATORE	SUPPORT FOR BURNER	SUPPORT BRÛLEUR	TRÄGER FÜR BRENNER	982.011.00	-	-	-	1	3	4	6	-	-	1	3	
118																	
119																	
120																	
121																	
122																	
123																	
124																	
125																	
126																	
127																	
128																	
129																	
130																	
131																	
132																	
133																	
134																	
135																	
136																	
137																	
138																	
139																	
140																	

Mod.:	_70/… TP...G... - _90/... TP...G… EXTREME			cod. / num. 2531658.00 data / date 12/06/2014 rif. / ref. 2531657.00		_70/80 TPG... - TP...G...	_70/120 TP...G...	_90/80 TPG... - TP...G...	_90/120 TP...G...	NOTE
POS.	DESCRIZIONE	DESCRIPTION	DENOMINATION	BENENNUNG	COD.	Q.ty				
150	RUBINETTO GAS	GAS TAP	ROBINET GAZ	GASHAHN	671.031.00	1	1	1	1	
151	TUBO GAS	GAS PIPE	TUYAU DE GAZ	GASLEITUNG	256.230.00	1	1			
					256.278.00			1	1	
152	TUBO GAS	GAS PIPE	TUYAU DE GAZ	GASLEITUNG	256.231.00	1	1			
					256.279.00			1	1	
153	GRUPPO PILOTA	PILOT GROUP	GROUPE VEILLEUSE	ZÜNDBRENNER GRUPPE	672.057.00	1	1	1	1	
154	CANDELA ACCENSIONE	IGNITION ELECTRODE	BOUGIE D'ALLUMAGE	KERZE SCHNELLBRENNER	672.060.00	1	1	1	1	
155	TERMOCOPPIA	THERMOCOUPLE	THERMOCOUPLE	THERMOELEMENT	672.025.00	1	1	1	1	
156	BRUCIATORE	BURNER	BRULEUR	BRENNER	672.056.00	1	1	1	1	
157	AERATORE	AERATOR	AÉRATEUR	LÜFTER	923.271.00	1	1	1	1	
158	BOCCOLA REGOLAZIONE ARIA	AIR REGULATION BUSHING	BAGUE DE RÉGULATION AIR	LUFTREGLERBÜCHSE	672.061.00	1	1	1	1	
159										
160										
161										
162										
163										
164										
165										
166										
167										
168										
169										
170										
171										
172										
173										
174										
175										
176										
177										
178										
179										
180										
181										
182										
183										

Mod.:	_70/... TPFG EXTREME			cod. / num. 2531672.00 data / date 06/06/2014 rif. / ref. 2531671.00		EM70/80 TPFG	EM70/120 TPFG	NOTE	
POS.	DESCRIZIONE	DESCRIPTION	DENOMINATION	BENENNUNG	COD.	Q. ty			
200	CRUSCOTTO	CONTROL PANEL	BANDEAU	BEDIENBLENDE	6111291.00	1			
					9111370.00		1		
201	MARCHIO	BRAND NAME	MARQUE	MARKENZEICHEN	982.021.00	1	1	**FROM: 15.12.2011**	**TO: 31.01.2014**
					982.023.00	1	1	**FROM: 01.02.2014**	**TO:...**
202	SERIGRAFIA	SCREEN PRINT	SÉRIGRAPHIE	SIEBDRUCK	910.163.00	1	2		
203	SERIGRAFIA	SCREEN PRINT	SÉRIGRAPHIE	SIEBDRUCK	910.164.00	-	1		
204	LABIRINTO	LABYRINTH	LABYRINTHE	LABYRINTH	256.235.00	2	4		
205	MANOPOLA	KNOB	BOUTON	DREHKNOPF	256.217.00	-	2		
206	PIASTRINA GIUNZIONE	FIXING PLATE	PLAQUETTE FIXAGE	BEFESTIGUNGSPLATTE	941.130.00	1	1		
207	GRIGLIA	GRID	GRILLE	ROST	681.059.00	-	2		
208	GRIGLIA CAMINO	FLUE GRIDDLE	GRILLE POUR CHEMINÉE	KAMINROST	982.013.00	1	1		
209	PIEDINO	FOOT	PIED	STELLFUSS	912.090.00	4	4	**FROM: 15.12.2011**	**TO: 17.05.2013**
					912.090.14	4	4	**FROM: 18.05.2013**	**TO:...**
210	PORTA	DOOR	PORTE	TÜR	256.215.00	-	1		
211	COPPIA CERNIERE	GASKETS PAIR	COUPLE CHARNIÈRES	SCHARNIERPAAR	256.216.00	-	1		
212	MAGNETE	MAGNET	MAGNÉTO	MAGNET	684.007.00	-	1	**FROM: 15.12.2011**	**TO: 01.01.2014**
					984.006.00	-	1	**FROM: 02.01.2014**	**TO:...**
213	SERIGRAFIA	SCREEN PRINT	SÉRIGRAPHIE	SIEBDRUCK	910.228.00	1	1		
214	MANOPOLA FORNO	OVEN KNOB	BOUTON DU FOUR	OFENKNOPF	256.243.00	1	1		
215	ACCENDITORE PIEZO	PIEZO LIGHTER	ALLUMEUR PIEZO	PIEZOZÜNDER	912.091.00	2	2		
215a	CAPPUCCIO	CAP	CAPUCHON	KAPPE	951.047.00	2	2		
216	PORTA	DOOR	PORTE	TÜR	256.248.00	1	1		
216a	CERNIERA	JOINT	CHARNIERE	SCHARNIER	684.030.00	2	2		
217	PORTARULLINO	ROLL HOLDER	PORTE-AIGUILLE DE ROULEMENT	ROLLE-TRÄGER	684.011.00	2	2		
218	MANOPOLA	KNOB	BOUTON	DREHKNOPF	256.229.00	1	1		
219	GANCIO	HOOK	CROC	HAKEN	683.028.00	1	1		
220	PIASTRA	SOLID TOP	PLAQUE COUP DE FEU	KOCHFELD	681.012.00	1	1		
221	GUARNIZIONE	WASHER	GUARNITURE	DICHTUNGSRING	953.004.00	2,2	2,2	U. M. metri	U. M. meters
222									
223									
224									
225									
226									
227									
228									