DESPIECE TECNICO

Lavadoras
Lava-linge
Washing machines
Waschmaschine
Lavatrici
Máquinas de lavar roupa

Modelos:

LN-10 / LN-11
LN-13
LN-18
LN-25
LN-35

Abril 2014 April

FAGOR

FAGOR INDUSTRIAL

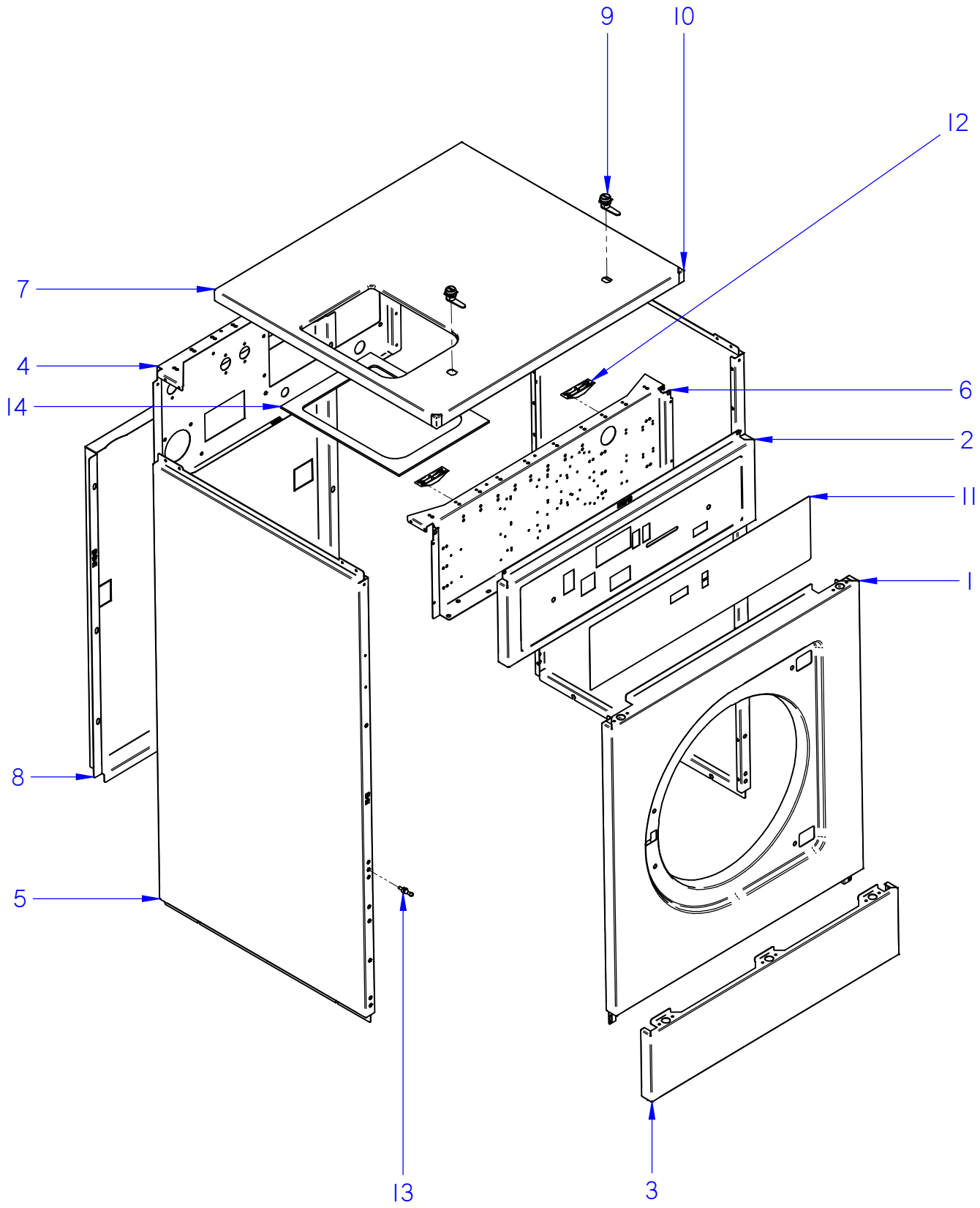

ITEM MARCADO EN COLOR = REPUESTO RECOMENDADO
COLOURED ITEM = RECOMMENDED SPARE PART

Nº plano / Drawing Nr	Firma	Fecha / Date	Denominación / Denomination: MUEBLE - CABINET	Lamina / Sheet	
C-3236	Iban R.	2014-03	LAVADORAS LN	1	Fagor Industrial S.Coop. FAGOR Oñate

MOD.	LAVADORAS / WASHING MACHINES	ZONA / ZONE	MUBLE / CABINET	PLANO DIAGRAM	C-3236

ITEM	CODIGO REFERENCE	DENOMINACION	DENOMINATION	LN-10 / LN-11	LN-13	LN-18	LN-25	LN-35				ELIMINADO ELIMINATED	INTRODUCID. INTRODUCED	NOTAS
1	12111766	PANEL FRONTAL LN-10-13	FRONT PANEL	1	1									
1	12111768	PANEL FRONTAL LN-18	FRONT PANEL			1								
1	12111770	PANEL FRONTAL LN-25	FRONT PANEL				1							
1	12111772	PANEL FRONTAL LN-35	FRONT PANEL					1						
2	12046894	PORTAMANDOS LN-13	CONTROL PANEL LN-13	1	1									M MODELS
2	12092667	PORTAMANDOS LN-10-13 MA	CONTROL PANEL LN-10-13 MA	1	1									MA MODELS
2	12001142	PORTAMAN. LA-13/LR-18 M	CTRL. PANEL LA-13/LR-18 M			1								M MODELS
2	12001143	PORTAMAN. LA-13/LR-18 MA	CTRL. PANEL LA-13/LR-18 MA			1								MA MODELS
2	12001130	PORTAMAN. LA-18/LR-25 M	CTRL. PANEL LA-18/LR-25 M				1							M MODELS
2	12001131	PORTAMAN. LA-18/LR-25 MA	CTRL. PANEL LA-18/LR-25 MA				1							MA MODELS
2	12001114	PORTAMANDOS 25 M	CTRL. PANEL 25 M					1						M MODELS
2	12001115	PORTAMANDOS 25 MA	CTRL. PANEL 25 MA					1						MA MODELS
3	12111767	ZOCALO LN-10-13	SKIRTING LN-10-13	1	1									
3	12111769	ZOCALO PRIMER 13	SKIRTING PRIMER 13			1								
3	12111771	ZOCALO LN-25	SKIRTING LN-25				1							
3	12111773	ZOCALO LN-35	SKIRTING LN-35					1						
4	12046939	SOPORTE ELECTROVALV. LN-13	SOLENOID VALVE SUPPORT	1	1									
4	12001339	SOPORTE ELECTROVALVULS 13	SOLENOID VALVE SUPPORT			1								
4	12091565	SOPORTE ELECTROV. LN-25	SOLENOID VALVE SUP. LN-25				1							
4	12001288	SOPORTE ELECTROV. 25	SOLENOID VALVE SUP. 25					1						
5	12110865	PANEL LATERAL LN-10	SIDE PANEL LN-10	2										
5	12110867	PANEL LATERAL 10 V3	SIDE PANEL 10 V3		2									
5	12110869	PANEL LATERAL 13 V3	SIDE PANEL 13 V3			2								
5	12110872	PANEL LATERAL LR-18	SIDE PANEL LR-18				2							
5	12110874	PANEL LATERAL LR-25	SIDE PANEL LR-25					2						
6	12046895	CONTRAPORTAMANDOS LN-13	COUNTERCONTROL HOLDER	1	1									M MODELS
6	12092218	CONTRAPORTAMANDOS 10, 13 MA	COUNTERCONTROL HOLDER	1	1									MA MODELS
6	12001425	CONTRAPORTAMANDOS 13 M/MP	COUNTERCONTROL HOLDER			1								M MODELS
6	12001424	CONTRAPORTAMANDOS 13 MA	COUNTERCONTROL HOLDER			1								MA MODELS
6	12001385	CONTRAPORTAMANDOS 18 M/MP	COUNTERCONTROL HOLDER				1							M MODELS
6	12001386	CONTRAPORTAMANDOS 18 MA	COUNTERCONTROL HOLDER				1							MA MODELS

MOD.	LAVADORAS / WASHING MACHINES	ZONA / ZONE	MUBLE / CABINET	PLANO DIAGRAM	C-3236

ITEM	CODIGO REFERENCE	DENOMINACION	DENOMINATION	LN-10 / LN-11	LN-13	LN-18	LN-25	LN-35				ELIMINADO ELIMINATED	INTRODUCID. INTRODUCED	NOTAS
6	12001362	CONTRAPORTAMANDOS 35 M/MP	COUNTERCONTROL HOLDER					1						M MODELS
6	12001363	CONTRAPORTAMANDOS 35 MA	COUNTERCONTROL HOLDER					1						MA MODELS
7	12110882	ENCIMERA PESTAÑA LN-10	WORKTOP LN 10	1										
7	12110883	ENCIMERA PESTAÑA LN-13	WORKTOP LN 13		1									
7	12110884	ENCIMERA PESTAÑA LN-18	WORKTOP LN 18			1								
7	12110885	ENCIMERA LN-25	WORKTOP LN 25				1							
7	12110886	ENCIMERA LN-35	WORKTOP LN 35					1						
8	12046941	PANEL POSTERIOR LN-10-13	REAR PANEL LN-10-13	1	1									
8	12041205	PANEL POSTERIOR LN-18	REAR PANEL LN-18			1								
8	12092609	PANEL POSTERIOR LN-25	REAR PANEL LN-25				1							
8	12046869	PANEL POSTERIOR LN-35	REAR PANEL LN-35					1						
9	12024998	CERRADURA 0185	LOCK 0185	2	2	2	2	2						M MODELS
9	12009745	CERRADURA CON LLAVE	LOCK WITH KEY	2	2	2	2	2						MA MODELS
10	12039188	CANTONERA R1	R1 CORNER	2	2	2	2	2						
11	12007722	ADHESIVO 2010 FAGOR M	ADHESIVE 2010 FAGOR M	1	1	1	1	1						M MODELS
11	12007719	ADHESIVO 2010 FAGOR MA	ADHESIVE 2010 FAGOR MA	1	1	1	1	1						MA MODELS
11	12007741	ADHESIVO CP FAGOR	PC ADHESIVE FAGOR	1	1	1	1	1						MA MODELS
12	12009676	RAMPA CIERRE ENCIMERA	WORKTOP LOCK RAMP	2	2	2	2	2						
13	12008693	PITON CIERRE	BOLT CLOSURE	10	10	10	10	10						
14	12009796	APOYO CUBETA DE DETERGENTES	DETERGENT TRAY SUPPORT	1	1	1	1	1						

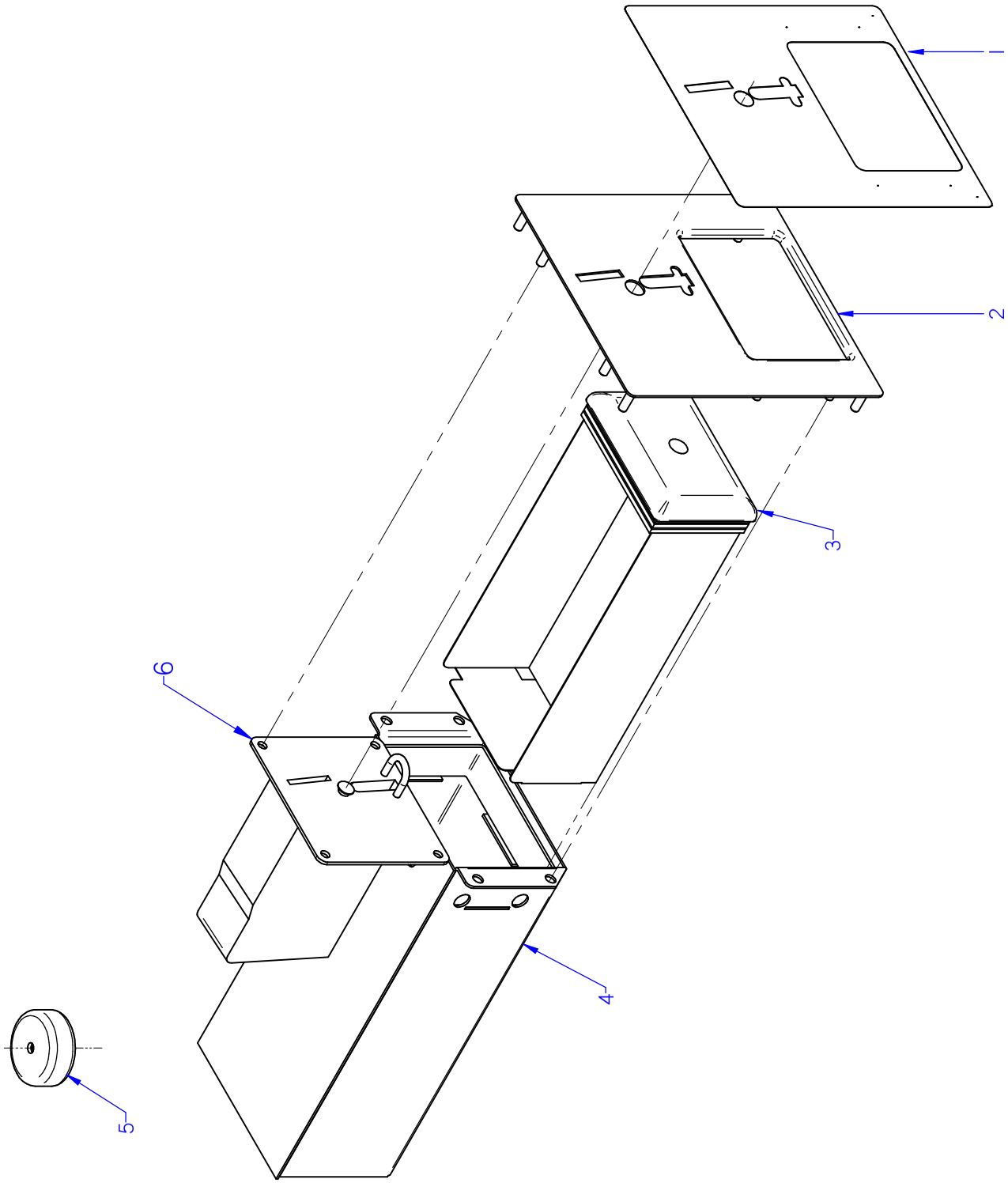

ITEM MARCADO EN COLOR = REPUESTO RECOMENDADO
COLOURED ITEM = RECOMMENDED SPARE PART

Nº plano / Drawing Nr.	Firma	Fecha / Date	Denominación / Denomination: KIT MONEDERO - COIN SLOT KIT	Lamina / Sheet	
C-3243	Iban R.	2014-03	LAVADORAS	2	Fagor Industrial S.Coop. FAGOR Oñate

MOD.	LAVADORAS / WASHING MACHINES	ZONA / ZONE	KIT MONEDERO / COIN SLOT KIT	PLANO DIAGRAM	C-3243

ITEM	CODIGO REFERENCE	DENOMINACION	DENOMINATION	LN-10 / 11 MA	LN-13 MA	LN-18 MA	LN-25 MA	LN-35 MA				ELIMINADO ELIMINATED	INTRODUCID. INTRODUCED	NOTAS
1	12007739	ADHESIVO MONEDERO FAGOR	COIN SLOT ADHESIVE FAGOR	1	1	1	1	1						
2	12003367	CHAPA MONEDERO COMPL.	COIN SLOT PLATE COMPL.	1	1	1	1	1						
S/Nº	12095202	TAPA MONEDERO COMPLETA FABF	COIN SLOT PLATE TOP COMPL.	1	1	1	1	1						
3	12023400	CAJON MONEDAS	COIN DRAWER	1	1	1	1	1						
4	12096670	PORTA CAJA MONEDAS COMPL.	COIN BOX HOLDER COMPL.	1	1	1	1	1						
5	12009621	TRANSFORMADOR MONEDERO	COIN SLOT TRANSFORMER	1	1	1	1	1						
6	12023342	MONEDERO WH (EUR-GBP)	COIN SLOT WH (EUR-GBP)	1	1	1	1	1						
6	12044494	MONEDERO WH (ARS-CLP-BRL)	COIN SLOT WH (ARS-CLP-BRL)	1	1	1	1	1						
6	12044490	MONEDERO WH (AUD-NZD-JPY)	COIN SLOT WH (AUD-NZD-JPY)	1	1	1	1	1						
6	12044488	MONEDERO WH (CNY-TWD-HKD)	COIN SLOT WH (CNY-TWD-HKD)	1	1	1	1	1						
6	12044496	MONEDERO WH (MAD-DZD-TND)	COIN SLOT WH (MAD-DZD-TND)	1	1	1	1	1						
6	12044489	MONEDERO WH (MYR-SGD-IDR)	COIN SLOT WH (MYR-SGD-IDR)	1	1	1	1	1						
6	12044492	MONEDERO WH (RUB-ROB-CZK)	COIN SLOT WH (RUB-ROB-CZK)	1	1	1	1	1						
6	12044491	MONEDERO WH (TRY-PLN)	COIN SLOT WH (TRY-PLN)	1	1	1	1	1						
6	12044487	MONEDERO WH (USD-MXN-CAD)	COIN SLOT WH (USD-MXN-CAD)	1	1	1	1	1						
6	12044493	MONEDERO WH (VEF-PEN-COP)	COIN SLOT WH (VEF-PEN-COP)	1	1	1	1	1						
	19012640	FAGOR KIT MONEDERO EUR-GBP	FAGOR KIT COIN 2013 EUR-GBP											
	19012641	FAGOR KIT MONEDE. ARS-CLP-BRL	FAGOR KIT COIN 2013 ARS-CLP-BRL											
	19012642	FAGOR KIT MONEDE. AUD-NZD-JPY	FAGOR KIT COIN 2013 AUD-NZD-JPY											
	19012643	FAGOR KIT MONED. CNY-TWD-HKD	FAG. KIT COIN 2013 CNY-TWD-HKD											
	19012644	FAGOR KIT MONED. MAD-DZD-TND	FAGOR KIT COIN 2013 MAD-DZD-TN											
	19012645	FAGOR KIT MONED. MYR-SGD-IDR	FAGOR KIT COIN 2013 MYR-SGD-IDF											
	19012646	FAGOR KIT MONED. RUB-ROB-CZK	FAGOR KIT COIN 2013 RUB-ROB-CZ											
	19012647	FAGOR KIT MONEDERO TRY-PLN	FAGOR KIT COIN 2013 TRY-PLN											
	19012648	FAGOR KIT MONED. USD-MXN-CAD	FAGOR KIT COIN 2013 USD-MXN-CA											
	19012649	FAGOR KIT MONED. VEF-PEN-COP	FAG. KIT COIN 2013 VEF-PEN-COP											

Nº plano / Drawing Nr.	Firma	Fecha / Date	Denominación / Denomination:	Lamina / Sheet
C-3237	Iban R.	2014-03	LAVADORAS LN CUBA-ARMAZON / TUB-FRAME	3

Fagor Industrial S.Coop.
Oñate

FAGOR

ITEM MARCADO EN COLOR = REPUESTO RECOMENDADO
COLOURED ITEM = RECOMMENDED SPARE PART

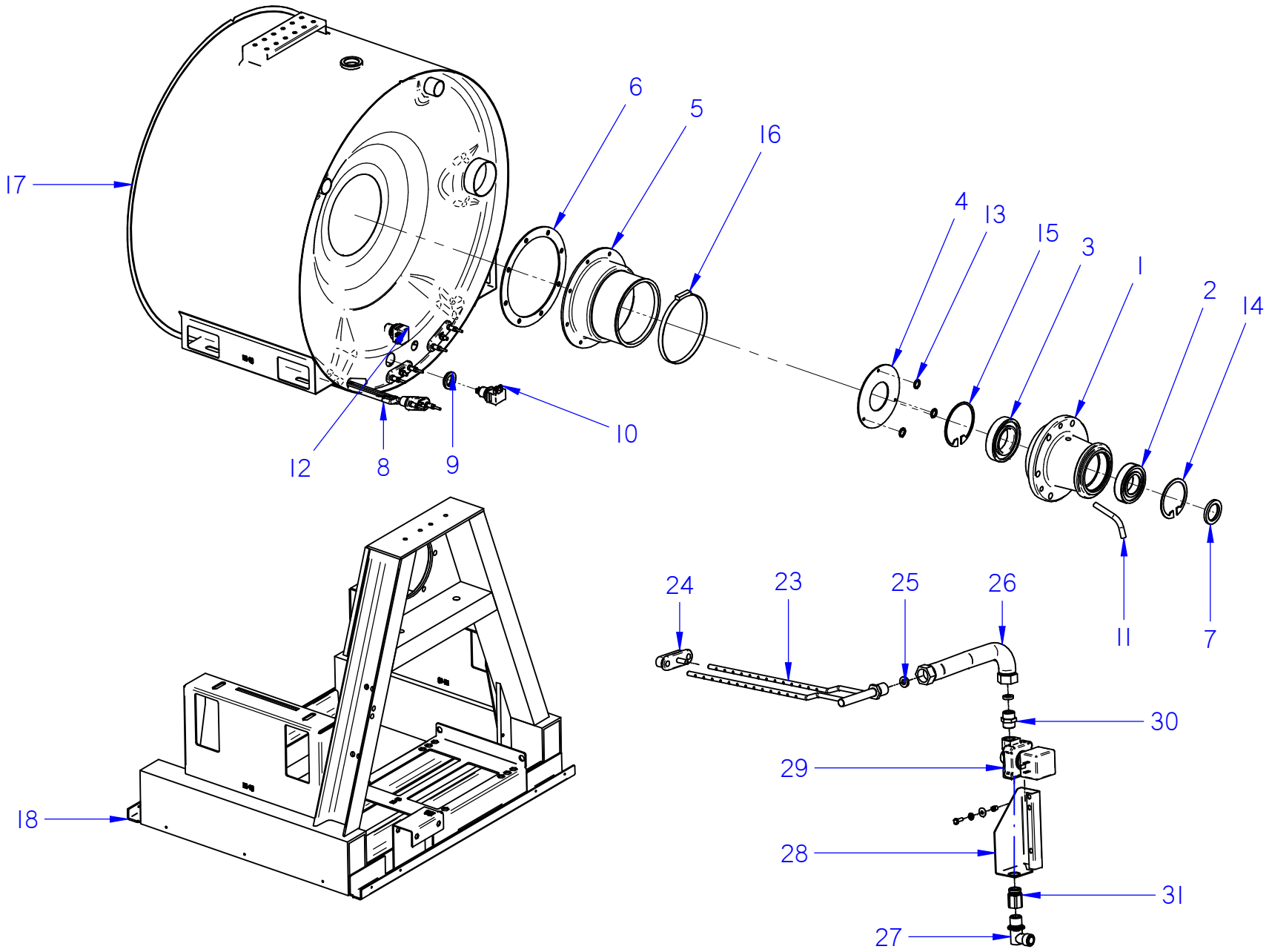

MOD.	LAVADORAS / WASHING MACHINES	ZONA / ZONE	CUBA-ARMAZON / TUB-FRAME	PLANO DIAGRAM	C-3237

ITEM	CODIGO REFERENCE	DENOMINACION	DENOMINATION	LN-10 / LN-11	LN-13	LN-18	LN-25	LN-35				ELIMINADO ELIMINATED	INTRODUCID. INTRODUCED	NOTAS
1	12047101	SOP RODAMIENTOS LN-10 MECANIZ	MECHANIIZED BEARING SUPPORT	1										
1	12095450	SOP RODAMIENTOS 10 MECANIZAD	MECHANIIZED BEARING SUPPORT		1									
1	12095451	SOP. RODAMIENTOS 13 MECANIZAI	MECHANIIZED BEARING SUPPORT			1								
1	12095452	SOP. RODAMIENTOS 18 MECANIZAI	MECHANIIZED BEARING SUPPORT				1							
1	12095453	SOP. RODAMIENTOS 25 MECANIZAI	MECHANIIZED BEARING SUPPORT					1						
2	12047104	RODAMIENTO 6208 40X80X18	BEARING 6208 40X80X19	1										
2	12024905	RODAMIENTO 45/85/19	BEARING 45/85/19		1									
2	12023485	RODAMIENTO 6212-2RS1	BEARING 6212-2RS1			1	1							
2	12023428	RODAMIENTO 6312-2Z	BEARING 6312-2Z					1						
3	12024886	RODAMIENTO 6210-2Z	BEARING 6210-2Z	1		1								
3	12024842	RODAMIENTO 55/100/21	BEARING 55/100/21		1									
3	12023445	RODAMIENTO 6214-2RS1	BEARING 6214-2RS1				1							
3	12023411	RODAMIENTO 6216-2RS1	BEARING 6216-2RS1					1						
4	12047599	CHAPA CONTRARETEN LISA LN-10	FLAT COUNTERSEAL SHEET LN-10	1										
4	12047324	CHAPA CONTRARETEN LISA LN-13	FLAT COUNTERSEAL SHEET LN-13		1									
4	12047932	CHAPA CONTRARETEN LISA LN-18	FLAT COUNTERSEAL SHEET LN-18			1								
4	12047136	CHAPA CONTRARETEN LN-25 LISA	FLAT COUNTERSEAL SHEET LN-25				1							
4	12047934	CHAPA CONTRARETEN LN-35 LISA	FLAT COUNTERSEAL SHEET LN-35					1						
5	12047895	CONDUCTO CUBA LN-13	TUB PIPE LN-13	1	1									
5	12047896	CONDUCTO CUBA LN-18	TUB PIPE LN-18			1								
5	12047897	CONDUCTO CUBA LN-25	TUB PIPE LN-25				1							
5	12047898	CONDUCTO CUBA LN-35	TUB PIPE LN-35					1						
6	12047939	CHAPA CONDUCTO CUBA LN-10-13	TUB PIPE SHEET LN-10-13	1	1									
6	12047942	CHAPA CONDUCTO CUBA LN-18	TUB PIPE SHEET LN-18			1								
6	12047941	CHAPA CONDUCTO CUBA LN-25	TUB PIPE SHEET LN-25				1							
6	12047943	CHAPA CONDUCTO CUBA LN-35	TUB PIPE SHEET LN-35					1						
7	12048885	CASQUILLO ADAPTADOR POLEA LN	PULLEY ADAPTER BUSHING LN-10-1	1	1									
7	12025103	CASQUILLO ADAPTADOR POLEA LN	PULLEY ADAPTER BUSHING LN-18			1								
8	12024816	RESISTENCIA LF-8	RESISTANCE LF-8	3										NOT AC MODELS
8	12023247	RESISTENCIA LF-13	RESISTANCE LF-13		3									NOT AC MODELS
8	12023242	RESISTENCIA LF-18	RESISTANCE LF-18			3								NOT AC MODELS

MOD.	LAVADORAS / WASHING MACHINES	ZONA / ZONE	CUBA-ARMAZON / TUB-FRAME	PLANO DIAGRAM	C-3237

ITEM	CODIGO REFERENCE	DENOMINACION	DENOMINATION	LN-10 / LN-11	LN-13	LN-18	LN-25	LN-35				ELIMINADO ELIMINATED	INTRODUCID. INTRODUCED	NOTAS
8	12041359	RESISTENCIA LN-25	RESISTANCE LN-25				3							NOT AC MODELS
8	12092855	RESISTENCIA LN-35	RESISTANCE LN-35					3						NOT AC MODELS
9	12024049	SOP.TERMOSTATO 1001713	THERMOSTAT SUPPORT 1001713	1	1	1	1	1						
10	12023814	SONDA FUNCIONAMIENTO	WORKING THERMOSTAT	1	1	1	1	1						
11	12025172	TUBO EVACUACION 8,13,18	DRAINAGE PIPE 8,13,18	1	1	1	1	1						
12	12047401	TERMOSTATO SEG. 115ºC UL	SAFETY THERMOSTAT 115ºC UL	1	1	1	1	1						
S/Nº	12023546	PASAMUROS BULBO	BUSHING BULB	1	1	1	1	1						
S/Nº	12007537	SOPORTE TERMOSTATO SEG.	SAFETY THERMOSTAT SUPP.	1	1	1	1	1						
13	12009912	JUNTA TOR. 5.28X8.84X1.78	O-RING 5.28X8.84X1.78	3	3	3	3	3						
14	12102684	ANILLO SEGURIDAD 80 DIN 472	LOCKING RING 80 DIN 472	1										
14	12009847	ANILLO SEG. INT. 85 DIN-472	LOCKING RING 85 DIN 472		1									
14	12009802	ANILLO SEGUR. SEEGER J110X4 DIN4	LOCKING RING J110X4 DIN472			1	1							
14	12009798	ANILLO SEG. INT 130 DIN-472	LOCKING RING 130 DIN-472					1						
15	12009858	ANILLO SEGURIDAD 90 DIN472	LOCKING RING 90 DIN 472	1		1								
15	12024621	ANILLO SEGURIDAD 100 DIN 472	LOCKING RING 100 DIN 472		1									
15	12024901	ANILLO SEGURIDAD 125 DIN 472	LOCKING RING 125 DIN 472				1							
15	12049333	ANILLO SEGURIDAD 140x4 DIN 472	LOCKING RING 140x4 DIN 472					1						
16	12049363	ABRAZAD.SINFIN DIN 3017 SW1 150-1	CLAMP DIN 3017 SW1 150-170			1	1							
16	12049362	ABRAZADERA SINFIN DIN 3017 W2 190	CLAMP DIN 3017 SW1 150-170					1						
17	12103367	REP. CUBA COMPLETA LN-10	COMPLETE TUB LN-10	1										
17	12103511	REP. CUBA COMPLETA LN-13	COMPLETE TUB LN-13		1									
17	12103823	REP. CUBA COMPLETA LN-18	COMPLETE TUB LN-18			1								
17	12103863	REP. CUBA COMPLETA LN-25	COMPLETE TUB LN-25				1							
17	12103892	REP. CUBA COMPLETA LN-35	COMPLETE TUB LN-35					1						
18	12047105	ARMAZON COMPLETO LN-10	COMPLETE FRAME LN-10	1										
18	12046848	ARMAZON COMPLETO LN-13	COMPLETE FRAME LN-13		1									
18	12041092	ARMAZON COMPLETO LN-18	COMPLETE FRAME LN-18			1								
18	12046808	ARMAZON COMPLETO LN-25	COMPLETE FRAME LN-25				1							
18	12046275	ARMAZON COMPLETO LN-35	COMPLETE FRAME LN-35					1						

MOD.	LAVADORAS / WASHING MACHINES	ZONA / ZONE	CUBA-ARMAZON / TUB-FRAME	PLANO DIAGRAM	C-3237

ITEM	CODIGO REFERENCE	DENOMINACION	DENOMINATION	LN-10 / 11 V	LN-13 V	LN-18 V	LN-25 V	LN-35 V				ELIMINADO ELIMINATED	INTRODUCID. INTRODUCED	NOTAS
23	12021970	INYECTOR VAPOR 8,13,18	STEAM JET 10,13,18	1	1	1								
23	12021640	INYECTOR VAPOR 25	STEAM JET 25, 35				1	1						
24	12024539	TAPON CIERRE COMPLETO	COMPLETE CLOUSURE CAP	2	2	2	2	2						
24	12024508	CIERRE COMPLETO	COMPLETE CLOUSURE	1	1	1	1	1						
25	12025033	ARANDELA VAPOR 8/13/18	STEAM WASHER 8/13/18	1	1	1								
25	12024365	ARANDELA TEFLON 24X15X4	STEAM WASHER 24X15X4				1	1						
26	12023461	LATIGUILLO VAP. 10-13-18 PLANO	STEAM HOSE 10-136-18 FLAT	1	1	1								
26	12023410	LATIGUILLO IZQUIERDO 25 PLANO	LEFT STEAM HOSE 25 FLAT				1							
26	12023892	MANGUERA VAPOR PLANA 40-60	FLAT STEAM HOSE 40-60					1					09.06.14	
27	12009102	CODO LATON	L-BEND	1	1	1								
27	12023591	CODO M-H 3/4" LATON	L-BEND M-H 3/4"				1	1						
28	12021873	SOPORTE VALVULA DE VAPOR	STEAM VALVE SUPPORT	1	1	1								
28	12021899	SOPORTE VALVULA DE VAPOR 25	STEAM VALVE SUPPORT 25				1	1						
29	12023340	VALVULA VAPOR 1/2 50/60HZ	STEAM VALVE 1/2 50/60HZ	1	1	1								
29	12024331	VALVULA VAPOR 3/4" 60HZ.	STEAM VALVE 3/4 60HZ				1	1						
30	12008907	MANGUITO DOBLE 1/2	1/2 DOUBLE CONNECTION	1	1	1								
30	12024396	MANGUITO 3/4	3/4 CONNECTION				1	1						
31	12008219	RACOR 1-2	1-2 CONNECTION	1	1	1								

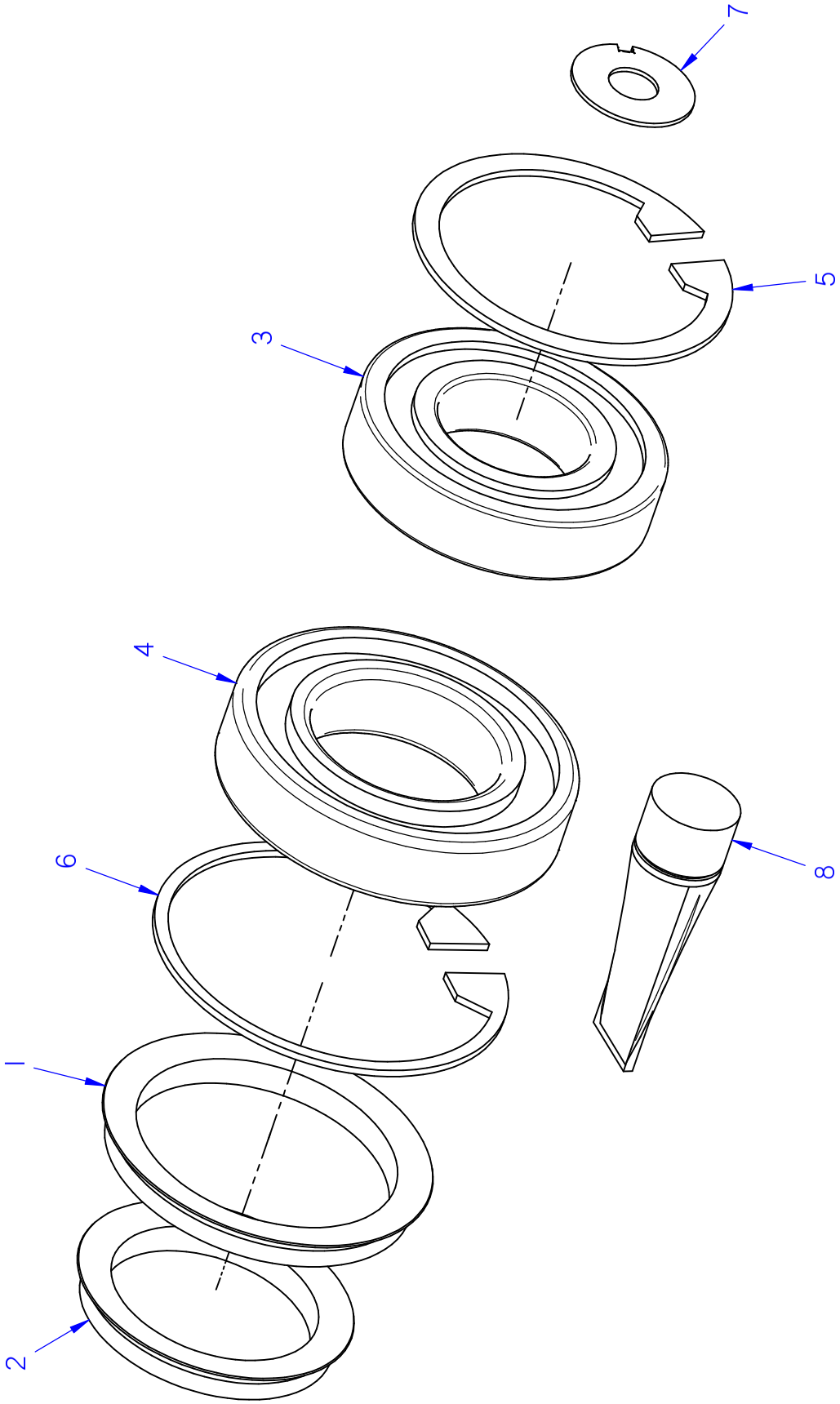

ITEM MARCADO EN COLOR = REPUESTO RECOMENDADO
COLOURED ITEM = RECOMMENDED SPARE PART

Nº plano / Drawing Nr.	Firma	Fecha / Date	Denominación / Denomination: KIT RODAMIENTOS / BEARING KIT	Lamina / Sheet	
C-3238	Iban R.	2014-03	LAVADORAS LN	4	Fagor Industrial S.Coop. FAGOR Oñate

MOD.	LAVADORAS / WASHING MACHINES	ZONA / ZONE	KIT RODAMIENTOS / BEARING KIT	PLANO DIAGRAM	C-3238

ITEM	CODIGO REFERENCE	DENOMINACION	DENOMINATION	LN-10 / LN-11	LN-13	LN-18	LN-25	LN-35				ELIMINADO ELIMINATED	INTRODUCID. INTRODUCED	NOTAS
	12111220	KIT RODAMIENTOS LN-10	BEARING KIT LN-10	1										
	12111229	KIT RODAMIENTOS LN-13	BEARING KIT LN-13		1									
	12111233	KIT RODAMIENTOS LN-18	BEARING KIT LN-18			1								
	12111234	KIT RODAMIENTOS LN-25	BEARING KIT LN-25				1							
	12111235	KIT RODAMIENTOS LN-35	BEARING KIT LN-35					1						

MOD.	LAVADORAS / WASHING MACHINES	ZONA / ZONE	KIT RODAMIENTOS / BEARING KIT	PLANO DIAGRAM	C-3238

ITEM	CODIGO REFERENCE	DENOMINACION	DENOMINATION	LN-10 / LN-11	LN-13	LN-18	LN-25	LN-35				ELIMINADO ELIMINATED	INTRODUCID. INTRODUCED	NOTAS
1	12025221	RETEN V-RING VA-70 NBR	V-RING RETAINER VA-70 NBR	1										
1	12025038	RETEN V-RING VA-80 VITON	V-RING RETAINER VA-80 VITON		1									
1	12024987	RETEN V-RING VA-85 VITON	V-RING RETAINER VA-85 VITON			1								
1	12024988	RETEN V-RING VA-95 VITON	V-RING RETAINER VA-95 VITON				1							
1	12046264	RETEN VA-110 VITON	V-RING RETAINER VA-110 VITON					1						
2	12021041	RETEN V-RING 55A NBR	V-RING RETAINER 55A NBR	1										
2	12025226	RETEN V-RING 65 NBR	V-RING RETAINER 65 NBR		1	1								
2	12025220	RETEN V-RING VA-75 NBR	V-RING RETAINER VA-75 NBR				1							
2	12046263	RETEN VA-85 NBR	V-RING RETAINER VA-85 NBR					1						
3	12047104	RODAMIENTO 6208 40X80X18	BEARING 6208 40X80X19	1										
3	12024842	RODAMIENTO 55/100/21	BEARING 55/100/21		1									
3	12023485	RODAMIENTO 6212-2RS1	BEARING 6212-2RS1			1	1							
3	12023428	RODAMIENTO 6312-2Z	BEARING 6312-2Z					1						
4	12024886	RODAMIENTO 6210-2Z	BEARING 6210-2Z	1		1								
4	12024905	RODAMIENTO 45/85/19	BEARING 45/85/19		1									
4	12023445	RODAMIENTO 6214-2RS1	BEARING 6214-2RS1				1							
4	12023411	RODAMIENTO 6216-2RS1	BEARING 6216-2RS1					1						
5	12102684	ANILLO SEGURIDAD 80 DIN 472	LOCKING RING 80 DIN 472	1										
5	12009847	ANILLO SEG. INT. 85 DIN-472	LOCKING RING 85 DIN-472		1									
5	12009802	ANILLO SEGUR. SEEGER J110X4 DIN4	LOCKING RING J110X4 DIN472			1	1							
5	12009798	ANILLO SEG. INT 130 DIN-472	LOCKING RING 130 DIN-472					1						
6	12009858	ANILLO SEGURIDAD 90 DIN472	LOCKING RING 90 DIN 472	1		1								
6	12024621	ANILLO SEGURIDAD 100 DIN 472	LOCKING RING 100 DIN 472		1									
6	12024901	ANILLO SEGURIDAD 125 DIN 472	LOCKING RING 125 DIN 472				1							
6	12049333	ANILLO SEGURIDAD 140x4 DIN 472	LOCKING RING 140x4 DIN 472					1						
7	12009896	ARANDELA SEG. POLEA	SAFETY WASHER PULLEY	1	1	1	1	1						
8	12024888	GRASA AMBLYGON TA 15/2	GREASE AMBLYGON TA 15/3	1	1	1	1	1						

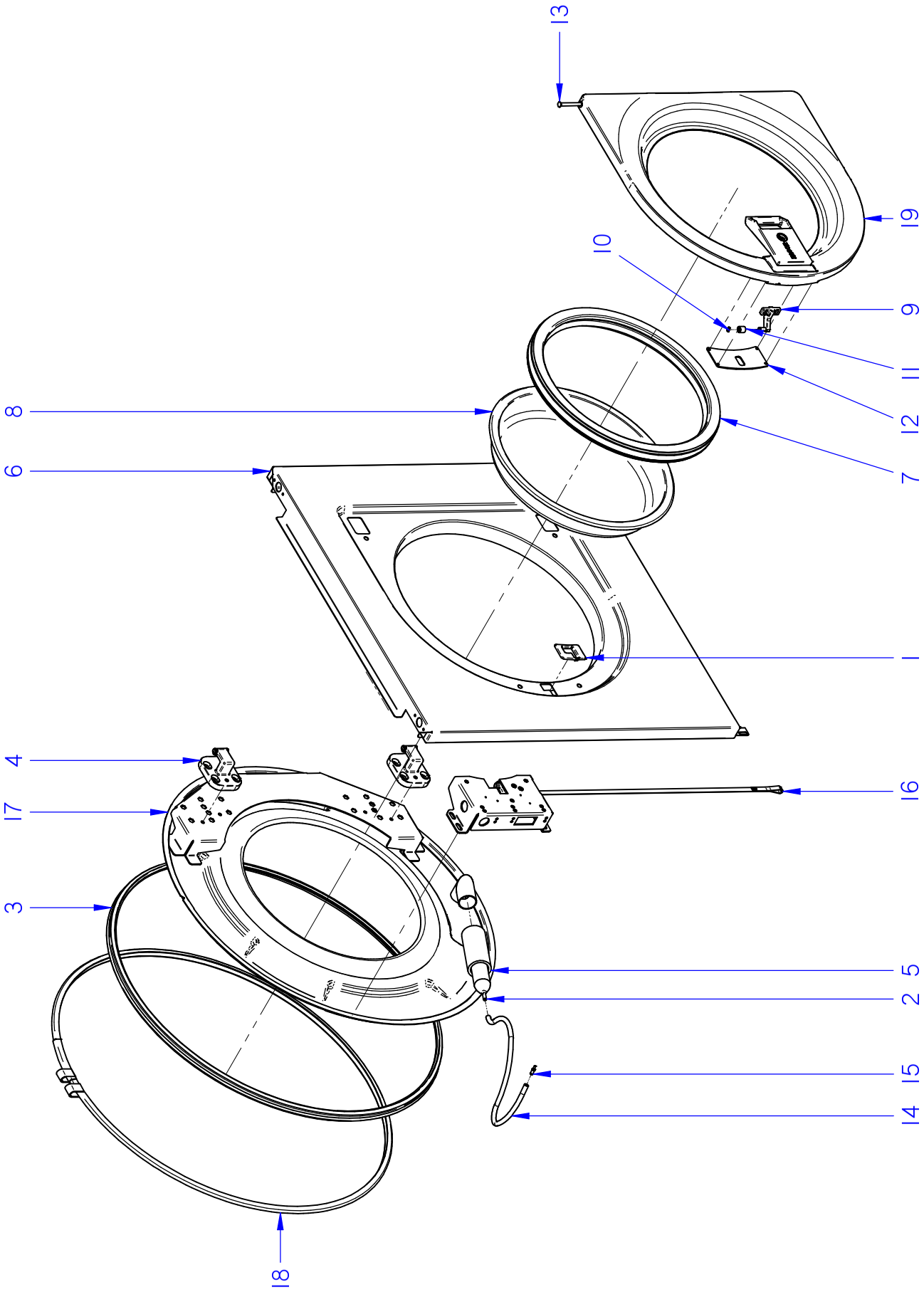

ITEM MARCADO EN COLOR = REPUESTO RECOMENDADO
COLOURED ITEM = RECOMMENDED SPARE PART

Nº plano / Drawing Nr.	Firma	Fecha / Date	Denominación / Denomination: FRENTE CUBA	Lamina / Sheet	
C-3239	Iban R	2014-03	LAVADORAS LN	5	Fagor Industrial S.Coop. FAGOR Oñate

MOD.	LAVADORAS / WASHING MACHINES	ZONA / ZONE	FRENTE CUBA / TUB FRONT	PLANO DIAGRAM	C-3239

ITEM	CODIGO REFERENCE	DENOMINACION	DENOMINATION	LN-10 / LN-11	LN-13	LN-18	LN-25	LN-35				ELIMINADO ELIMINATED	INTRODUCID. INTRODUCED	NOTAS
1	12096278	EMBELLECEDOR CIERRE	LOCK TRIM	1	1	1	1	1						
2	12024073	CAMARA PRESOSTATO	PRESSURE SWITCH	1	1	1	1	1						
3	12023268	JUNTA CUBA 13	TUB SEAL 13	1	1									
3	12023260	JUNTA CUBA 18	TUB SEAL 18			1								
3	12023255	JUNTA CUBA 25	TUB SEAL 25				1							
3	12049084	JUNTA CUBA LN-35	TUB SEAL LN-35					1					09.06.14	
4	12024977	BISAGRA PUERTA	DOOR HINGE	2	2	2	2							
4	12046248	BISAGRA PUERTA V2	DOOR HINGE V2					2						
5	12024393	TUBO REBOSADERO	OVERFLOW HOSE	1	1	1	1	1						
6	12046885	PANEL FRONTAL LN-10-13	FRONT PANEL											MUEBLE / CABINET
7	12023284	JUNTA PUERTA 13,18,25	DOOR SEAL	1	1	1	1							
7	12048069	JUNTA PUERTA LN-35 (AUER)	DOOR SEAL (AUER)					1						
8	12024758	MIRILLA PUERTA	DOOR WINDOW	1	1	1	1							
8	12048068	MIRILLA PUERTA LN-35 (AUER)	DOOR WINDOW (AUER)					1						
9	12023347	GANCHO REGULABLE CIERRE	REGULABLE LOCK HOOK	1	1	1	1	1						
10	12010155	ANILLO SEG. A6 DIN471	LOCKING RING A6 DIN471	1	1	1	1	1						
11	12025215	CASQUILLO PUERTA	DOOR BUSHING	1	1	1	1	1						
12	12021912	TAPA CIERRE PRIMER 13,18	LID CLOSURE 13, 18	1	1	1	1							
12	12048681	TAPA MANETA LN-35	LID CLOSURE LN-35					1						
13	12025202	PASADOR PUERTA	DOOR PIN	2	2	2	2							
13	12048691	PASADOR LN-35 D10x55	DOOR PIN LN-35 D10x55					2						
S/Nº	12048628	COJINETE SELF-OIL	SELF-OIL BUSHING					2						
14	11000066	TUBO GOMA NEGRO Ø 8*4	BLACK RUBBER HOSE Ø 8*4	1	1	1	1	1						
15	12025248	REDUCCION PRESOSTATO	PRESSURE SWITCH REDUCTION	1	1	1	1	1						
16	12038446	REP. CIERRE FAGOR 13,18,25	COMPLETE LOCK FAGOR	1	1	1	1							
16	12110579	REP. CIERRE FAGOR 35	COMPLETE LOCK FAGOR					1						
17	12044429	REP. FRENTE CUBA COMPLETA 13	COMPLETE TUB FRONT	1	1									
17	12103825	REP. FRENTE CUBA COMPLETA 18	COMPLETE TUB FRONT			1								
17	12110632	REP. FRENTE CUBA COMPLETA 25	COMPLETE TUB FRONT				1							
17	12110580	REP. FRENTE CUBA COMPLETA 35	COMPLETE TUB FRONT					1						

MOD.	LAVADORAS / WASHING MACHINES	ZONA / ZONE	FRENTE CUBA / TUB FRONT	PLANO DIAGRAM	C-3239

ITEM	CODIGO REFERENCE	DENOMINACION	DENOMINATION	LN-10 / LN-11	LN-13	LN-18	LN-25	LN-35				ELIMINADO ELIMINATED	INTRODUCID. INTRODUCED	NOTAS
18	12023103	CIERRE CUBA COMPL. 13	COMPLETE TUB ENCLOSURE 13	1	1									
18	12023108	CIERRE CUBA 18 COMPL.	COMPLETE TUB ENCLOSURE 18			1								
18	12023105	CIERRE CUBA 25 COMPL.	COMPLETE TUB ENCLOSURE 25				1							
18	12049772	CIERRE CUBA 35 COMP	COMPLETE TUB ENCLOSURE 35					1						
19	12007725	PUERTA FAGOR 2010 13,18,25	FAGOR DOOR 2010 13, 18, 25	1	1	1	1							
19	12103938	PUERTA FAGOR 2010 35	FAGOR DOOR 35					1						
S/Nº	12025006	(P620527) PUERTA 13,18	DOOR 13, 18	1	1	1	1							
S/Nº	12049345	PUERTA PINTADA 35	PAINTED DOOR 35					1						
S/Nº	12010370	MANETA PUERTA FAGOR	DOOR HANDLE FAGOR	1	1	1	1	1						
S/Nº	12097007	MANETA COMP LN-35	COMPLETE DOOR HANDLE FAGOR	1	1	1	1	1						HANDLE+KNOB
S/Nº	12000752	POMO FAGOR 2010	KNOB FAGOR 2010	1	1	1	1	1						
S/Nº	12016778	PASADOR CIERRE	LOCK PIN	2	2	2	2	2						
S/Nº	12023383	MUELLE CIERRE	LOCK SPRING	1	1	1	1	2						

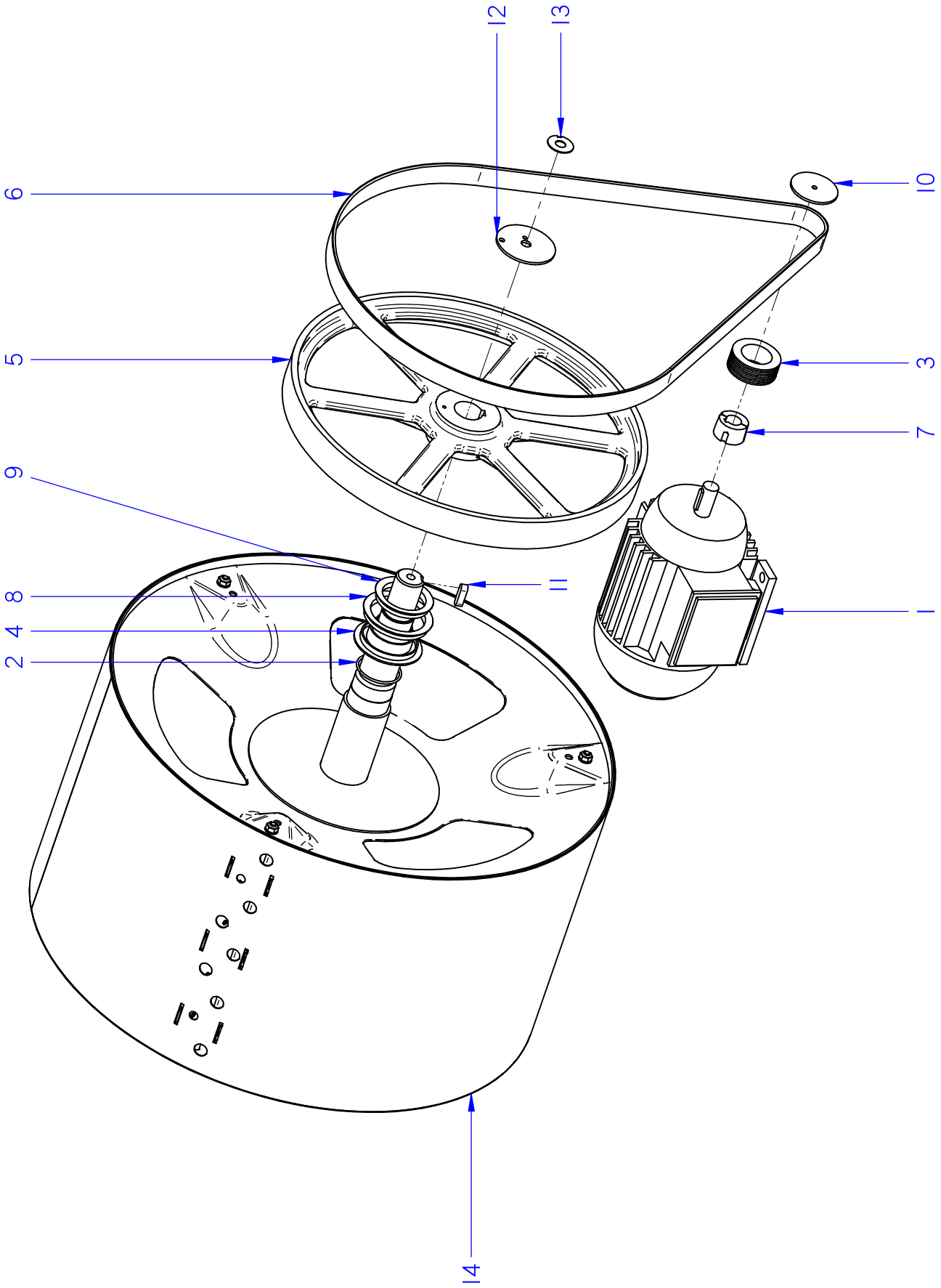

ITEM MARCADO EN COLOR = REPUESTO RECOMENDADO
COLOURED ITEM = RECOMMENDED SPARE PART

Nº plano / Drawing Nr.	Firma	Fecha / Date	Denominación / Denomination: TAMBOR / DRUM	Lamina / Sheet	
C-3240	Iban R.	2014-03	LAVADORAS LN	6	Fagor Industrial S.Coop. FAGOR Oñate

MOD.	LAVADORAS / WASHING MACHINES	ZONA / ZONE	TAMBOR / DRUM	PLANO DIAGRAM	C-3240

ITEM	CODIGO REFERENCE	DENOMINACION	DENOMINATION	LN-10 / LN-11	LN-13	LN-18	LN-25	LN-35					ELIMINADO ELIMINATED	INTRODUCID. INTRODUCED	NOTAS
1	12047485	MOTOR 230V AC 3 50Hz 0,75KW	ENGINE 230V AC 3 50Hz 0,75KW	1											
1	12049374	MOTOR 230V AC 3 50Hz 1,1KW	ENGINE 230V AC 3 50Hz 1,1KW		1										
1	12041186	MOTOR 230V AC 3 50Hz 1,5KW	ENGINE 230V AC 3 50Hz 1,5KW			1									
1	12047170	MOTOR 230V AC 3 50Hz 2,2KW	ENGINE 230V AC 3 50Hz 2,2KW				1								
1	12046367	MOTOR 230V AC 3 50Hz 3KW	ENGINE 230V AC 3 50Hz 3KW					1							
2	12010172	JUNTA TOR. 43,01x37,77x2,62	O-RING 43,01x37,77x2,62	1											
2	12010067	JUNTA TOR. 60X3	O-RING 60x3		1	1									
2	12010054	JUNTA TOR.69x3	O-RING 69x3				1								
2	12010019	JUNTA TOR.82x3	O-RING 82x3					1							
3	12049378	POLEA MOTOR LN-10-13-18	ENGINE PULLEY LN10-13-18	1	1	1									
3	12041188	POLEA MOTOR LN-25	ENGINE PULLEY LN-25				1								
3	12049294	POLEA MOTOR LN-35	ENGINE PULLEY LN-35					1							
S/Nº	12010264	VARILLA ROSCAD M6x10 DIN913	THREADED ROD M6x10 DIN913					1							
4	12047601	CASQUILLO EJE LN-10	AXIS BUSHING LN-10	1											
4	12047327	CASQUILLO EJE LN-13	AXIS BUSHING LN-13		1										
4	12041183	CASQUILLO EJE LN-18	AXIS BUSHING LN-18			1									
4	12046821	CASQUILLO EJE LN-25	AXIS BUSHING LN-25				1								
4	12046262	CASQUILLO EJE LN-35	AXIS BUSHING LN-35					1							
5	12048790	POLEA TAMBOR LN-10-13	DRUM PULLEY LN-10-13	1	1										
5	12041189	POLEA TAMBOR LN-18-25-35	DRUM PULLEY LN-18-25-35			1	1	1							
6	12049376	CORREA POLY-V 8PJ1752 (LN-10-1	BELT POLY-V 8PJ1752 (LN-10-13)	1	1										
6	12041190	CORREA POLY-V 8PJ1895 (LN-18)	BELT POLY-V 8PJ1895 (LN-18)			1									
6	12047172	CORREA POLY-V 12PJ1956 (LN-25)	BELT POLY-V 12PJ1956 (LN-25)				1								
6	12046375	CORREA POLY-V 12PJ1992 (LN-35)	BELT POLY-V 12PJ1992 (LN-35)					1							
7	12091726	CASQUILLO TAPER LOCK 1108x19	TAPER LOCK BUSHING 1108x19	1											
7	12091448	CASQUILLO TAPER LOCK 1108x24	TAPER LOCK BUSHING 1108x24		1	1									
7	12091430	CASQUILLO TAPER LOCK 1108x28	TAPER LOCK BUSHING 1108x28				1								

MOD.	LAVADORAS / WASHING MACHINES	ZONA / ZONE	TAMBOR / DRUM	PLANO DIAGRAM	C-3240

ITEM	CODIGO REFERENCE	DENOMINACION	DENOMINATION	LN-10 / LN-11	LN-13	LN-18	LN-25	LN-35					ELIMINADO ELIMINATED	INTRODUCID. INTRODUCED	NOTAS
8	12025221	RETEN V-RING VA-70 NBR	V-RING RETAINER VA-70 NBR	1											
8	12025038	RETEN V-RING VA-80 VITON	V-RING RETAINER VA-80 VITON		1										
8	12024987	RETEN V-RING VA-85 VITON	V-RING RETAINER VA-85 VITON			1									
8	12024988	RETEN V-RING VA-95 VITON	V-RING RETAINER VA-95 VITON				1								
8	12046264	RETEN VA-110 VITON	V-RING RETAINER VA-110 VITON					1							
9	12021041	RETEN V-RING 55A NBR	V-RING RETAINER 55A NBR	1											
9	12025226	RETEN V-RING 65 NBR	V-RING RETAINER 65A NBR		1	1									
9	12025220	RETEN V-RING VA-75 NBR	V-RING RETAINER VA-75 NBR				1								
9	12046263	RETEN VA-85 NBR	V-RING RETAINER VA-85 NBR					1							
10	12094052	ARANDELA POLEA MOTOR LN-10	ENGINE PULLEY WASHER LN-10	1											
10	12049398	ARANDELA POLEA MOTOR LN-18	ENGINE PULLEY WASHER LN-18		1	1									
10	12103750	ARANDELA POLEA MOTOR LN-25	ENGINE PULLEY WASHER LN-25				1								
10	12049379	ARANDELA POLEA MOTOR LN-35	ENGINE PULLEY WASHER LN-35					1							
11	12043164	CHAVETA 10x8x30 DIN6885 TIPO A	COTTER PIN 10x8x30 DIN6885 A	1	1										
11	12025213	CHAVETA TIPO A 14x9x50 DIN 6885	COTTER PIN 14x9x50 DIN 6885 A			1	1	1							
12	12021832	ARANDELA POLEA 13,18	PULLEY WASHER 13, 18	1	1	1	1	1							
13	12009896	ARANDELA SEGURIDAD 13	LOCKING RING 13	1	1	1	1	1							
14	12103366	REP. TAMBOR COMPLETO LN-10	COMPLETE DRUM LN-10	1											
14	12103503	REP. TAMBOR COMPLETO LN-13	COMPLETE DRUM LN-13		1										
14	12103588	REP. TAMBOR COMPLETO LN-18	COMPLETE DRUM LN-18			1									
14	12103847	REP. TAMBOR COMPLETO LN-25	COMPLETE DRUM LN-25				1								
14	12103890	REP. TAMBOR COMPLETO LN-35	COMPLETE DRUM LN-35					1							

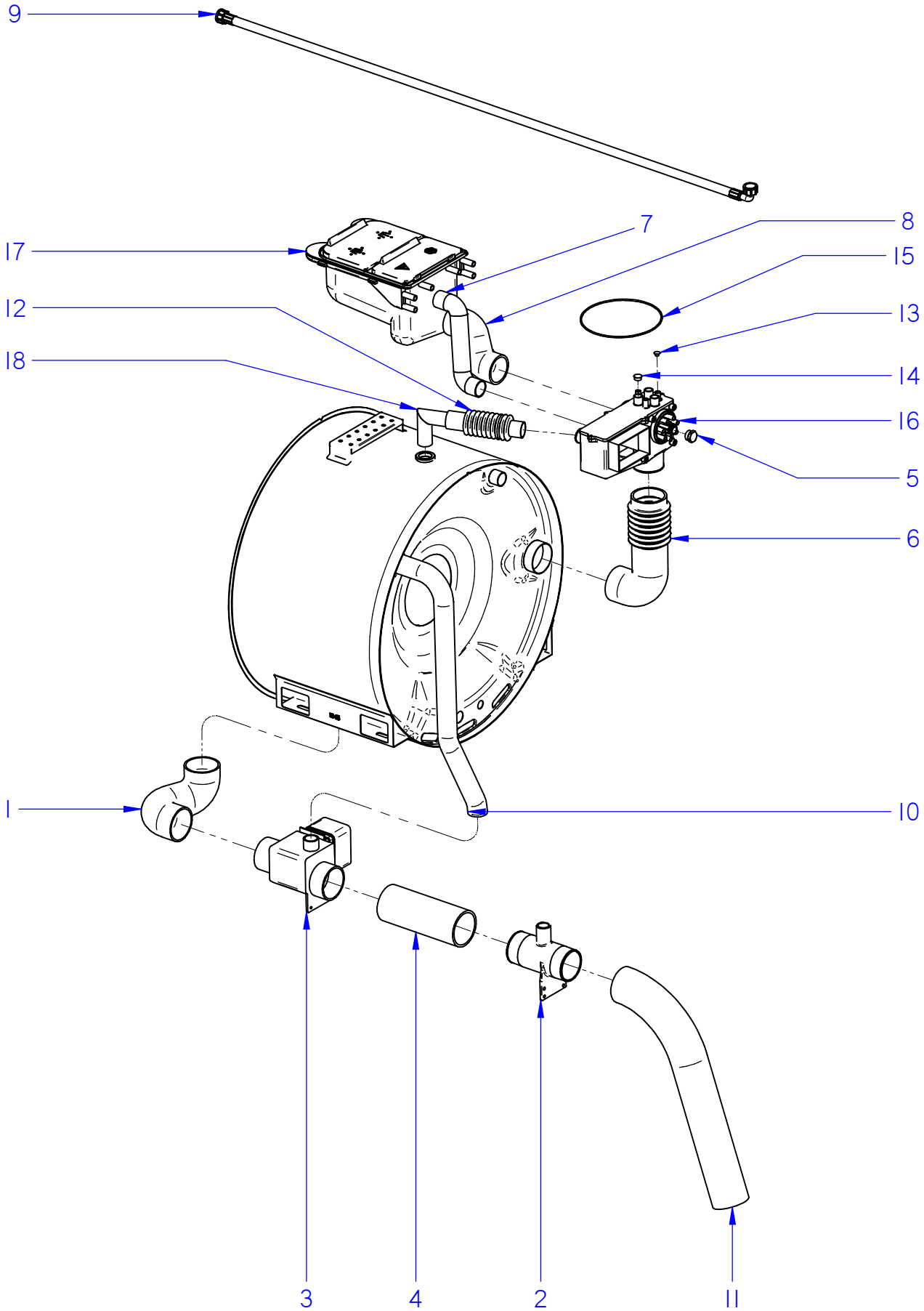

ITEM MARCADO EN COLOR = REPUESTO RECOMENDADO
COLOURED ITEM = RECOMMENDED SPARE PART

Nº plano / Drawing Nr.	Firma	Fecha / Date	Denominación / Denomination: CUBETERA / TRAY	Lamina / Sheet	
C-3241	Iban R.	2014-03	LAVADORAS LN	7	Fagor Industrial S.Coop. FAGOR Oñate

MOD.	LAVADORAS / WASHING MACHINES	ZONA / ZONE	CUBETERA / TRAY	PLANO DIAGRAM	C-3241

ITEM	CODIGO REFERENCE	DENOMINACION	DENOMINATION	LN-10 / LN-11	LN-13	LN-18	LN-25	LN-35					ELIMINADO ELIMINATED	INTRODUCID. INTRODUCED	NOTAS
1	12044165	CONDUCTO DESAGUE INTERIOR	INNER DRAINAGE PIPE	1	1	1									
1	12025016	CONDUCTO DESAGUE INTERIOR	INNER DRAINAGE PIPE				1								
1	12007746	CONDUCTO DOSIF-CUBA 40-60	INNER DRAINAGE PIPE					1							
2	12046868	SALIDA DESAGUE 3"	DRAINAGE OUTPUT 3"	1	1	1	1	1							
3	12024404	VALVULA VACIADO	DRAINAGE VALVE	1	1	1	1	1							
4	12091784	COND. VALVULA-SALIDA LN-10	VALVE-OUTPUT PIPE LN-10	1											
4	12046143	COND. VALVULA-SALIDA 10-13	VALVE-OUTPUT PIPE 10-13		1	1									
4	12046140	COND. VALVULA-SALIDA 18-25	VALVE-OUTPUT PIPE 18-25				1	1							
5	12025254	TAPA 1/2"	COVER 1/2"	1	1	1	1	1							
6	12023263	CONDUCTO COLECTOR-CUBA	COLLECTOR BOX-TUP PIPE	1	1										
6	12025016	CONDUCTO COLECTOR-CUBA	COLLECTOR BOX-TUP PIPE			1									
6	12025017	CONDUCTO COLECTOR-CUBA	COLLECTOR BOX-TUP PIPE				1	1							
7	12091758	COND. REBOSAD.-CUBET. LN-10	TRAY OVERFLOW PIPE LN-10	1											
7	12007856	COND. REBOSAD. CUBETERA 10	TRAY OVERFLOW PIPE 10		1	1									
7	12007825	COND. REBOS. CUBET. ESWM-40	TRAY OVERF. PIPE ESWM-40				1								
7	12007811	COND. REBOS. CUBET. ESWM-60	TRAY OVERF. PIPE ESWM-60					1							
8	12091756	CONDUCTO CUBETERA LN-10	TRAY PIPE LN-10	1											
8	12007772	CONDUCTO CUBETERA 10 V2	TRAY PIPE 10 V2		1	1									
8	12007763	CONDUCTO CUBETERA ESWM-40	TRAY PIPE ESWM-40				1								
8	12007756	CONDUCTO CUBETERA ESWM-60	TRAY PIPE ESWM-60					1							
9	12024115	MANGUERA ENTRADA AGUA	WATER INLET PIPE	1	1	1	1	1							
10	12023265	CONDUCTO REBOSADERO 8	TUP OVERFLOW PIPE	1	1										
10	12023271	CONDUCTO REBOSADERO 13	TUP OVERFLOW PIPE			1									
10	12024866	CONDUCTO REBOSADERO 18	TUP OVERFLOW PIPE				1	1							
11	12024890	CONDUCTO CUBETERA LA-25	TRAY PIPE LA-25	1	1	1	1	1							
12	12023308	CONDUCTO SALIDA VAPOR	STEAM OUTPUT PIPE	1											
12	12007821	MANGUERA SALIDA VAPOR	STEAM OUTPUT HOSE		1	1	1	1							
13	12010034	TAPON CAJA COLECTOR 8	COLLECTOR BOX PLUG 8	3	3	3	3	3							
14	12010013	TAPON CAJA COLECTOR 16	COLLECTOR BOX PLUG 16	1	1	1	1	1							
15	12008049	JUNTA TAPA CAJA COLECTOR	COLLECTOR BOX COVER SEAL	1	1	1	1	1							
16	12009717	CAJA COLECTOR COMPLETA	COMPLETE COLLECTOR BOX	1	1	1	1	1							

MOD.	LAVADORAS / WASHING MACHINES	ZONA / ZONE	CUBETERA / TRAY	PLANO DIAGRAM	C-3241

ITEM	CODIGO REFERENCE	DENOMINACION	DENOMINATION	LN-10 / LN-11	LN-13	LN-18	LN-25	LN-35					ELIMINADO ELIMINATED	INTRODUCID. INTRODUCED	NOTAS
17	12007752	CUBETA DE DETERGENTES	DETERGENTS TRAY	1	1	1	1	1							
S/Nº	12010483	EJE TAPAS CUBETA	TRAY COVERS AXIS	2	2	2	2	2							
S/Nº	12010403	TAPA 1	COVER 1	1	1	1	1	1							
S/Nº	12000747	TAPA 2	COVER 2	1	1	1	1	1							
S/Nº	12010088	TAPON CUBETA DETERGENTES	DETERGENT TRAY CAP	2	2	2	2	2							
18	12040883	CODO SALIDA VAPOR	STEAM OUTPUT ELBOW	1											

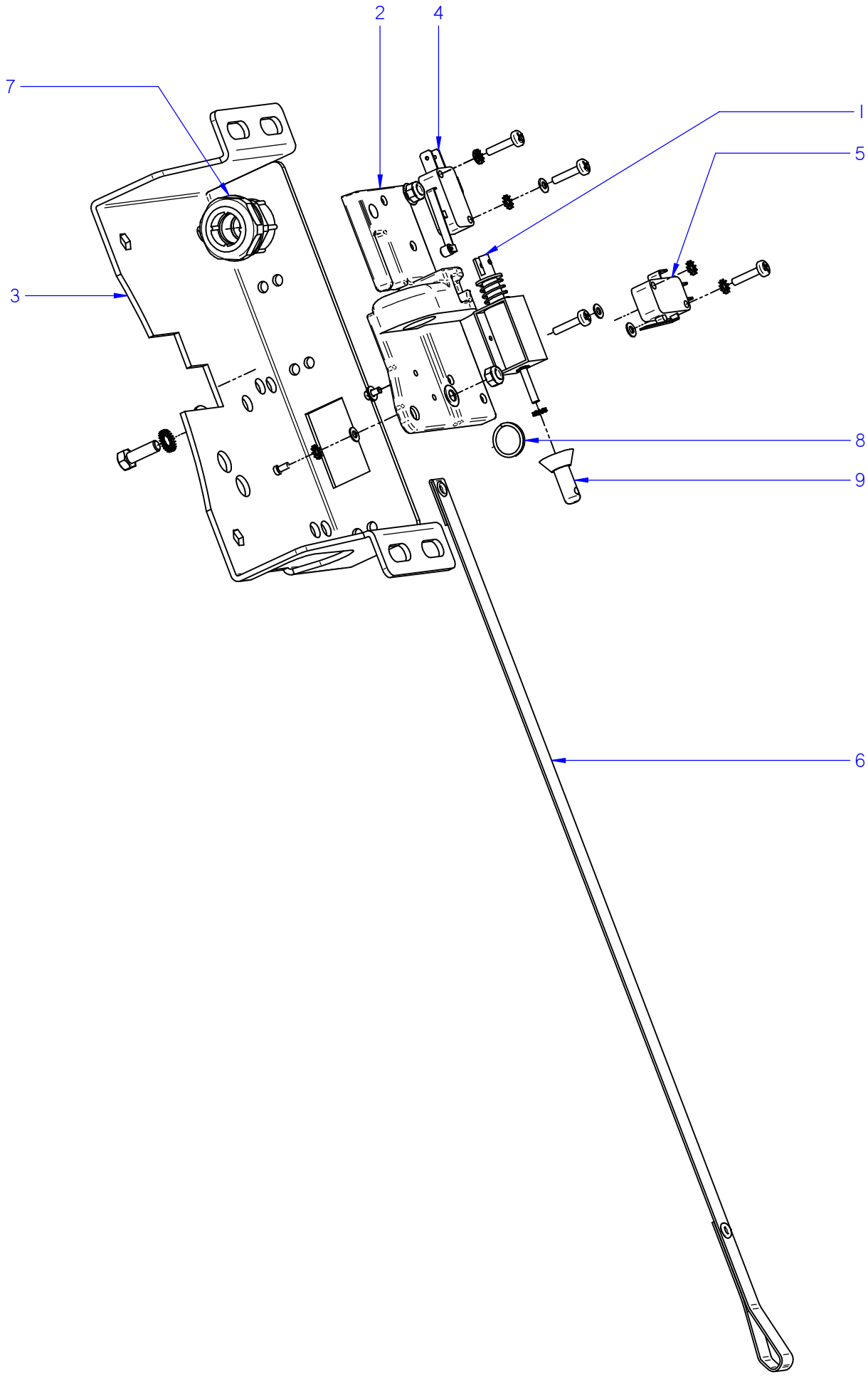

ITEM MARCADO EN COLOR = REPUESTO RECOMENDADO
COLOURED ITEM = RECOMMENDED SPARE PART

Nº plano / Drawing Nr	Firma	Fecha / Date	Denominación / Denomination: CIERRE COMPLETO / COMPLETE LOCK	Lamina / Sheet	
C-3244	Iban R.	2014-03	LAVADORAS LN	8	Fagor Industrial S.Coop. FAGOR Oñate

MOD.	LAVADORAS / WASHING MACHINES	ZONA / ZONE	CIERRE / LOCK	PLANO DIAGRAM	C-3244

ITEM	CODIGO REFERENCE	DENOMINACION	DENOMINATION	LN-10 / LN-11	LN-13	LN-18	LN-25	LN-35					ELIMINADO ELIMINATED	INTRODUCID. INTRODUCED	NOTAS
1	12023211	ELECTROIMAN PUERTA	DOOR ELECTROMAGNET	1	1	1	1	1							
2	12009797	BASE CIERRE V3	LOCK BASE V3	1	1	1	1	1							
3	12001330	CALZO CIERRE FAGOR 13,18,25	FAGOR LOCK WEDGE 13, 18, 25	1	1	1	1								
3	12049155	CAJA CIERRE LN-35	LOCK BOX LN-35					1							
S/Nº	12048900	TAPA CIERRE LN-35	LOCK COVER LN-35					1							
4	12025193	INTERRUPTOR PUERTA	DOOR SWITCH	1	1	1	1	1							
5	12025218	INTERRUPTOR PUERTA PLANO	FLAT DOOR SWITCH	1	1	1	1	1							
6	12023332	TIRADOR PUERTA	DOOR PULL	1	1	1	1	1							
7	12009966	PRENSA ESTOPAS	STUFFING BOX	1	1	1	1	1							
8	12023427	ANILLO ELECTROIMAN	ELECTROMAGNET RING	1	1	1	1	1							
9	12025182	DESBLOQUEO	UNLOCK	1	1	1	1	1							
S/Nº	12025102	CABLEADO PUERTA	DOOR WIRING	1	1	1	1	1							
S/Nº	12025298	TERMINAL 0,5 COD.901901	TERMINAL 0,5 COD.901901	1	1	1	1	1							

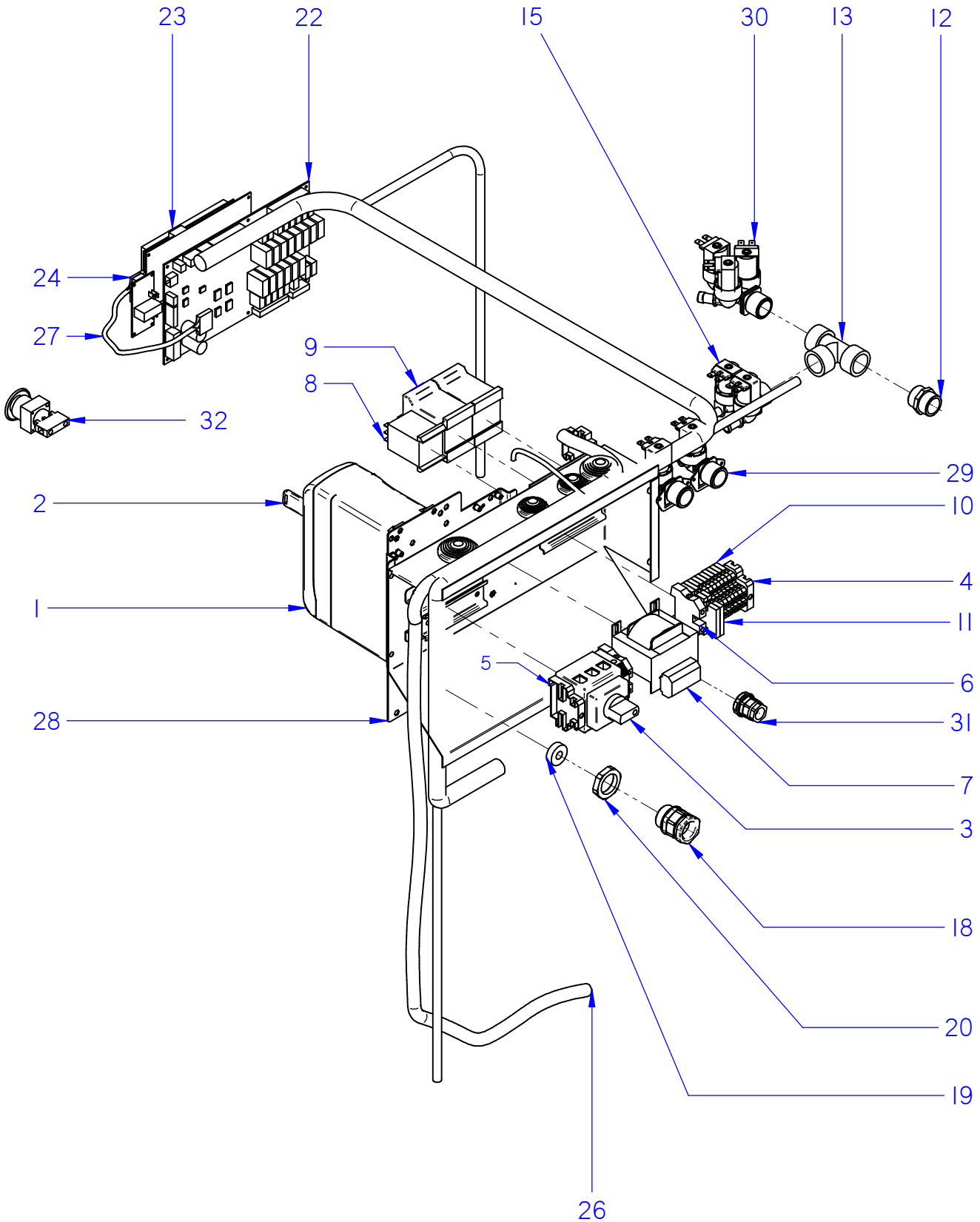

ITEM MARCADO EN COLOR = REPUESTO RECOMENDADO
COLOURED ITEM = RECOMMENDED SPARE PART

Nº plano / Drawing Nr	Firma	Fecha / Date	Denominación / Denomination: CUADRO ELECTRICO /	Lamina / Sheet	
C-3242	Iban R.	2014-03	LAVADORAS LN	9	Fagor Industrial S.Coop. FAGOR Oñate

MOD.	LAVADORAS / WASHING MACHINES	ZONA / ZONE	CUADRO ELECTRICO / ELECTRIC PANEL	PLANO DIAGRAM	C-3242

ITEM	CODIGO REFERENCE	DENOMINACION	DENOMINATION	LN-10 / 11 E	LN-10/11 AC	LN-10 / 11 V	LN-13 E	LN-13 AC	LN-13 V	LN-18 E	LN-18 AC	LN-18 V	ELIMINADO ELIMINATED	INTRODUCID. INTRODUCED	NOTAS
1	12103360	REP. VARIADOR LN -10	REP. VARIATOR LN-10	1	1	1									
1	12103498	REP. VARIADOR LN -13	REP. VARIATOR LN-13				1	1	1						
1	12103585	REP. VARIADOR LN -18	REP. VARIATOR LN-18							1	1	1			
2	12103706	REP. PLC PROGRAMADA LN 10	PLC PROGRAMMED LN-10	1	1	1									
2	12103709	REP. PLC PROGRAMADA LN 13	PLC PROGRAMMED LN-13				1	1	1						
2	12103821	REP. PLC PROGRAMADA LN 18	PLC PROGRAMMED LN-18							1	1	1			
3	12024858	SECCIONADOR	CIRCUIT BREAKER	1	1	1		1	1		1	1			
3	12024628	SECCIONADOR	CIRCUIT BREAKER				1			1					
4	12024199	TOPE FINAL	END STOP	2	2	2	2	2	2	2	2	2			
5	12025143	BORNA AZUL	BLUE TEMINAL	1	1	1	1	1	1	1	1	1			
6	12024515	BORNA DE TIERRA	EARTH TERMINAL	1	1	1	1	1	1	1	1	1			
7	12024920	TRANSFORMADOR	TRANSFORMER	1	1	1	1	1	1	1	1	1			
8	12023706	RELE 230V AC 50/60Hz 16A 2vía	RELAY 230V AC 50/60Hz 16A 2V	1	1	1	1	1	1	1	1	1			
9	12024040	CONTACTOR CALENTAMIENTO	HEATING CONTACTOR	2			2			2					
9	12024039	CONTACTOR CALENTAMIENTO	HEATING CONTACTOR		1			1			1				
10	12025180	REGLETA DOSIFICACION	DISPENSER TERMINAL STRIP	6	6	6	6	6	6	6	6	6			
11	12025158	BORNA PORTAFUSIBLE	FUSEHOLDER TERMINAL	2	2	2	2	2	2	2	2	2			
S/Nº	12024333	CARTUCHO FUSIBLE A4	FUSE 4A	2	2	2	2	2	2	2	2	2			
12	12024396	MANGUITO 3/4"	3/4" CONNECTION	1	1	1	1	1	1	1	1	1			
S/Nº	12025278	FILTRO DE JUNTA N-3	JOINT FILTER N-3	1	1	1	1	1	1	1	1	1			
S/Nº	12025062	RACOR PORTA FILTRO 3/4	RACOR FILTER HOLDER 3/4	1	1	1	1	1	1	1	1	1			
13	12024996	Te A 90º 3/4	T at 90º 3/4	1	1	1	1	1	1	1	1	1			
15	12023794	ELECTROVALVULA 2 VIAS	2 WAY SOLENOID VALVE	1	1	1	1	1	1	1	1	1			
18	12009927	PRENSA ESTOPA PG-21	STUFFING BOX PG-21	1	1	1	1	1	1	1	1	1			
19	12009994	JUNTA GOMA (GAES)	RUBBER SEAL	1	1	1	1	1	1	1	1	1			
20	12009764	TUERCA ROSCA Pg 21	SCREW THREAD Pg 21	1	1	1	1	1	1	1	1	1			
22	12024197	CONTROL TARJETA M/MA	CONTROL PLATE M/MA	1	1	1	1	1	1	1	1	1			
23	12024780	VISUALIZADOR M	VIEWER M	1	1	1	1	1	1	1	1	1			
24	12024634	INTERRUPTOR GENERAL	POWER SWITCH	1	1	1	1	1	1	1	1	1			
26	12007942	INSTALACION ELEC 10-13-18	ELEC. INSTALLATION 10-13-18	1	1	1	1	1	1	1	1	1			
27	12023293	CABLE COMUNICACIÓN M	COMMUNICATION CABLE M	1	1	1	1	1	1	1	1	1			

MOD.	LAVADORAS / WASHING MACHINES	ZONA / ZONE	CUADRO ELECTRICO / ELECTRIC PANEL	PLANO DIAGRAM	C-3242

ITEM	CODIGO REFERENCE	DENOMINACION	DENOMINATION	LN-10 / 11 E	LN-10/11 AC	LN-10 / 11 V	LN-13 E	LN-13 AC	LN-13 V	LN-18 E	LN-18 AC	LN-18 V	ELIMINADO ELIMINATED	INTRODUCID. INTRODUCED	NOTAS
28	12001578	CALZO VARIADOR 10-13-18	VARIATOR SHIM	1	1	1	1	1	1	1	1	1			
29	12025161	ELECTROVALVULA SIMPLE	SIMPLE SOLENOID VALVE	1	1	1	1	1	1	1	1	1			
30	12023921	ELECTROVALVULA 3 VIAS	3 WAY SOLENOID VALVE	1	1	1	1	1	1	1	1	1			
31	12009966	PRENSA ESTOPA DOSIFICACION	DISPENSER STUFFING BOX	1	1	1	1	1	1	1	1	1			

MOD.	LAVADORAS / WASHING MACHINES	ZONA / ZONE	CUADRO ELECTRICO / ELECTRIC PANEL	PLANO DIAGRAM	C-3242

ITEM	CODIGO REFERENCE	DENOMINACION	DENOMINATION	LN-25 E	LN-25 AC	LN-25 V	LN-35 E	LN-35 AC	LN-35 V				ELIMINADO ELIMINATED	INTRODUCID. INTRODUCED	NOTAS
1	12103846	REP. VARIADOR LN -25	REP. VARIATOR LN-25	1	1	1									
1	12103886	REP. VARIADOR LN -35	REP. VARIATOR LN-35				1	1	1						
2	12103847	REP. PLC PROGRAMADA LN 25	PLC PROGRAMMED LN-25	1	1	1									
2	12103889	REP. PLC PROGRAMADA LN 35	PLC PROGRAMMED LN-35				1	1	1						
3	12024858	SECCIONADOR	CIRCUIT BREAKER		1	1		1	1						
3	12024628	SECCIONADOR	CIRCUIT BREAKER	1			1								
4	12024199	TOPE FINAL	END STOP	2	2	2	2	2	2						
5	12025143	BORNA AZUL	BLUE TEMINAL	1	1	1	1	1	1						
6	12024515	BORNA DE TIERRA	EARTH TERMINAL	1	1	1	1	1	1						
7	12024920	TRANSFORMADOR	TRANSFORMER	1	1	1	1	1	1						
9	12041014	CONTACTOR CALENTAMIENTO	HEATING CONTACTOR	2			2								
9	12024040	CONTACTOR CALENTAMIENTO	HEATING CONTACTOR		1	1		1	1						
10	12025180	REGLETA DOSIFICACION	DISPENSER TERMINAL STRIP	6	6	6	6	6	6						
11	12025158	BORNA PORTAFUSIBLE	FUSEHOLDER TERMINAL	2	2	2	2	2	2						
S/Nº	12024333	CARTUCHO FUSIBLE A4	FUSE 4A	2	2	2	2	2	2						
12	12024396	MANGUITO 3/4"	3/4" CONNECTION	4	4	4	4	4	4						
S/Nº	12025278	FILTRO DE JUNTA N-3	JOINT FILTER N-3	2	2	2	2	2	2						
S/Nº	12025062	RACOR PORTA FILTRO 3/4	RACOR FILTER HOLDER 3/4	2	2	2	2	2	2						
13	12024996	Te A 90º 3/4	T at 90º 3/4	2	2	2	2	2	2						
15	12025161	ELECTROVALVULA SIMPLE	SIMPLE SOLENOID VALVE	1	1	1	1	1	1						
18	12009927	PRENSA ESTOPA PG-21	STUFFING BOX PG-21	1	1	1	1	1	1						
19	12009994	JUNTA GOMA (GAES)	RUBBER SEAL	1	1	1	1	1	1						
20	12009764	TUERCA ROSCA Pg 21	SCREW THREAD Pg 21	1	1	1	1	1	1						
22	12024197	CONTROL TARJETA M/MA	CONTROL PLATE M/MA	1	1	1	1	1	1						
23	12024780	VISUALIZADOR M	VIEWER M	1	1	1	1	1	1						
24	12024634	INTERRUPTOR GENERAL	POWER SWITCH	1	1	1	1	1	1						
26	12023366	INSTALACION ELEC 25-35	ELEC. INSTALLATION 25-35	1	1	1	1	1	1						
27	12023293	CABLE COMUNICACIÓN M	COMMUNICATION CABLE M	1	1	1	1	1	1						
28	12001564	CALZO VARIADOR 25-35	VARIATOR SHIM	1	1	1	1	1	1						
29	12023551	ELECTROVALVULA SIMPLE	SIMPLE SOLENOID VALVE	2	2	2	2	2	2						
S/Nº	12024622	BOBINADO EV SIMPLE	SIMPLE SOLENOID VALVE COIL	2	2	2	2	2	2						

MOD.	LAVADORAS / WASHING MACHINES	ZONA / ZONE	CUADRO ELECTRICO / ELECTRIC PANEL	PLANO DIAGRAM	C-3242

ITEM	CODIGO REFERENCE	DENOMINACION	DENOMINATION	LN-25 E	LN-25 AC	LN-25 V	LN-35 E	LN-35 AC	LN-35 V				ELIMINADO ELIMINATED	INTRODUCID. INTRODUCED	NOTAS
S/Nº	12024526	EMPALME	RACOR FILTER HOLDER 3/4	2	2	2	2	2	2						
30	12023921	ELECTROVALVULA 3 VIAS	3 WAY SOLENOID VALVE	1	1	1	1	1	1						
31	12009966	PRENSA ESTOPA DOSIFICACION	DISPENSER STUFFING BOX	1	1	1	1	1	1						
32	12024904	SETA 10A 1VIA 2POS					1	1	1						ONLY M MODELS

MOD.	LAVADORAS / WASHING MACHINES	ZONA / ZONE	VARIOS / VARIOUS	PLANO DIAGRAM	

ITEM	CODIGO REFERENCE	DENOMINACION	DENOMINATION	LN-10 / 11 E	LN-10/11 AC	LN-10 / 11 V	LN-13 E	LN-13 AC	LN-13 V	LN-18 E	LN-18 AC	LN-18 V	ELIMINADO ELIMINATED	INTRODUCID. INTRODUCED	NOTAS
	12025118	CABLEADO INTERRUP-GENER.	PTC + WIRING BRIDGE-RECTIF.	1	1	1	1	1	1	1	1	1			M MODELS
	12025061	CABLE. PTC+PUENTE RECTIFIC.	GENERAL SWITCH WIRING	1	1	1	1	1	1	1	1	1			
	12024944	CABLEADO RESISTENCIA	RESISTANCE WIRING L-8, 13	1			1			1					
	12023293	CABLEADO TECLADO-SIMPLE	SIMPLE-KEYBOARD WIRING	1	1	1	1	1	1	1	1	1			
	12025082	CABLEADO ARRASTRE-AC	TRAILING WIRING-AC		1			1			1				
	12025067	CABLE. ELECTR. VALV.VAPOR	STEAM VALVE WIRING			1			1			1			
	12025206	CABL. CONECTOR-PUENTE-ALIM	BRIDGE-CONNECTOR WIRING	1	1	1	1	1	1	1	1	1			MA MODELS
	12047190	CABLEADO MONEDERO C.P.	PURSE C.P WIRING	1	1	1	1	1	1	1	1	1			MA MODELS
	12024184	CABLEADO LIMITADOR	LIMITER WIRING	1	1	1	1	1	1	1	1	1			
	12103432	CABL. CONECTOR MOTOR 10-13	MOTOR CONNECTOR WIRING	1	1	1	1	1	1	1	1	1			

MOD.	LAVADORAS / WASHING MACHINES	ZONA / ZONE	VARIOS / VARIOUS	PLANO DIAGRAM	

ITEM	CODIGO REFERENCE	DENOMINACION	DENOMINATION	LN-25 E	LN-25 AC	LN-25 V	LN-35 E	LN-35 AC	LN-35 V				ELIMINADO ELIMINATED	INTRODUCID. INTRODUCED	NOTAS
	12025118	CABLEADO INTERRUP-GENER.	PTC + WIRING BRIDGE-RECTIF.	1	1	1	1	1	1						M MODELS
	12025061	CABLE. PTC+PUENTE RECTIFIC.	GENERAL SWITCH WIRING	1	1	1	1	1	1						
	12007781	CABLEADO RESISTENCIA 25	RESISTANCE WIRING 25	1											
	12103370	CABLEADO CALENTAMIENTO 35	HEATING WIRING 35				1								
	12023293	CABLEADO TECLADO-SIMPLE	SIMPLE-KEYBOARD WIRING	1	1	1	1	1	1						
	12025067	CABLE. ELECTR. VALV.VAPOR	STEAM VALVE WIRING			1			1						
	12025206	CABL. CONECTOR-PUENTE-ALIM	BRIDGE-CONNECTOR WIRING	1	1	1	1	1	1						MA MODELS
	12047190	CABLEADO MONEDERO C.P.	PURSE C.P WIRING	1	1	1	1	1	1						MA MODELS
	12024184	CABLEADO LIMITADOR	LIMITER WIRING	1	1	1	1	1	1						
	12103440	CABL. CONECTOR MOTOR 25-35	MOTOR CONNECTOR WIRING	1	1	1	1	1	1						
	12104294	CABL. PROLONG. LV 35 NTC TS	LONG. LV 35 NTC TS WIRING					1	1						

MOD.	LAVADORAS / WASHING MACHINES	ZONA / ZONE	RECOMENDADOS / RECOMMENDED	PLANO DIAGRAM	

ITEM	CODIGO REFERENCE	DENOMINACION	DENOMINATION	LN-10 / 11 E	LN-10/11 AC	LN-10 / 11 V	LN-13 E	LN-13 AC	LN-13 V	LN-18 E	LN-18 AC	LN-18 V	ELIMINADO ELIMINATED	INTRODUCID. INTRODUCED	NOTAS
1	12047485	MOTOR 230V AC 3 50Hz 0,75KW	ENGINE 230V AC 3 50Hz 0,75KW	1	1	1									C-3240
1	12049374	MOTOR 230V AC 3 50Hz 1,1KW	ENGINE 230V AC 3 50Hz 1,1KW				1	1	1						C-3240
1	12041186	MOTOR 230V AC 3 50Hz 1,5KW	ENGINE 230V AC 3 50Hz 1,5KW							1	1	1			C-3240
6	12049376	CORREA POLY-V 8PJ1752 10-13)	BELT POLY-V 8PJ1752 (10-13)	1	1	1	1	1	1						C-3240
6	12041190	CORREA POLY-V 8PJ1895 (LN-18)	BELT POLY-V 8PJ1895 (LN-18)							1	1	1			C-3240
16	12038446	REP. CIERRE FAGOR 13,18,25	COMPLETE LOCK FAGOR	1	1	1	1	1	1	1	1	1			C-3239
	12025061	CABLE. PTC+PUENTE RECTIFIC.	PTC + WIRING BRIDGE-RECTIF.	1	1	1	1	1	1	1	1	1			VARIOS
3	12024404	VALVULA VACIADO	DRAINAGE VALVE	1	1	1	1	1	1	1	1	1			C-3241
29	12025161	ELECTROVALVULA SIMPLE	SIMPLE SOLENOID VALVE	1	1	1	1	1	1	1	1	1			C-3242
30	12023921	ELECTROVALVULA 3 VIAS	3 WAY SOLENOID VALVE	1	1	1	1	1	1	1	1	1			C-3242
15	12023794	ELECTROVALVULA 2 VIAS	2 WAY SOLENOID VALVE	1	1	1	1	1	1	1	1	1			C-3242
24	12024634	INTERRUPTOR GENERAL	POWER SWITCH	1	1	1	1	1	1	1	1	1			C-3242
9	12024040	CONTACTOR CALENTAMIENTO	HEATING CONTACTOR	2			2			2					C-3242
9	12024039	CONTACTOR CALENTAMIENTO	HEATING CONTACTOR		1			1			1				C-3242
10	12023814	SONDA FUNCIONAMIENTO	WORKING THERMOSTAT	1	1	1	1	1	1	1	1	1			C-3237
S/Nº	12024333	CARTUCHO FUSIBLE A4	FUSE 4A	2	2	2	2	2	2	2	2	2			C-3242
23	12024780	VISUALIZADOR M	VIEWER M	1	1	1	1	1	1	1	1	1			C-3242
11	12007722	ADHESIVO 2010 FAGOR M	ADHESIVE 2010 FAGOR M	1	1	1	1	1	1	1	1	1			M MODELS
11	12007741	ADHESIVO CP FAGOR	PC ADHESIVE FAGOR	1	1	1	1	1	1	1	1	1			MA MODELS
22	12024197	CONTROL TARJETA M	CONTROL PLATE M	1	1	1	1	1	1	1	1	1			C-3242
7	12024920	TRANSFORMADOR	TRANSFORMER	1	1	1	1	1	1	1	1	1			C-3242
1	12103360	REP. VARIADOR LN -10	REP. VARIATOR LN-10	1	1	1									C-3242
1	12103498	REP. VARIADOR LN -13	REP. VARIATOR LN-13				1	1	1						C-3242
1	12103585	REP. VARIADOR LN -18	REP. VARIATOR LN-18							1	1	1			C-3242
8	12023706	RELE 230V AC 50/60Hz 16A 2vía	RELAY 230V AC 50/60Hz 16A 2V	1	1	1	1	1	1	1	1	1			C-3242
3	12024858	SECCIONADOR	CIRCUIT BREAKER	1	1	1		1	1		1	1			C-3242
3	12024628	SECCIONADOR	CIRCUIT BREAKER				1			1					C-3242
8	12024816	RESISTENCIA LF-8	RESISTANCE LF-8	3	1										C-3237
8	12023247	RESISTENCIA LF-13	RESISTANCE LF-13				3	1							C-3237
8	12023242	RESISTENCIA LF-18	RESISTANCE LF-18							3	1				C-3237

MOD.	LAVADORAS / WASHING MACHINES	ZONA / ZONE	RECOMENDADOS / RECOMMENDED	PLANO DIAGRAM	

ITEM	CODIGO REFERENCE	DENOMINACION	DENOMINATION	LN-10 / 11 E	LN-10/11 AC	LN-10 / 11 V	LN-13 E	LN-13 AC	LN-13 V	LN-18 E	LN-18 AC	LN-18 V	ELIMINADO ELIMINATED	INTRODUCID. INTRODUCED	NOTAS
2	12103706	REP. PLC PROGRAMADA LN 10	PLC PROGRAMMED LN-10	1	1	1									C-3242
2	12103709	REP. PLC PROGRAMADA LN 13	PLC PROGRAMMED LN-13				1	1	1						C-3242
2	12103821	REP. PLC PROGRAMADA LN 18	PLC PROGRAMMED LN-18							1	1	1			C-3242
29	12023340	VALVULA VAPOR 1/2 50/60HZ				1			1			1			C-3247

MOD.	LAVADORAS / WASHING MACHINES	ZONA / ZONE	RECOMENDADOS / RECOMMENDED	PLANO DIAGRAM	

ITEM	CODIGO REFERENCE	DENOMINACION	DENOMINATION	LN-25 E	LN-25 AC	LN-25 V	LN-35 E	LN-35 AC	LN-35 V				ELIMINADO ELIMINATED	INTRODUCID. INTRODUCED	NOTAS
1	12047170	MOTOR 230V AC 3 50Hz 2,2KW	ENGINE 230V AC 3 50Hz 2,2KW	1	1	1									C-3240
1	12046367	MOTOR 230V AC 3 50Hz 3KW	ENGINE 230V AC 3 50Hz 3KW				1	1	1						C-3240
6	12047172	CORREA POLY-V 12PJ1956 LN25	BELT POLY-V 12PJ1956 (LN-25)	1	1	1									C-3240
6	12046375	CORREA POLY-V 12PJ1992 LN35	BELT POLY-V 12PJ1992 (LN-35)				1	1	1						C-3240
16	12038446	REP. CIERRE FAGOR 13,18,25	COMPLETE LOCK FAGOR	1	1	1									C-3239
16	12110579	REP. CIERRE FAGOR 35	COMPLETE LOCK FAGOR				1	1	1						C-3239
	12025061	CABLE. PTC+PUENTE RECTIFIC.	PTC + WIRING BRIDGE-RECTIF.	1	1	1	1	1	1						VARIOS
3	12024404	VALVULA VACIADO	DRAINAGE VALVE	1	1	1	1	1	1						C-3241
29	12025161	ELECTROVALVULA SIMPLE	SIMPLE SOLENOID VALVE	1	1	1	1	1	1						C-3242
30	12023921	ELECTROVALVULA 3 VIAS	3 WAY SOLENOID VALVE	1	1	1	1	1	1						C-3242
24	12024634	INTERRUPTOR GENERAL	POWER SWITCH	1	1	1	1	1	1						C-3242
9	12041014	CONTACTOR CALENTAMIENTO	HEATING CONTACTOR	2			2								C-3242
9	12024040	CONTACTOR CALENTAMIENTO	HEATING CONTACTOR		1	1		1	1						C-3242
10	12023814	SONDA FUNCIONAMIENTO	WORKING THERMOSTAT	1	1	1	1	1	1						C-3237
S/Nº	12024333	CARTUCHO FUSIBLE A4	FUSE 4A	2	2	2	2	2	2						C-3242
23	12024780	VISUALIZADOR M	VIEWER M	1	1	1	1	1	1						C-3242
11	12007722	ADHESIVO 2010 FAGOR M	ADHESIVE 2010 FAGOR M	1	1	1	1	1	1						M MODELS
11	12007741	ADHESIVO CP FAGOR	PC ADHESIVE FAGOR	1	1	1	1	1	1						MA MODELS
22	12024197	CONTROL TARJETA M	CONTROL PLATE M	1	1	1	1	1	1						C-3242
7	12024920	TRANSFORMADOR	TRANSFORMER	1	1	1	1	1	1						C-3242
1	12103846	REP. VARIADOR LN -25	REP. VARIATOR LN-25	1	1	1									C-3242
1	12103886	REP. VARIADOR LN -35	REP. VARIATOR LN-35				1	1	1						C-3242
3	12024628	SECCIONADOR	CIRCUIT BREAKER	1			1								C-3242
3	12024858	SECCIONADOR	CIRCUIT BREAKER		1	1		1	1						C-3242
8	12041359	RESISTENCIA LN-25	RESISTANCE LN-25	3	1										C-3237
8	12092855	RESISTENCIA LN-35	RESISTANCE LN-35				3	1							C-3237
2	12103847	REP. PLC PROGRAMADA LN 25	PLC PROGRAMMED LN-25	1	1	1									C-3242
2	12103889	REP. PLC PROGRAMADA LN 35	PLC PROGRAMMED LN-35				1	1	1						C-3242
29	12024331	VALVULA VAPOR 3/4" 60HZ.				1			1						C-3237

LAVAD/E - 10,13,18 MPP, M

LAVAD/V - 10,13,18 MPP, M

LAVAD/AC - 10,13,18 MPP, M

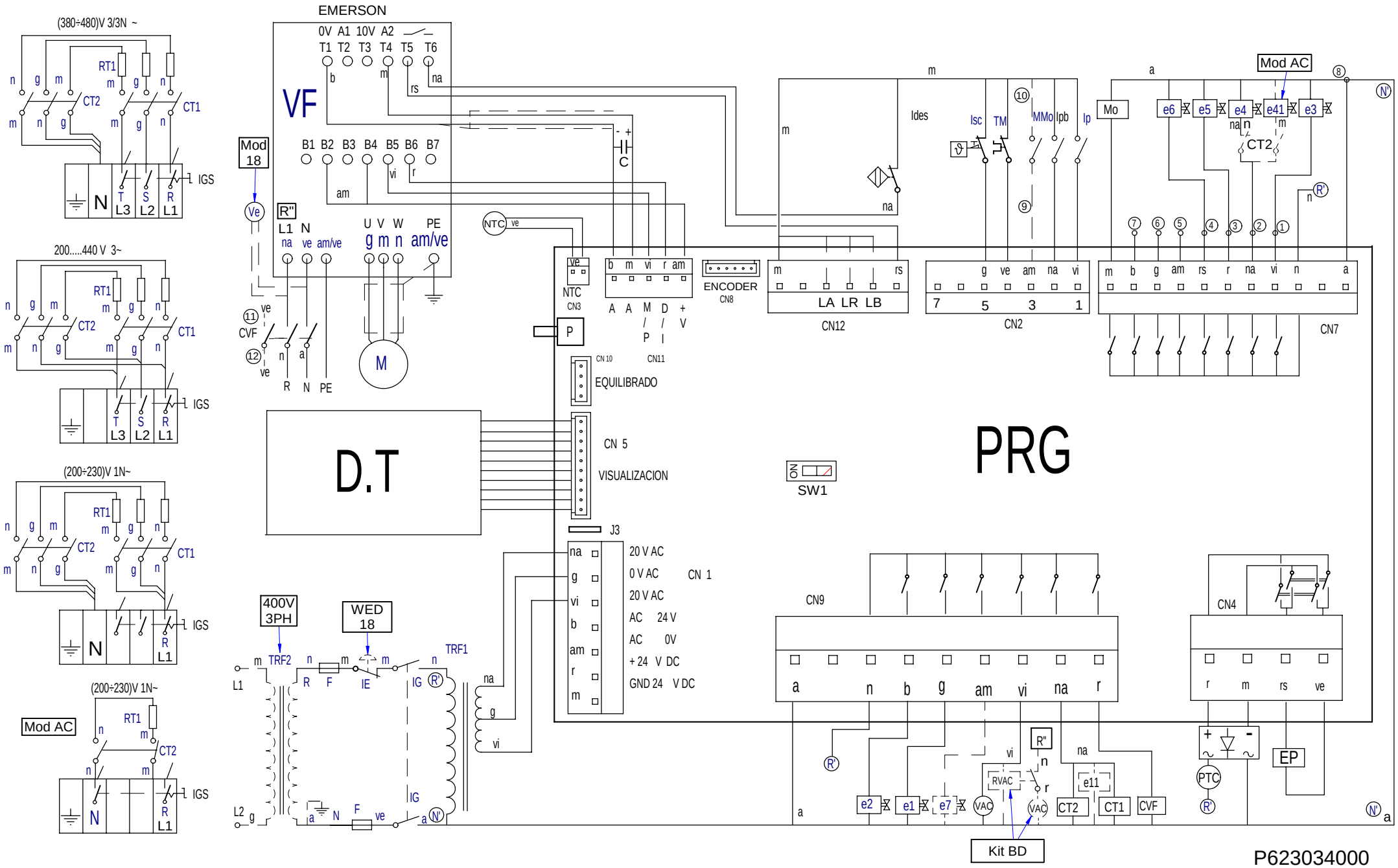

Simb / LENG	ESPAÑOL	FRANÇAIS	ENGLISH	DEUTSCH	ITALIANO
CT =	Contactor Calentamiento	Contacteur Chauffe	Heating Contactor	Heizschütz	Contatore Riscaldamento
DP =	Detector posición.	Détecteur position	Position detector	Stellung Taster	Rilevatore posizione
DS1	Dosificador Neutralizante.	Doseur Neutralisant	Neutralizer feeder	Dosiervorrichtung Neutralspülmittel	Dosatore Neutralizzante
DS2	Dosificador jabon liquido.	Doseur lessive liquide	Liquid soap feeder	Dosiervorrichtung Flüssigseife	Dosatore sapone liquido
DS3	Dosificador aditivos.	Doseur additifs	Additive feeder	Dosiervorrichtung Zusatzmittel	Dosatore additivi
D.T.	Display/Teclado	Écran/Clavier	Display/Keyboard	Display/Tastatur	Display/Tastiera
e1 =	Electro válvula agua Fria.	Électrovanne eau Froide	Cold water electrically operated valve	Elektroventil Kaltwasser	Elettrovalvola acqua Fredda
e2 =	Electro válvula agua Caliente	Électrovanne eau Chaude	Hot water electrically operated valve	Elektroventil Warmwasser	Elettrovalvola acqua Calda
e3 =	Electro válvula Prelavado.	Électrovanne Prélavage	Pre-wash electrically operated valve	Elektroventil Vorwaschen	Elettrovalvola Prelavaggio
e4 =	Electro válvula Lavado.	Électrovanne Lavage	Wash electrically operated valve	Elektroventil Hauptwaschgang	Elettrovalvola Lavaggio
e5 =	Electro válvula Lejía.	Électrovanne Eau de Javel	Bleach electrically operated valve.	Elektroventil Bleiche	Elettrovalvola Candeggina
e6 =	Electro válvula Suavizante.	Électrovanne Assouplissant	Fabric softener electrically operated valve	Elektroventil Weichspüler	Elettrovalvola Ammorbidente
e7 =	Electro válvula agua Descalcificada	Électrovanne eau Adoucie	Delimed water electrically operated valve	Elektroventil entkalktes Wasser	Elettrovalvola acqua Decalcificata
e8 ,9,10 =	Electro válvula Equilibrado	Électrovanne Équilibrage	Balancer electrically operated valve	Elektroventil Gleichgewicht	Elettrovalvola Bilanciamento
e11 =	Electro válvula Vapor.	Électrovanne Vapeur	Steam electrically operated valve	Elektroventil Dampf	Equilibrado Vapore
EP =	Electroimán de Puerta.	Électro-aimant de Porte	Door electric magnet	Elektromagnet Gerätetür	Elettromagnete Porta
FI =	Filtro de Interferencias.	Filtre Anti-parasites	Interference filter	Störungsfilter	Filtro Interferenze
F =	Fusible.	Fusible	Fuse	Sicherung	Fusibile
G1,G2 =	Galga Sensor.	Jauge Capteur	Sensing gage	Meßsensor	Calibro Sensore
IE =	Pulsador Parada de emergencia.	Bouton-poussoir Arrêt d'urgence	Emergency stop push button	Not-Aus-Taster	Pulsante Arresto di emergenza
IG =	Interruptor general.	Interrupteur général	General switch	Hauptschalter	Interruttore generale
IGS =	Interruptor General de seguridad.	interrupteur Général de sécurité	General safety switch	Sicherheitshauptschalter	Interruttore Generale di sicurezza
Ides =	Interruptor de desequilibrio.	Interrupteur de balourd	Unbalance switch	Ungleichgewichtsschalter	Interruttore di squilibrio
IMo =	Interruptor Monedero.	Interrupteur Monnayeur	Coin slote switch	Münzschalter	Interruttore Portamonete
Ip =	Interruptor puerta Cerrada.	Interrupteur porte Fermée	Closed door switch	Schalter Tür geschlossen	Interruttore porta Chiusa
Ipb =	Interruptor puerta bloqueada.	Interrupteur porte verrouillée	Door lock switch	Schalter Tür verriegelt	Interruttore porta bloccata
Isc	Interruptor seguridad Temperatura	Thermostat Limiteur	Hi-limit Thermostat	Grenzthermostat	Termostato Limitatore
M =	Motor.	Moteur	Motor	Motor	Motore
Mo =	Monedero.	Monnayeur	Coin slot	Münzvorrichtung	Portamonete
NTC =	Sensor temperatura..	Capteur température	Temperature sensor	Temperatursensor	Sensore temperatura
RT =	Resistencia Calentamiento.	Résistance Chauffe	Heating Resistors	Widerstand Aufheizung	Resistenza Riscaldamento
Tm =	Térmico de Motor.	Thermique du Moteur	Motor hot-wire	Motorwärmeschalter	Termico del Motore
Trf =	Transformador	Transformateur	Transformer	Transformator	Trasformatore
Trf s/N =	Transformador Versión sin Neutro.	Transformateur Version sans Neutre	Transformer Version without Neutral	Transformator Modell ohne Neutralstellung	Trasformatore Versione senza Neutro
VAC =	Válvula Vaciado	Vanne Vidange	Emptying valve	Ablassventil	Valvola Scarico
Ve =	Ventilador.	Ventilateur	Fan	Ventilator	Ventola
VF =	Convertidor de Frecuencia.	Convertisseur de Fréquence	Frequency converter	Frequenzumwandler	Convertitore di Frequenza
VM =	Ventilador Motor.	Ventilateur Moteur	Fan motor	Ventilator Motor	Ventola Motore
1...8 =	Puntos conexión dosificadores.	Points raccordement doseurs	Feeder connection points	Anschlussstellen Dosiervorrichtungen	Punti connessione dosatori
COLOR	**COLORES**	**COULEURS**	**COLOUR**	**FARBEN**	**COLORE**
a =	Azul	Bleu	Blue	Blau	Blu
am =	Amarillo	Jaune	Yellow	Gelb	Giallo
am/ve =	Amarillo/verde	Jaune / vert	Yellow / green	Gelb/grün	Giallo/verde
b =	Blanco	Blanc	White	Weiß	Bianco
g =	Gris	Gris	Grey	Grau	Grigio
m =	Marrón	Marron	Brown	Braun	Marrone
n =	Negro	Noir	Black	Schwarz	Nero
na =	Naranja	Orange	Orange	Orange	Arancio
r =	Rojo	Rouge	Red	Rot	Rosso
rs =	Rosa	Rose	Pink	Rosa	Roseo
ve =	Verde	Vert	Green	Grün	Verde
vi =	Violeta	Violet	Purple	Violett	Viola

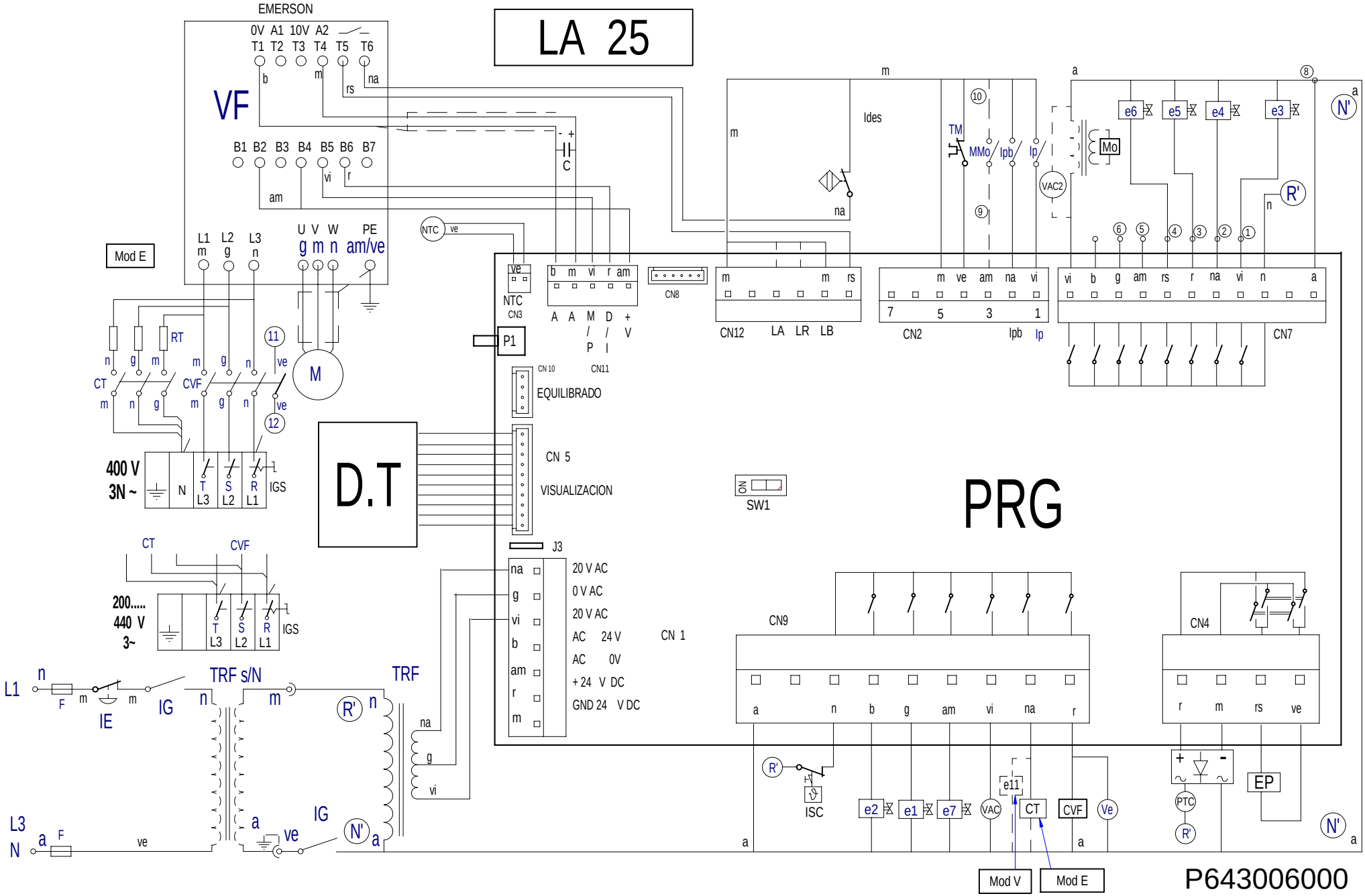
LA 25
EMERSON
VF
0V A1 10V A2
T1 T2 T3 T4 T5 T6
B1 B2 B3 B4 B5 B6 B7
L1 L2 L3
U V W PE
Mod E
RT
CT
CVF
M
400 V
3N ~
IGS
D.T
CN 5
VISUALIZACION
EQUILIBRADO
P1
NTC
CN3
CN8
CN12
CN2
CN7
SW1
PRG
J3
20 V AC
0 V AC
20 V AC
AC 24 V
AC 0V
+ 24 V DC
GND 24 V DC
CN 1
CN9
CN4
200.....
440 V
3~
L1
L3
N
TRF s/N
TRF
IE
IG
F
ISC
EP
PTC
Mod V
Mod E
P643006000

Simb / LENG	ESPAÑOL	FRANÇAIS	ENGLISH	DEUTSCH	ITALIANO
CT =	Contactor Calentamiento	Contacteur Chauffe	Heating Contactor	Heizschütz	Contatore Riscaldamento
DP =	Detector posición.	Détecteur position	Position detector	Stellung Taster	Rilevatore posizione
DS1	Dosificador Neutralizante.	Doseur Neutralisant	Neutralizer feeder	Dosiervorrichtung Neutralspülmittel	Dosatore Neutralizzante
DS2	Dosificador jabon liquido.	Doseur lessive liquide	Liquid soap feeder	Dosiervorrichtung Flüssigseife	Dosatore sapone liquido
DS3	Dosificador aditivos.	Doseur additifs	Additive feeder	Dosiervorrichtung Zusatzmittel	Dosatore additivi
D.T.	Display/Teclado	Écran/Clavier	Display/Keyboard	Display/Tastatur	Display/Tastiera
e1 =	Electro válvula agua Fria.	Électrovanne eau Froide	Cold water electrically operated valve	Elektroventil Kaltwasser	Elettrovalvola acqua Fredda
e2 =	Electro válvula agua Caliente	Électrovanne eau Chaude	Hot water electrically operated valve	Elektroventil Warmwasser	Elettrovalvola acqua Calda
e3 =	Electro válvula Prelavado.	Électrovanne Prélavage	Pre-wash electrically operated valve	Elektroventil Vorwaschen	Elettrovalvola Prelavaggio
e4 =	Electro válvula Lavado.	Électrovanne Lavage	Wash electrically operated valve	Elektroventil Hauptwaschgang	Elettrovalvola Lavaggio
e5 =	Electro válvula Lejía.	Électrovanne Eau de Javel	Bleach electrically operated valve.	Elektroventil Bleiche	Elettrovalvola Candeggina
e6 =	Electro válvula Suavizante.	Électrovanne Assouplissant	Fabric softener electrically operated valve	Elektroventil Weichspüler	Elettrovalvola Ammorbidente
e7 =	Electro válvula agua Descalcificada	Électrovanne eau Adoucie	Delimed water electrically operated valve	Elektroventil entkalktes Wasser	Elettrovalvola acqua Decalcificata
e8 ,9,10 =	Electro válvula Equilibrado	Électrovanne Équilibrage	Balancer electrically operated valve	Elektroventil Gleichgewicht	Elettrovalvola Bilanciamento
e11 =	Electro válvula Vapor.	Électrovanne Vapeur	Steam electrically operated valve	Elektroventil Dampf	Equilibrado Vapore
EP =	Electroimán de Puerta.	Électro-aimant de Porte	Door electric magnet	Elektromagnet Gerätetür	Elettromagnete Porta
FI =	Filtro de Interferencias.	Filtre Anti-parasites	Interference filter	Störungsfilter	Filtro Interferenze
F =	Fusible.	Fusible	Fuse	Sicherung	Fusibile
G1,G2 =	Galga Sensor.	Jauge Capteur	Sensing gage	Meßsensor	Calibro Sensore
IE =	Pulsador Parada de emergencia.	Bouton-poussoir Arrêt d'urgence	Emergency stop push button	Not-Aus-Taster	Pulsante Arresto di emergenza
IG =	Interruptor general.	Interrupteur général	General switch	Hauptschalter	Interruttore generale
IGS =	Interruptor General de seguridad.	interrupteur Général de sécurité	General safety switch	Sicherheitshauptschalter	Interruttore Generale di sicurezza
Ides =	Interruptor de desequilibrio.	Interrupteur de balourd	Unbalance switch	Ungleichgewichtsschalter	Interruttore di squilibrio
IMo =	Interruptor Monedero.	Interrupteur Monnayeur	Coin slote switch	Münzschalter	Interruttore Portamonete
Ip =	Interruptor puerta Cerrada.	Interrupteur porte Fermée	Closed door switch	Schalter Tür geschlossen	Interruttore porta Chiusa
Ipb =	Interruptor puerta bloqueada.	Interrupteur porte verrouillée	Door lock switch	Schalter Tür verriegelt	Interruttore porta bloccata
Isc	Interruptor seguridad Temperatura	Thermostat Limiteur	Hi-limit Thermostat	Grenzthermostat	Termostato Limitatore
M =	Motor.	Moteur	Motor	Motor	Motore
Mo =	Monedero.	Monnayeur	Coin slot	Münzvorrichtung	Portamonete
NTC =	Sensor temperatura..	Capteur température	Temperature sensor	Temperatursensor	Sensore temperatura
RT =	Resistencia Calentamiento.	Résistance Chauffe	Heating Resistors	Widerstand Aufheizung	Resistenza Riscaldamento
Tm =	Térmico de Motor.	Thermique du Moteur	Motor hot-wire	Motorwärmeschalter	Termico del Motore
Trf =	Transformador	Transformateur	Transformer	Transformator	Trasformatore
Trf s/N =	Transformador Versión sin Neutro.	Transformateur Version sans Neutre	Transformer Version without Neutral	Transformator Modell ohne Neutralstellung	Trasformatore Versione senza Neutro
VAC =	Válvula Vaciado	Vanne Vidange	Emptying valve	Ablassventil	Valvola Scarico
Ve =	Ventilador.	Ventilateur	Fan	Ventilator	Ventola
VF =	Convertidor de Frecuencia.	Convertisseur de Fréquence	Frequency converter	Frequenzumwandler	Convertitore di Frequenza
VM =	Ventilador Motor.	Ventilateur Moteur	Fan motor	Ventilator Motor	Ventola Motore
1...8 =	Puntos conexión dosificadores.	Points raccordement doseurs	Feeder connection points	Anschlussstellen Dosiervorrichtungen	Punti connessione dosatori
COLOR	**COLORES**	**COULEURS**	**COLOUR**	**FARBEN**	**COLORE**
a =	Azul	Bleu	Blue	Blau	Blu
am =	Amarillo	Jaune	Yellow	Gelb	Giallo
am/ve =	Amarillo/verde	Jaune / vert	Yellow / green	Gelb/grün	Giallo/verde
b =	Blanco	Blanc	White	Weiß	Bianco
g =	Gris	Gris	Grey	Grau	Grigio
m =	Marrón	Marron	Brown	Braun	Marrone
n =	Negro	Noir	Black	Schwarz	Nero
na =	Naranja	Orange	Orange	Orange	Arancio
r =	Rojo	Rouge	Red	Rot	Rosso
rs =	Rosa	Rose	Pink	Rosa	Roseo
ve =	Verde	Vert	Green	Grün	Verde
vi =	Violeta	Violet	Purple	Violett	Viola