MODELOS / *MODELS*

CO-400 W
CO-402 W

LAVAVASOS
GLASSWASHERS

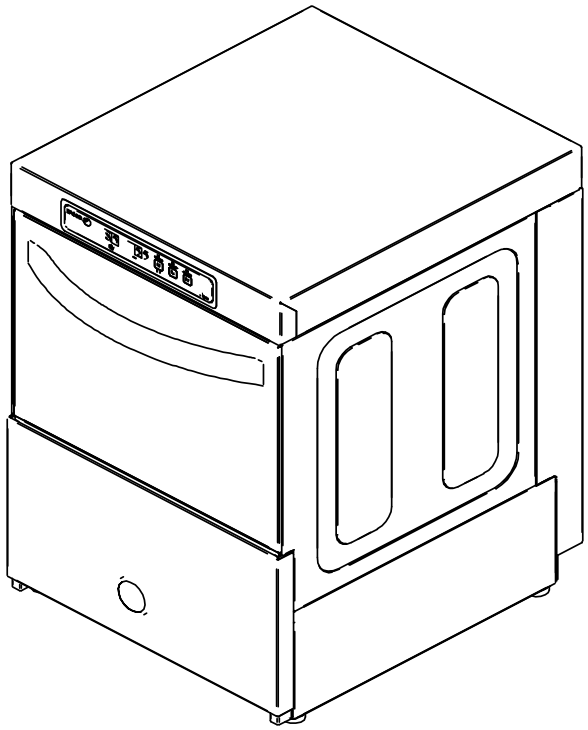

ENERO 2021 *JANUARY*
rev 112021

Despiece técnico CO-400_402 W /
Spare Parts CO-400_402 W

FAGOR

19073543	CO-400 W B DD CA 220-240V 1 60Hz
19073544	CO-402W B DD CA 220-240V 1 60Hz

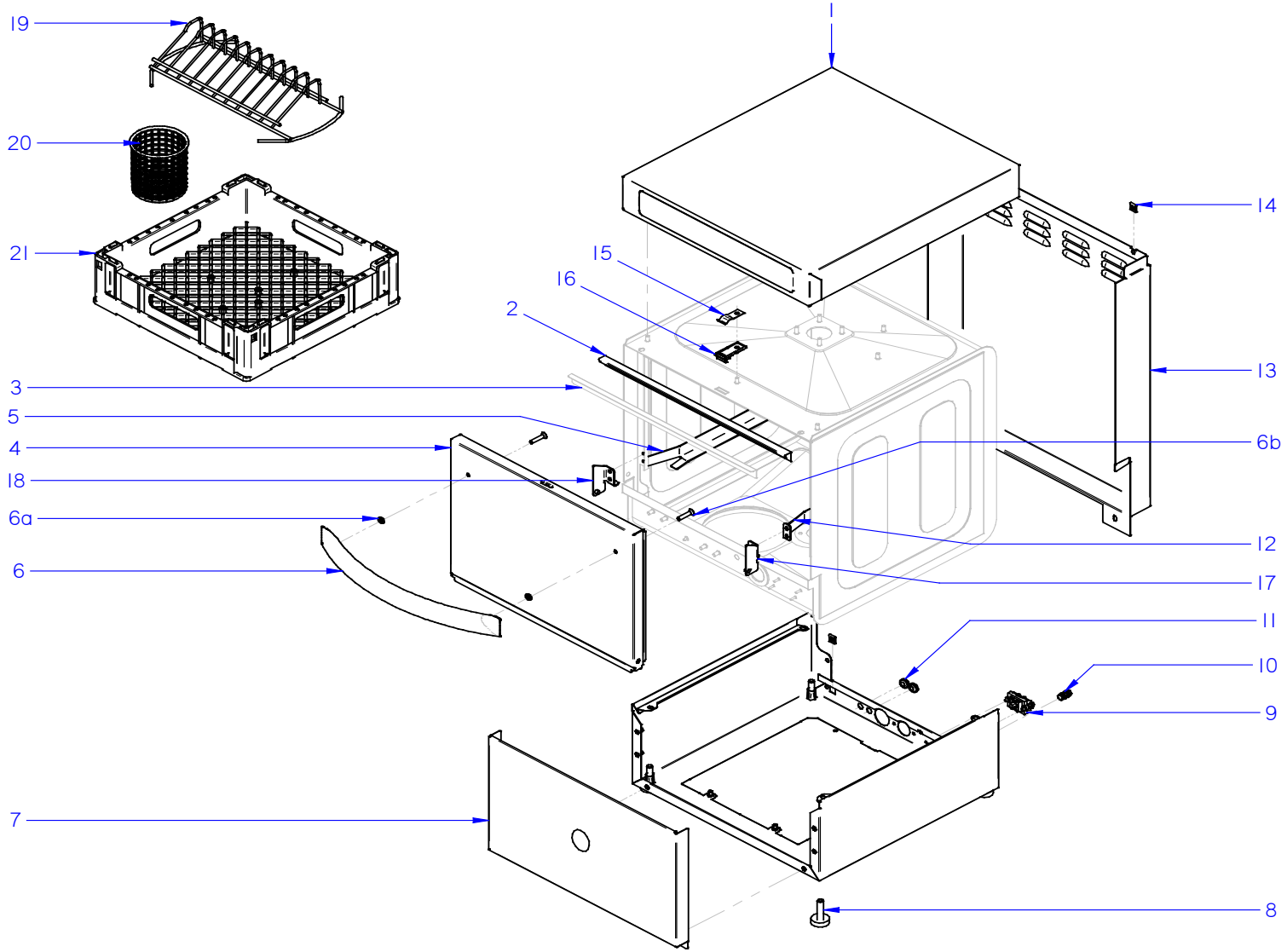
19
20
21
3
5
4
18
6a
6
7
1
14
15
16
2
13
6b
12
17
11
10
9
8

APARATO / APPLIANCE	LAVAVAJILLAS / DISHWASHER	ZONA / ZONE	A - MUEBLE / UNIT

ITEM	CODIGO REFERENCE	DENOMINACIÓN	DENOMINATION	CO-400 W	CO-402 W											RECOMENDADOS RECOMMENDED	HASTA UNTIL	DESDE SINCE	NOTAS / NOTES
1	12271455	TAPA PORTAMANDOS 400 W	400 W CONTROL HOLDER TOP	1	-														
1	12247359	TAPA PORTAMANDOS 402_404	402_404CONTROL HOLDER TOP	-	1														
2	12101867	PERFIL VAHOS 40X	STEAM SEAL 40X	1	1														
3	12102035	PERFIL JUNTA VAHOS 40X	STEAM PROFILE SEAL 40X	1	1														
4	12281757	PUERTA 40X	40X DOOR	1	1														ASA NO INCLUIDA / HANDLE NOT INCLUDED
5	12102193	GUIA CESTILLO IZQU 40X	LEFT BASKET GUIDE 40X	1	1														
6	12049468	ASA LAVAVASOS	GLASSWASHER HANDLE	1	1														
6a	12009912	JUNTA TÓRICA	O-RING	2	2														
6b	12115204	TORN. M6x30	M6x30 SCREW	2	2														
7	12119828	PANEL FRONTAL CO-40X W	FRONT PANEL CO-40X W	1	1														
8	12024163	PATA REGULABLE	REGULABLE FOOT	4	4														
9	12024230	RETENEDOR DE CABLE	WIRE RETAINER	1	1														
10	12102202	CONEXIÓN EQUIPOTENCIAL	EQUIPOTENTIAL BONDING	1	1														
11	12112707	PASAMUROS 18x8x6	1MM SHEET BUSHING 18x8x6	2	2														
12	12102194	GUIA CESTILLO DCHA 40X	RIGHT BASKET GUIDE 40X	1	1														
13	12101871	PANEL POSTERIOR 40X	REAR PANEL 40X	1	1														
14	12087215	TUERCA RÁPIDA M5	FAST NUT M5	4	4														
15	12087186	FLEJE_CIERRE_PUERTA	DOOR LOCK SPRING	1	1														
16	12087183	MACHO CIERRE PUERTA	DOOR LOCK	1	1														
17	12277345	BISAGRA DERECHA	RIGHT HINGE	1	1														
18	12277344	BISAGRA IZQUIERDA	LEFT HINGE	1	1														
19	12025030	SUPLEMENTO PLATILLOS 40X	SMALL DISHES SUPPLEMENT 40X	1	1														
20	12025242	CESTILLO PORTACUBIERTOS	CUTLERY BASKET	1	1														
21	12025069	CESTILLO 40X	BASKET 40X	2	2														

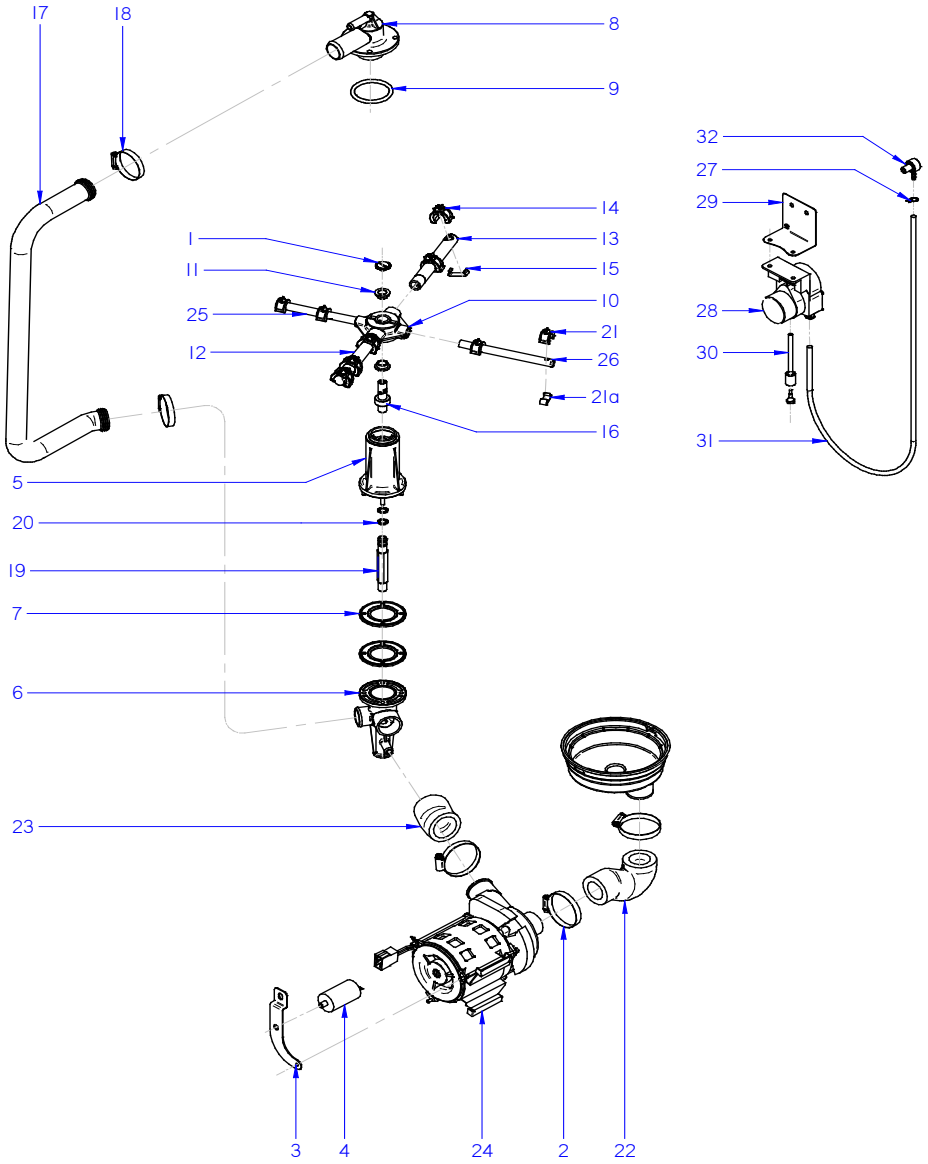
17
18
8
9
32
27
29
14
1
13
11
15
25
10
28
21
12
26
30
21a
16
31
5
20
19
7
6
23
3
4
24
2
22

APARATO / APPLIANCE	LAVAVAJILLAS / DISHWASHER	ZONA / ZONE	B - LAVADO / WASHING

ITEM	CODIGO REFERENCE	DENOMINACIÓN	DENOMINATION	CO-400 W	CO-402 W											RECOMENDADOS RECOMMENDED	HASTA UNTIL	DESDE SINCE	NOTAS / NOTES
1	12009829	TORNILLO ESPECIAL M.5X0.8	SPECIAL SCREW M.5X0.8	2	2														
2	12009962	ABRAZADERA 40-60	40-60 CLAMP	4	4														
3	12111106	SOPORTE BOMBA LAVADO 400	WASHIG PUMP SUPPORT 400	1	1														
4	12024346	CONDENSADOR 10MF	10MF CAPACITOR	1	1														
5	12112971	SOP. DISTRIBUIDOR INFERIOR	LOWER SPRY-ARM SUPPORT	1	1														
6	12024703	PASAMUROS CESTO CUADRADO	SQUARE BASKET BUSHING	1	1														
7	12023533	JUNTA ESTANQUEIDAD	SEALING GASKET	2	2														
8	12113028	SOP. DISTRIBUIDOR SUPERIOR	UPPER SPRY-ARM SUPPORT	1	1														
9	12010079	JUNTA TOR.50.17X60.83X5.3	O-RING 50.17X60.83X5.3	1	1														
10	12025216	CRUCETA	CROSSBRACE	2	2														
11	12024086	CASQUILLO CRUCETA	CROSSBRACE BUSHING	4	4														
12	12022381	RAMA LAVADO A 400	WASHING BRANCH A 400	2	2														
13	12022382	RAMA LAVADO B 400	WASHING BRANCH A 400	2	2														
14	12023732	TOBERA LAVADO	WASHING NOZZLE	12	12														
15	12023710	ENGANCHE TOBERA LAVADO	WASHING NOZZLE ENGAGE	12	12														
16	12025114	EJE	SHAFT	2	2														
17	12025154	ARBOL LAVADO 400	WASHING TREE 400	1	1														
18	12009986	ABRAZADERA 32-50L	32-50L CLAMP	2	2														
19	12023801	EMPALME ACLARADO	RINSE CONNECTION	1	1														
20	12009911	JUNTA TO.10.82X14.38X1.78	O-RING 10.82X14.38X1.78	2	2														
21	12024077	TOBERA ACLARADO	RINSING NOZZLE	10	10														
21a	12024006	ENGANCHE TOBERA ACLARADO	RINSING NOZZLE ENGAGE	10	10														
22	12023670	CODO ASPIRACION	SUCTION ELBOW	1	1														
23	12023607	CODO IMPULSION	EXPULSIOIN ELBOW	1	1														
24	12259844	BOMBA LAVADO 60HZ 260KW	WASHING PUMP 60HZ 260KW	1	1											X			
25	12023526	RAMA ACLARADO A 400	RINSING BRANCH A 400	2	2														
26	12023525	RAMA ACLARADO B 400	RINSING BRANCH B 400	2	2														
27	12023707	BRIDA ELASTICA TUBO	ELASTIC CLAMP FOR PIPES	1	1														
28	12133011	DOSIFICADOR DETERGENTE PERIST.	DETERGENT PERIST. DISPENSER	1	1														
29	12046465	SOPORT. DOSIFICADORES 400	DISPENSERS SUPPORT 400	1	1														
30	12265549	CONDUCTO DETERGENTE	DETERGENT PIPE	1	1														
31	11000079	CONDUCTO DOSIF. TRANSP 6X4	DISPENSER TRANSPARENT PIPE	0,5	0,5														(METROS - METRES) / DD MODELS
32	12024531	INYECTOR DETERGENTE	DETERGENT INJECTOR	1	1														

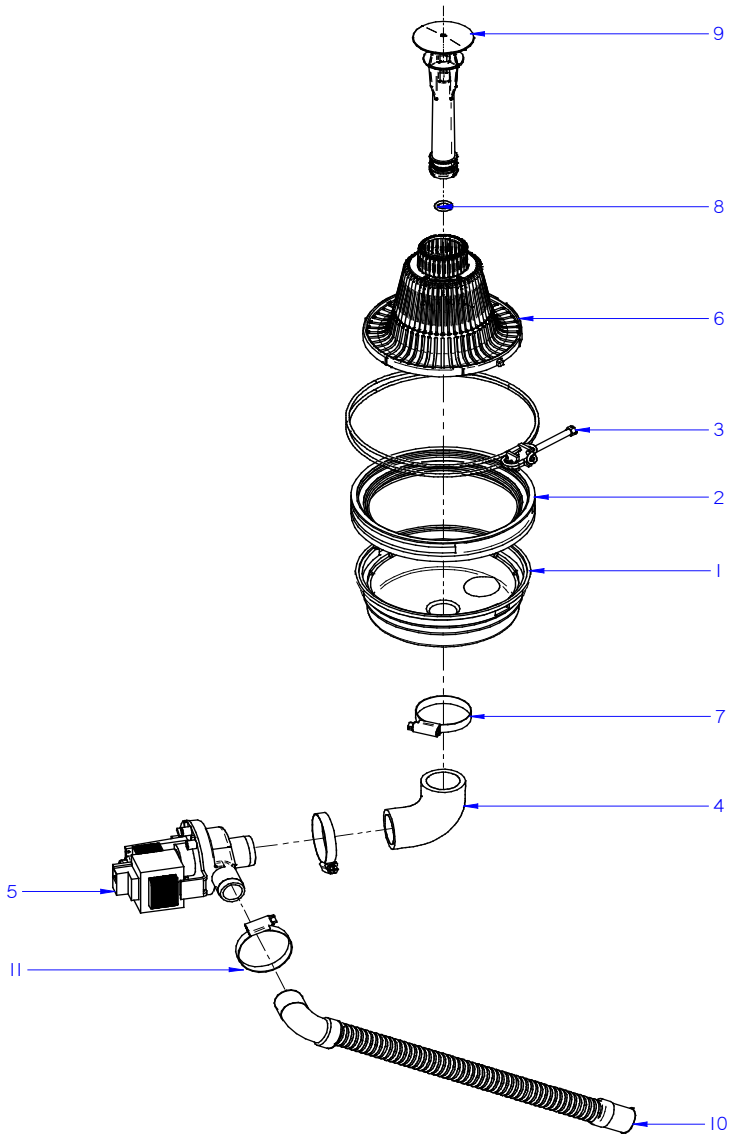
9
8
6
3
2
1
7
4
5
11
10

APARATO / APPLIANCE	LAVAVAJILLAS / DISHWASHER	ZONA / ZONE	DESAGÜE BOMBA / DRAIN PUMP

ITEM	CODIGO REFERENCE	DENOMINACIÓN	DENOMINATION	CO-400 W	CO-402 W											RECOMENDADOS RECOMMENDED	HASTA UNTIL	DESDE SINCE	NOTAS / NOTES
1	12112942	CUBETA	PAIL	1	1														
2	12024113	JUNTA CUBETA	PAIL SEAL	1	1														
3	12025195	ABRAZADERA CUBETA COMPLET	PAIL COMPLETE CLAMP	1	1														
4	12094016	CONDUCTO ASPIRACION	SUCTION PIPE	1	1														
5	12094265	BOMBA DESAGÜE 1N 50/60Hz 38W	DRAINING PUMP 1N 50/60Hz 38W	1	1											X			
6	12092003	FILTRO	FILTER	1	1														
7	12009997	ABRAZADERA 25-40	25-40 CLAMP	2	2														
8	12104085	JUNTA TORICA ALIVIADERO	SPILLWAY O-RING	1	1														
9	12133299	ALIVIADERO	SPILLWAY	1	1														
10	12023666	MANGUERA DESAGÜE	DRAINING PIPE	1	1														
11	12010023	ABRAZADERA 20-32	20-32 CLAMP	1	1														

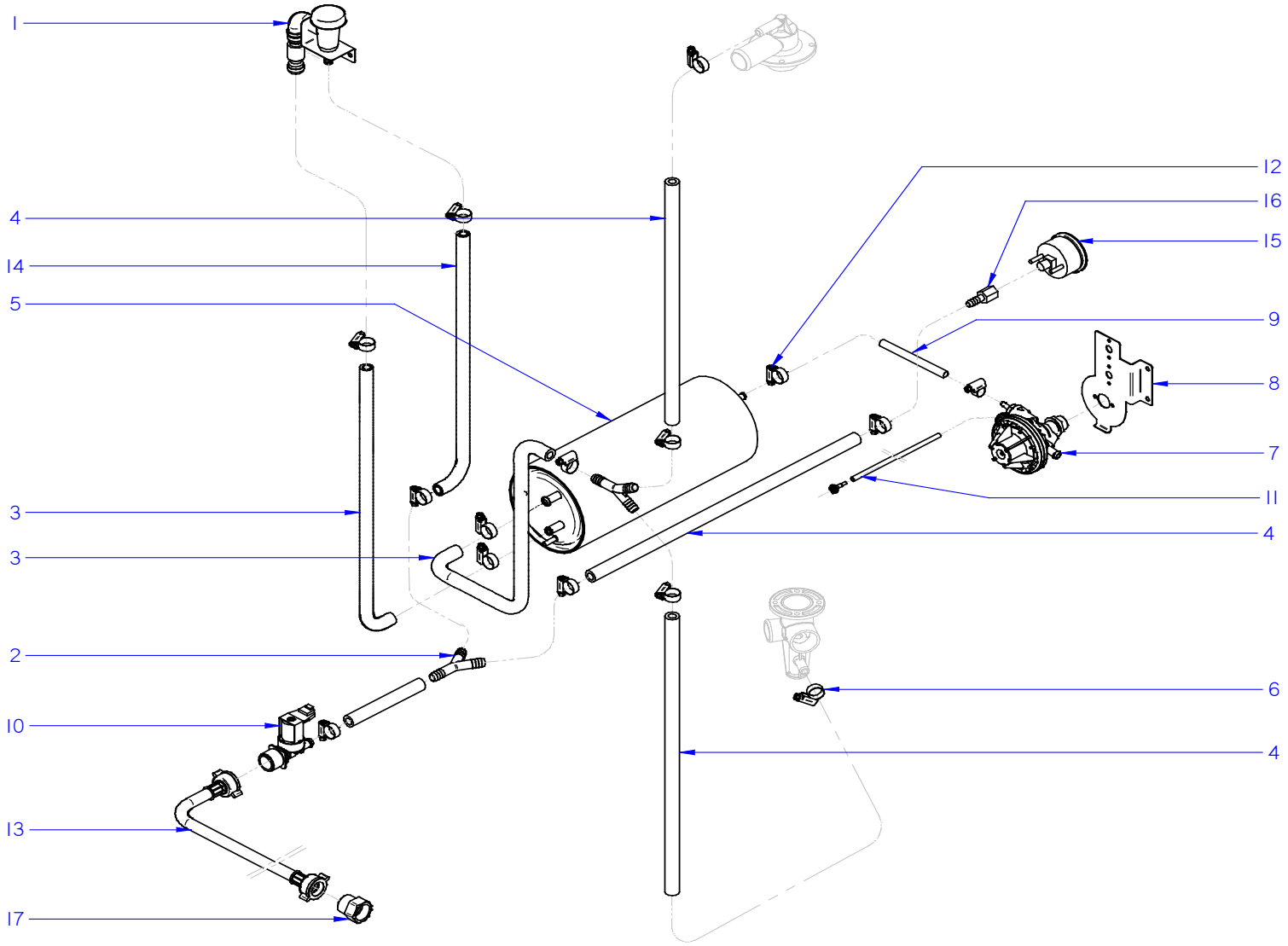
1
4
14
5
3
3
2
10
13
17
12
16
15
9
8
7
11
4
6
4

APARATO / APPLIANCE	LAVAVAJILLAS / DISHWASHER	ZONA / ZONE	ACLARADO / RINSE

ITEM	CODIGO REFERENCE	DENOMINACIÓN	DENOMINATION	CO-400 W	CO-402 W											RECOMENDADOS RECOMMENDED	HASTA UNTIL	DESDE SINCE	NOTAS / NOTES
1	12280049	VALVULA ANTIRRETORNO W	NON-RETURN VALVE W	1	1											X			
2	12023511	RACORD EN Y	Y FITTING	2	2														
3	12245966	CONDUCTO CALDERIN-RACORD	BOILER-FITTING PIPE	2	2														
4	11000083	TUBO GOMA NEGRA D 17x10	BLACK RUBBER PIPE D 17x10	1	1														
5	12049602	CALDERIN	BOILER	1	1														
6	12010036	ABRAZADERA 12-20	12-20 CLAMP	14	14														
7	12133010	DOSIFICADOR ABRILLANTADOR	RINSE-AID DISPENSER	1	1														
8	12132302	SOPORTE TERMOSTATOS	THERMOSTATS SUPPORT	1	1														
9	11002150	TUBO EPDM TRENZADO 6x12	EPDM BRAIDED PIPE 6x12	1	1														
10	12025161	E.V.SIMPLE 220V. 50/60Hz	SIMPLE ELECTROVALVE	1	1											X			
11	12265502	CONDUCTO ABRILLANTADOR	RINSE AID PIPE	1	1														
12	12240495	ABRAZADERA 13-14	CLAMP 13-14	2	2														
13	12025198	MANGUERA ENTRADA AGUA	WATER INLET HOSE	1	1														
14	12245967	CONDUCTO EV-ANTIRRETORNO	EV-NON-RETURN PIPE	1	1														
15	12115146	MANOMETRO	MANOMETER	1	1														
16	12115147	ADATADOR MANOMETRO	MANOMETER ADAPTER	1	1														
17	12023860	ADAPTADOR 3/4	3/4 FITTIING	1	1														

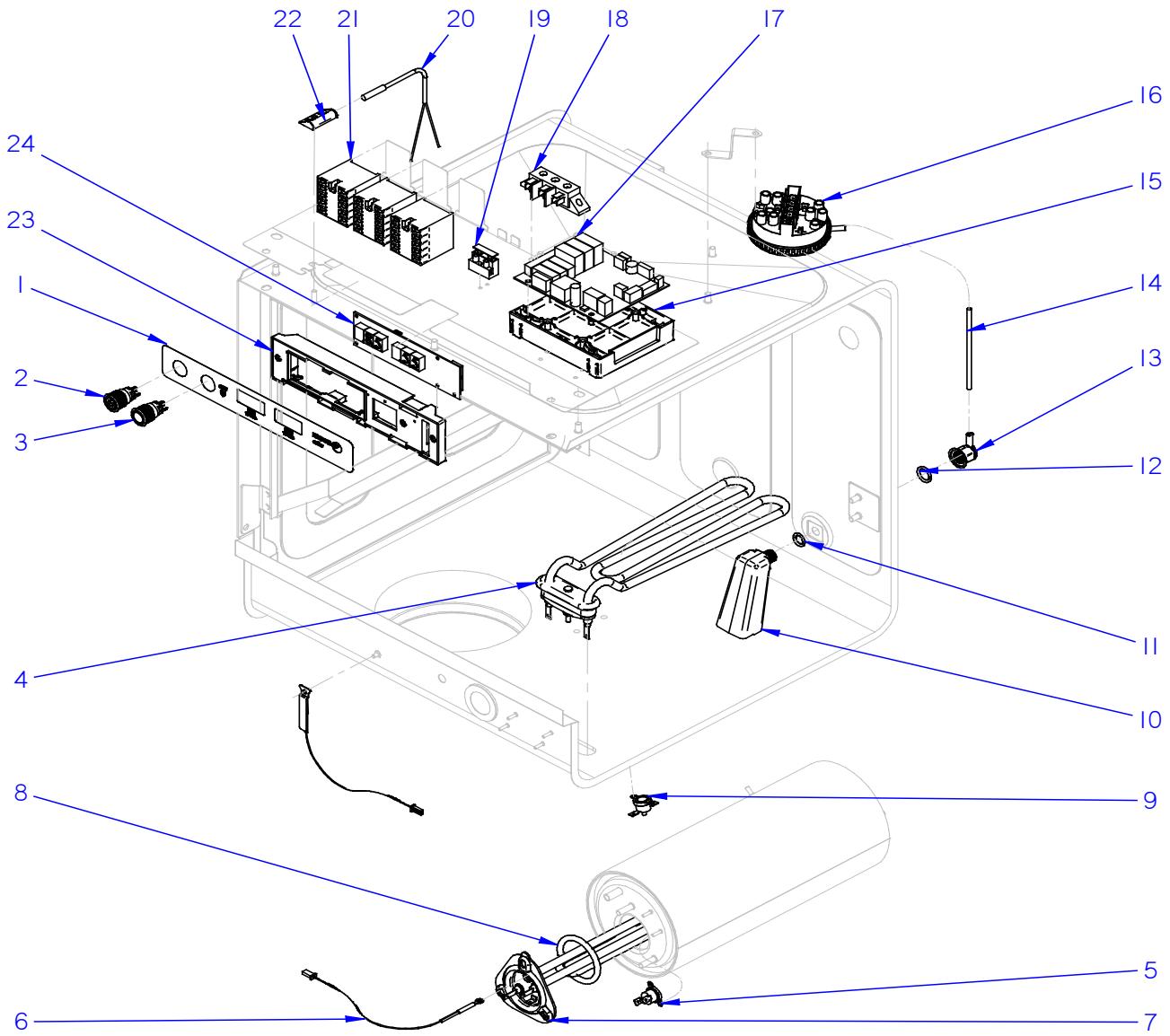
22
21
20
19
18
17
16
15
14
13
12
24
23
1
2
3
4
11
10
9
8
5
6
7

APARATO / APPLIANCE	LAVAVAJILLAS / DISHWASHER	ZONA / ZONE	ELECTRICO / ELECTRIC

ITEM	CODIGO REFERENCE	DENOMINACIÓN	DENOMINATION	CO-400 W												RECOMENDADOS RECOMMENDED	HASTA UNTIL	DESDE SINCE	NOTAS / NOTES
1	12242577	EMBELLECEDOR CO-400_500 W	STICKER CO-400_500 W	1												X			
2	12242881	BOTON DE ENCENDIDO	POWER ON BUTTON	1												X			
3	12241256	BOTON START	START BUTTON	1												X			
4	12090524	RESISTENCIA TANQUE 2 kW	TANK HEATING ELEMENT 2 kW	1												X			
5	12096597	TERMOSTATO DE SEGURIDAD 110 ºC	SAFETY THERMOSTAT 110 ºC	1												X			
6	12025036	SONDA NTC	NTC PROBE	2												X			
7	12093124	RESISTENCIA CALDERIN 2,8 kW	BOILER HEATING ELEMENT 2,8 kW	1												X			PEDIR TAMBIEN LA JUNTA 12102062 / ORDER ALSO THE O-RING 12102062
8	12102062	JUNTA TORICA RESISTENCIA	HEATING ELEMENT O-RING	1												X			
9	12090518	TERMOSTATO DE SEGURIDAD 95 ºC	SAFETY THERMOSTAT 95 ºC	1												X			
10	12136338	CAMARA PRESOSTATO	PRESSURE SWITCH CHAMBER	1															
11	12009873	JUNTA TORICA 16.01X10.77X2.62	O-RING 16.01X10.77X2.62	1															
12	12009837	JUNTA TORICA 13.94x19.18x2.6	O-RING 13.94x19.18x2.6	1															
13	12091147	RACOR PRESOSTATO	PRESSURE SWITCH FITTING	1															
14	11000066	TUBO GOMA NEGRO D 8*4	BLACK RUBBER PIPE D 8*4	1															
15	12232967	SOPORTE TARJETA DE POTENCIA	POWER BOARD SUPPORT	1															
16	12024981	PRESOSTATO TRIPLE	TRIPLE PRESSURE SWITCH	1												X			
17	12232119	TARJETA DE CONTROL 7 RELES	7 RELAY CONTROL BOARD	1												X			
18	12024382	REGLETA 3 VIAS	3 WAY POWER STRIP	1															
19	12045569	BORNA PORTAFUSIBLES	FUSE HOLDER CONNECTOR	1															
20	12024477	INTERRUPTOR MAGNETICO	MAGNETIC SWITCH	1															
21	12024011	CONTACTOR	CONTACTOR	3												X			
22	12024066	AMARRE INTERRUPTOR MAGNETICO	MAGNETIC SWITCH HOLDER	1															
23	12232530	SOPORTE CONTROL	CONTROL SUPPORT	1															
24	12188440	VISUALIZADOR	DISPLAY	1												X			

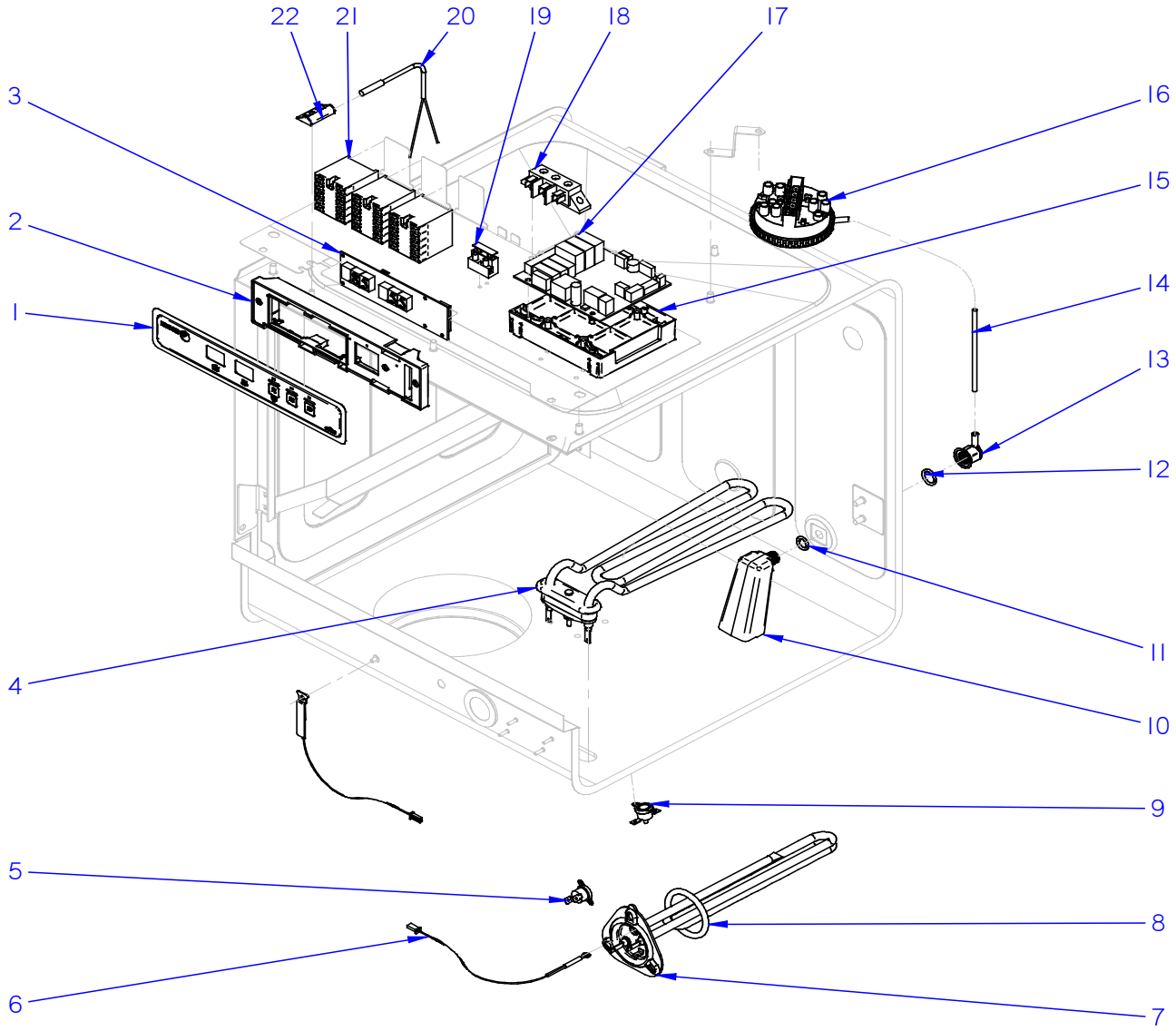
22
21
20
19
18
17
16
15
14
13
12
11
10
9
8
7
6
5
4
3
2
1

APARATO / APPLIANCE	LAVAVAJILLAS / DISHWASHER	ZONA / ZONE	ELECTRICO / ELECTRIC

ITEM	CODIGO REFERENCE	DENOMINACIÓN	DENOMINATION	CO-402 W												RECOMENDADOS RECOMMENDED	HASTA UNTIL	DESDE SINCE	NOTAS / NOTES
1	12241172	EMBELLECEDOR 402_502_504_174 W	STICKER 402_502_504_174 W	1												X			
2	12232530	SOPORTE CONTROL	CONTROL SUPPORT	1															
3	12188440	VISUALIZADOR	DISPLAY	1												X			
4	12090524	RESISTENCIA TANQUE 2 kW	TANK HEATING ELEMENT 2 kW	1												X			
5	12096597	TERMOSTATO DE SEGURIDAD 110 ºC	SAFETY THERMOSTAT 110 ºC	1												X			
6	12025036	SONDA NTC	NTC PROBE	2												X			
7	12093124	RESISTENCIA CALDERIN 2,8 kW	BOILER HEATING ELEMENT 2,8 kW	1												X			PEDIR TAMBIEN LA JUNTA 12102062 / ORDER ALSO THE O-RING 12102062
8	12102062	JUNTA TORICA RESISTENCIA	HEATING ELEMENT O-RING	1												X			
9	12090518	TERMOSTATO DE SEGURIDAD 95 ºC	SAFETY THERMOSTAT 95 ºC	1												X			
10	12136338	CAMARA PRESOSTATO	PRESSURE SWITCH CHAMBER	1															
11	12009873	JUNTA TORICA 16.01X10.77X2.62	O-RING 16.01X10.77X2.62	1															
12	12009837	JUNTA TORICA 13.94x19.18x2.6	O-RING 13.94x19.18x2.6	1															
13	12091147	RACOR PRESOSTATO	PRESSURE SWITCH FITTING	1															
14	11000066	TUBO GOMA NEGRO D 8*4	BLACK RUBBER PIPE D 8*4	1															
15	12232967	SOPORTE TARJETA DE POTENCIA	POWER BOARD SUPPORT	1															
16	12024981	PRESOSTATO TRIPLE	TRIPLE PRESSURE SWITCH	1												X			
17	12232119	TARJETA DE CONTROL 7 RELES	7 RELAY CONTROL BOARD	1												X			
18	12024382	REGLETA 3 VIAS	3 WAY POWER STRIP	1															
19	12045569	BORNA PORTAFUSIBLES	FUSE HOLDER CONNECTOR	1															
20	12024477	INTERRUPTOR MAGNETICO	MAGNETIC SWITCH	1												X			
21	12024011	CONTACTOR	CONTACTOR	3												X			
22	12024066	AMARRE INTERRUPTOR MAGNETICO	MAGNETIC SWITCH HOLDER	1															

APARATO / APPLIANCE	LAVAVAJILLAS / DISHWASHER	ZONA / ZONE	REPUESTOS RECOMENDADOS / RECOMMENDED SPARE PARTS

ITEM	CODIGO REFERENCE	DENOMINACIÓN	DENOMINATION	CO-400 W	CO-402 W												HASTA UNTIL	DESDE SINCE	ZONA / ZONE
24	12259844	BOMBA LAVADO 60HZ 260KW	WASHING PUMP 60HZ 260KW	1	1														B - LAVADO / WASHING
5	12094265	BOMBA DESAGÜE 1N 50/60Hz 38W	DRAINING PUMP 1N 50/60Hz 38W	1	1														DESAGÜE BOMBA / DRAIN PUMP
1	12280049	VALVULA ANTIRRETORNO W	NON-RETURN VALVE W	1	1														ACLARADO / RINSE
10	12025161	E.V.SIMPLE 220V. 50/60Hz	SIMPLE ELECTROVALVE	1	1														ACLARADO / RINSE
1	12242577	EMBELLECEDOR CO-400_500 W	STICKER CO-400_500 W	1	-														ELECTRICO / ELECTRIC
2	12242881	BOTON DE ENCENDIDO	POWER ON BUTTON	1	-														ELECTRICO / ELECTRIC
3	12241256	BOTON START	START BUTTON	1	-														ELECTRICO / ELECTRIC
4	12090524	RESISTENCIA TANQUE 2 kW	TANK HEATING ELEMENT 2 kW	1	1														ELECTRICO / ELECTRIC
5	12096597	TERMOSTATO DE SEGURIDAD 110 ºC	SAFETY THERMOSTAT 110 ºC	1	1														ELECTRICO / ELECTRIC
6	12025036	SONDA NTC	NTC PROBE	2	2														ELECTRICO / ELECTRIC
7	12093124	RESISTENCIA CALDERIN 2,8 kW	BOILER HEATING ELEMENT 2,8 kW	1	1														ELECTRICO / ELECTRIC
8	12102062	JUNTA TORICA RESISTENCIA	HEATING ELEMENT O-RING	1	1														ELECTRICO / ELECTRIC
9	12090518	TERMOSTATO DE SEGURIDAD 95 ºC	SAFETY THERMOSTAT 95 ºC	1	1														ELECTRICO / ELECTRIC
16	12024981	PRESOSTATO TRIPLE	TRIPLE PRESSURE SWITCH	1	1														ELECTRICO / ELECTRIC
17	12232119	TARJETA DE CONTROL 7 RELES	7 RELAY CONTROL BOARD	1	1														ELECTRICO / ELECTRIC
21	12024011	CONTACTOR	CONTACTOR	3	3														ELECTRICO / ELECTRIC
1	12241172	EMBELLECEDOR 402_502_504_174 W	STICKER 402_502_504_174 W	-	1														ELECTRICO / ELECTRIC
3	12188440	VISUALIZADOR	DISPLAY	1	1														ELECTRICO / ELECTRIC
20	12024477	INTERRUPTOR MAGNETICO	MAGNETIC SWITCH	1	1														ELECTRICO / ELECTRIC

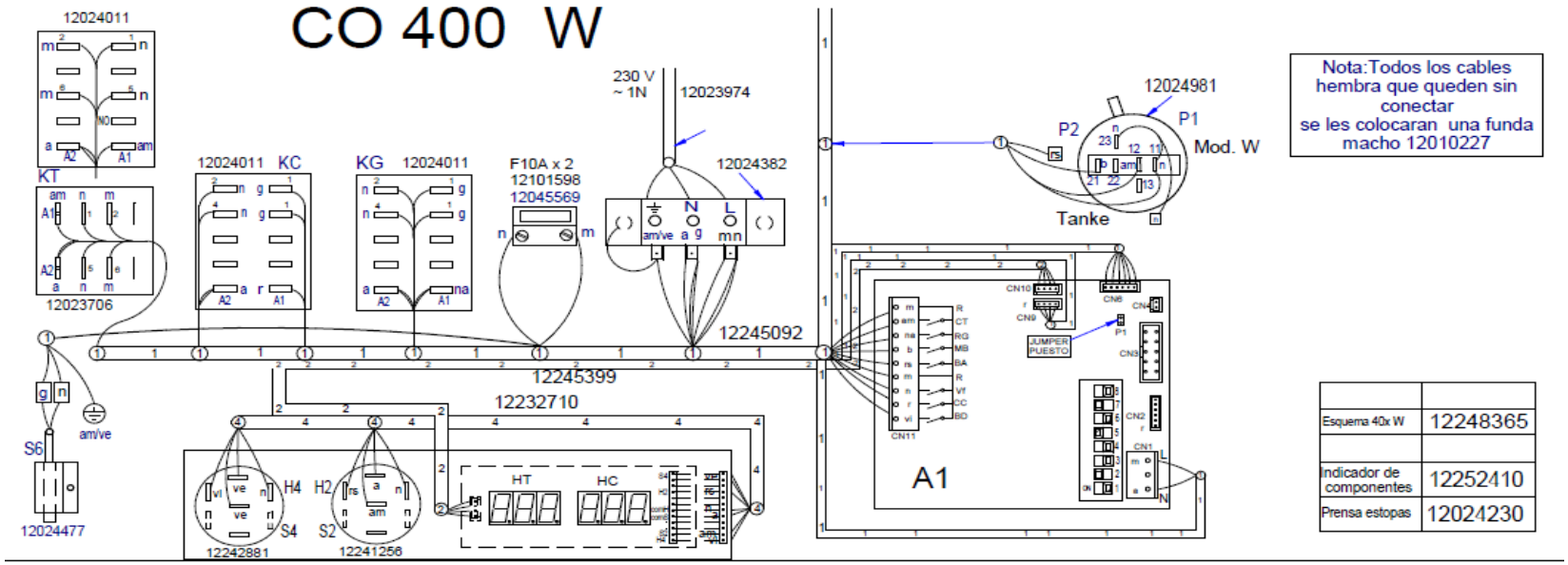

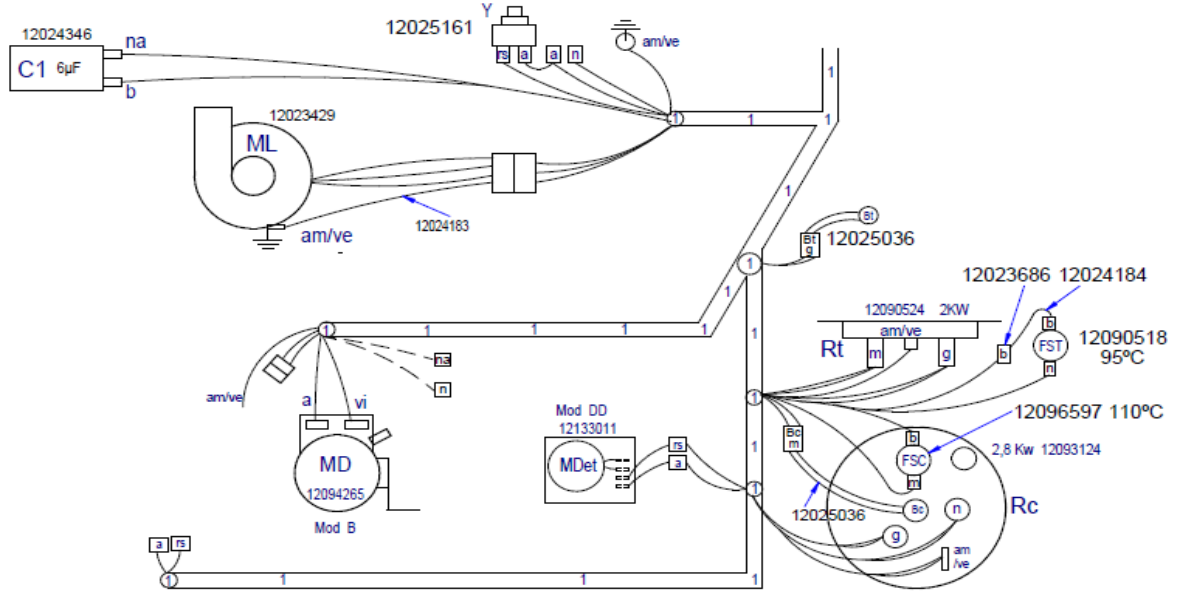

1224895
CO - 350 / 400 ..... Pag 1
CO - 400W ..... Pag 2
CO - 402 / 402W Pag3
COP 404 / PRCOP 404 .. Pag 4

12248954 Pag 2 de 4 Nov - 2020

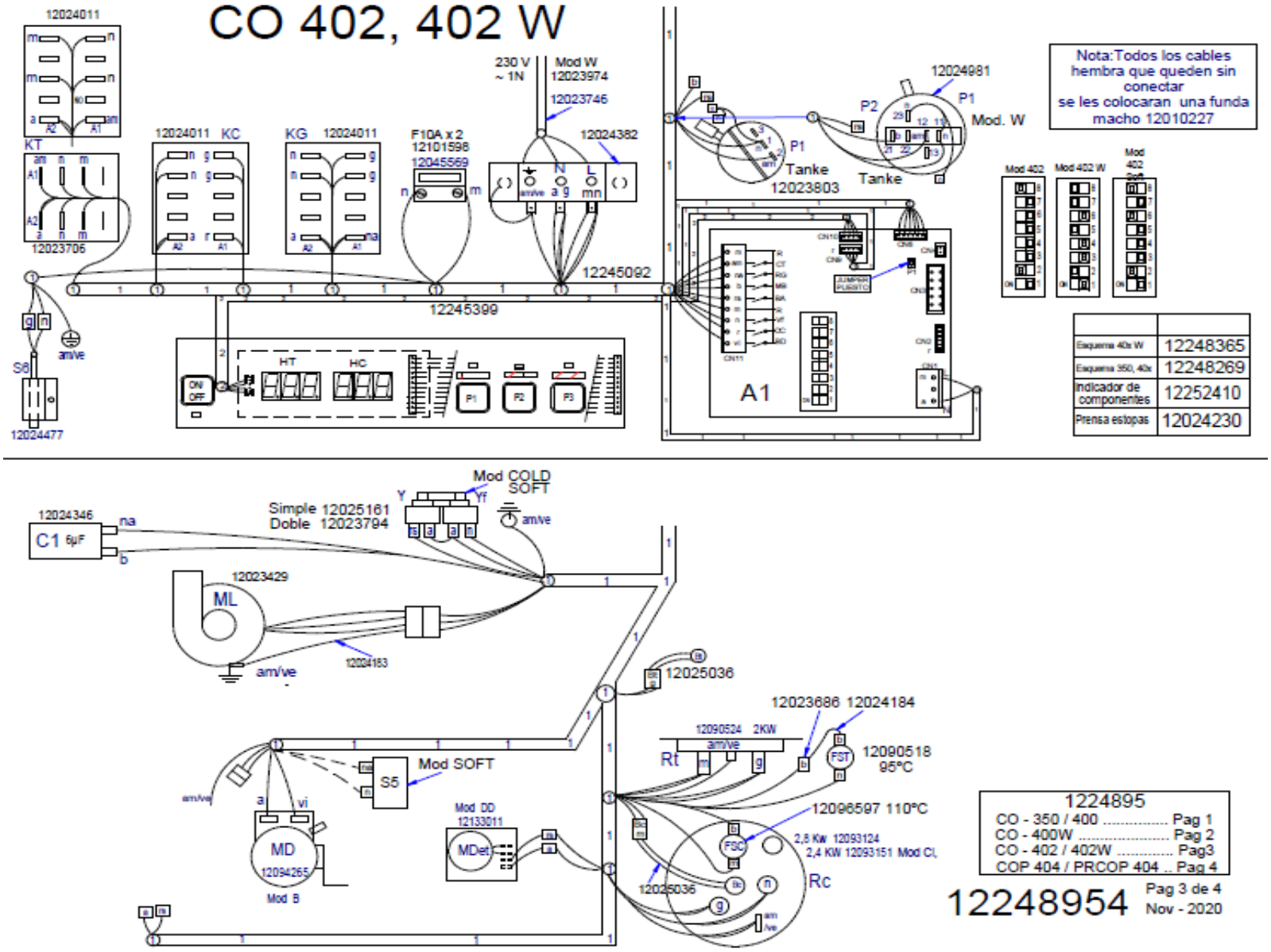
CO 402, 402 W
12024011
KT
12023706
12024011 KC
KG 12024011
F10A x 2
12101598
12045569
230 V
~ 1N
Mod W
12023974
12023746
12024382
12245092
12245399
S6
12024477
HT
HC
P1
P2
P3
A1
12024981
P2
P1
Mod. W
Tanke
12023803
Tanke
Nota:Todos los cables hembra que queden sin conectar se les colocaran una funda macho 12010227
Mod 402
Mod 402 W
Mod 402 Soft
Esquema 40x W 12248365
Esquema 350, 40x 12248269
Indicador de componentes 12252410
Prensa estopas 12024230
12024346
C1 6µF
Simple 12025161
Doble 12023794
Mod COLD SOFT
12023429
ML
12024183
12025036
12023686 12024184
12090524 2KW
Rt
12090518
95°C
Mod SOFT
S5
MD
12094265
Mod B
Mod DD
12133011
MDet
12096597 110°C
2,8 Kw 12093124
2,4 KW 12093151 Mod CL
Rc
12025036
1224895
CO - 350 / 400 ..... Pag 1
CO - 400W ..... Pag 2
CO - 402 / 402W Pag3
COP 404 / PRCOP 404 .. Pag 4
12248954
Pag 3 de 4
Nov - 2020

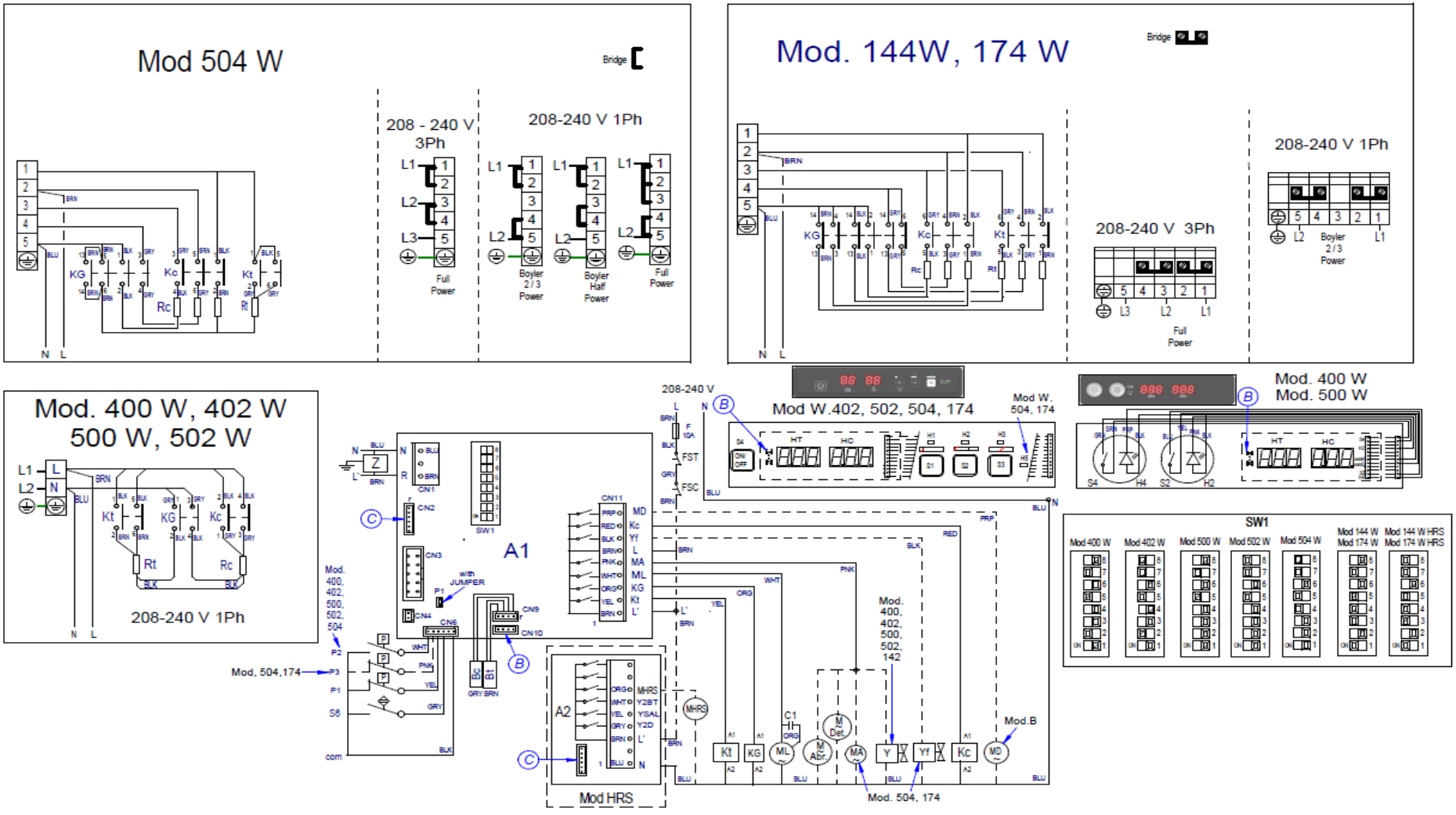

12248365 Nov - 2020

Simb / LENG		ESPAÑOL	ENGLISH	PORTUGUÉS
A1, A2	=	Placa Electrónica	Electronic Board	Placa Electrónica
A1-P1	=	Puente electrico / Jumper	Electric Bridge / Jumper	Ligação eléctrica / Jumper
Bc	=	Sonda Temperatura calderin	Boiler temperature probe	Sonda de temperatura da caldeira
Bt	=	Sonda Temperatura Tanque	Tank Temperature Probe	Sonda de temperatura do tanque
C1, C2	=	Condensador	Capacitor	Capacitor
F	=	Fusible	Fuse	Fusível
FSC	=	Termostato Seguridad Calderin	Boiler Safety Thermostat	Termostato de segurança da caldeira
FST	=	Termostato Seguridad Tanque	Tank Safety Thermostat	Termostato de segurança do tanque
H1, H2, H3	=	Lampara Ciclo	Cycle Light	Piloto do ciclo
H4	=	Lampara Encendido	Power On Light	Piloto de máquina ligada
H5 (Modxx4)	=	Lampara Effi-rinse	Effi-rinse Light	Piloto do Effi-Rinse
H5 (Mod Soft)	=	Lampara Falta Sal	Missing salt light	Piloto de falta de sal
HC	=	Display Temperatura calderin	Boiler temperature Display	Indicador de temperatura da caldeira
HT	=	Display Temperatura Tanque	Tank Temperature Display	Indicador de temperatura do tanque
Kc	=	Contactor Calentamiento Calderin	Boiler Heating Contactor	Contator de aquecimento da caldeira
KG	=	Rele General	Main Relay	Relé principal
Kt	=	Contactor Calentamiento Tanque	Tank Heating Contactor	Contator de aquecimento do tanque
L, L1,L2,L3	=	Fases Conexión Electrica	Power Supply Phases	Fases da conexão elétrica
MAbr	=	Dosificador Abrillantador	Rinse Aid Dispenser	Dosificador abrilhantador
MA	=	Bomba de Aclarado	Rinse Pump	Bomba de enxágüe
MD	=	Bomba de Desague	Drain Pump	Bomba de descarga
MDet	=	Dosificador Detergente	Detergent Dispenser	Dosificador de detergente
MHRS	=	Ventilador HRS	HRS Fan	Ventilador HRS
ML	=	Bomba de Lavado	Wash Pump	Bomba de lavagem
N	=	Neutro	Neutral	Neutro
P1	=	Presostato Tanque	Tank Pressure Switch	Pressóstato do tanque
P2	=	Presostato de seguridad Tanque	Tank Safety Pressure Switch	Pressóstato de segurança do tanque
P3	=	Presostato Calderin	Boiler Pressure Switch	Pressóstato da caldeira
PE	=	Puesta a Tierra	Earth Ground	Terra de proteção
Rc	=	Resistencia calentamiento Calderin	Boiler Heating Element	Resistência da caldeira
Rt	=	Resistencia calentamiento Tanque	Tank Heating Element	Resistência do tanque
S1, S2, S3	=	Pulsador de Programa	Program/Cycle Push button	Botão de programa
S4	=	Pulsador de Encendido/Apagado	ON/OFF Push button	Botão ON/OFF
S5	=	Interruptor falta de sal	Lack of salt switch	Interruptor falta de sal
S5 (ADE 125)	=	Interruptor Generador Agua Caliente	Water Booster Switch	Interruptor water booster
S6	=	Interruptor de Puerta	Door Switch	Interruptor da porta
SW1	=	DIP-SWITCH	DIP-SWITCH	DIP-SWITCH
TRF	=	Transformador	Transformer	Transformador
Y	=	Electrovalvula Llenado Tanque	Tank Filling Solenoid valve	Eletroválvula Enchimento do tanque
Y2BT	=	Electrovalvula Regeneracion BT	Regeneration BT Solenoid Valve	Eletroválvula Regeneração BT
Y2D	=	Electrovalvula Regeneracion Desagüe	Regeneration Drain Solenoid Valve	Eletroválvula Descarga de Regeneração
YSAL	=	Electrovalvula Regeneracion SAL	Regeneration SALT Solenoid Valve	Eletroválvula Regeneração SAL
Yf	=	Electrovalvula Llenado Calderin	Boiler Filling Solenoid valve	Eletroválvula Enchimento da caldeira
Z	=	Filtro EMC	EMC Filter	Filtro EMC
COLOR	=	**COLORES**	**COLOURS**	**CORES**
BLK, bk, n	=	Negro	Black	Preto
BLU, bl, a	=	Azul	Blue	Azul
BRN, bn, m	=	Marrón	Brown	Marrom
GRN, gn, ve	=	Verde	Green	Verde
GRY, gy, g	=	Gris	Grey	Cinza
ORG, or, na	=	Naranja	Orange	Laranja
PNK, pk, rs	=	Rosa	Pink	Rosa
PRP, pr, vi	=	Violeta	Purple	Roxo
RED, rd, r	=	Rojo	Red	Vermelho
WHT, wh, b	=	Blanco	White	Branco
YEL, yw, am	=	Amarillo	Yellow	Amarelo
YW/GN, am/ve	=	Amarillo/verde	Yellow / green	Amarelo/Verde
		NOV - 2020	***L 21, 25, 33***	***12248269***