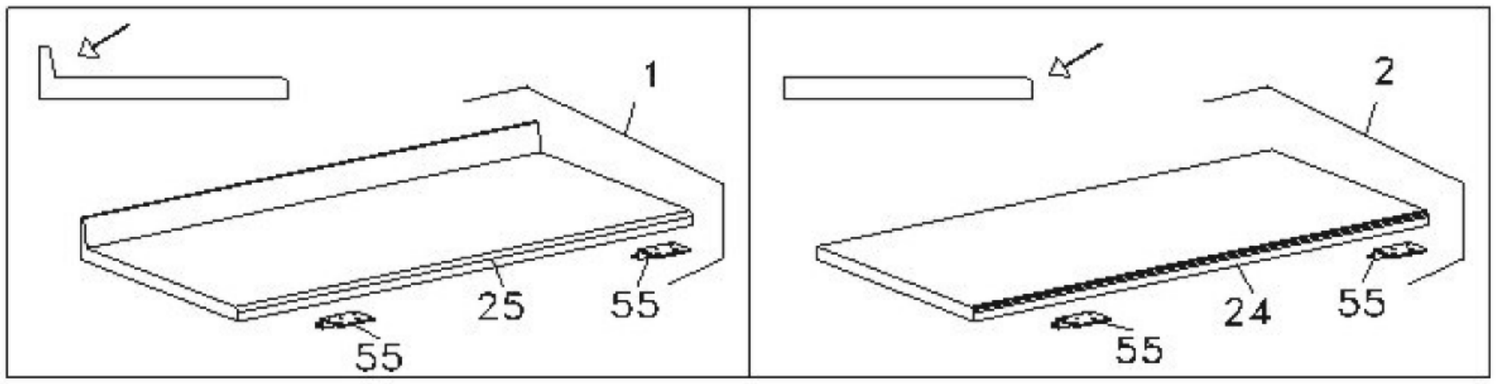
1
25
55
55
2
24
55
55

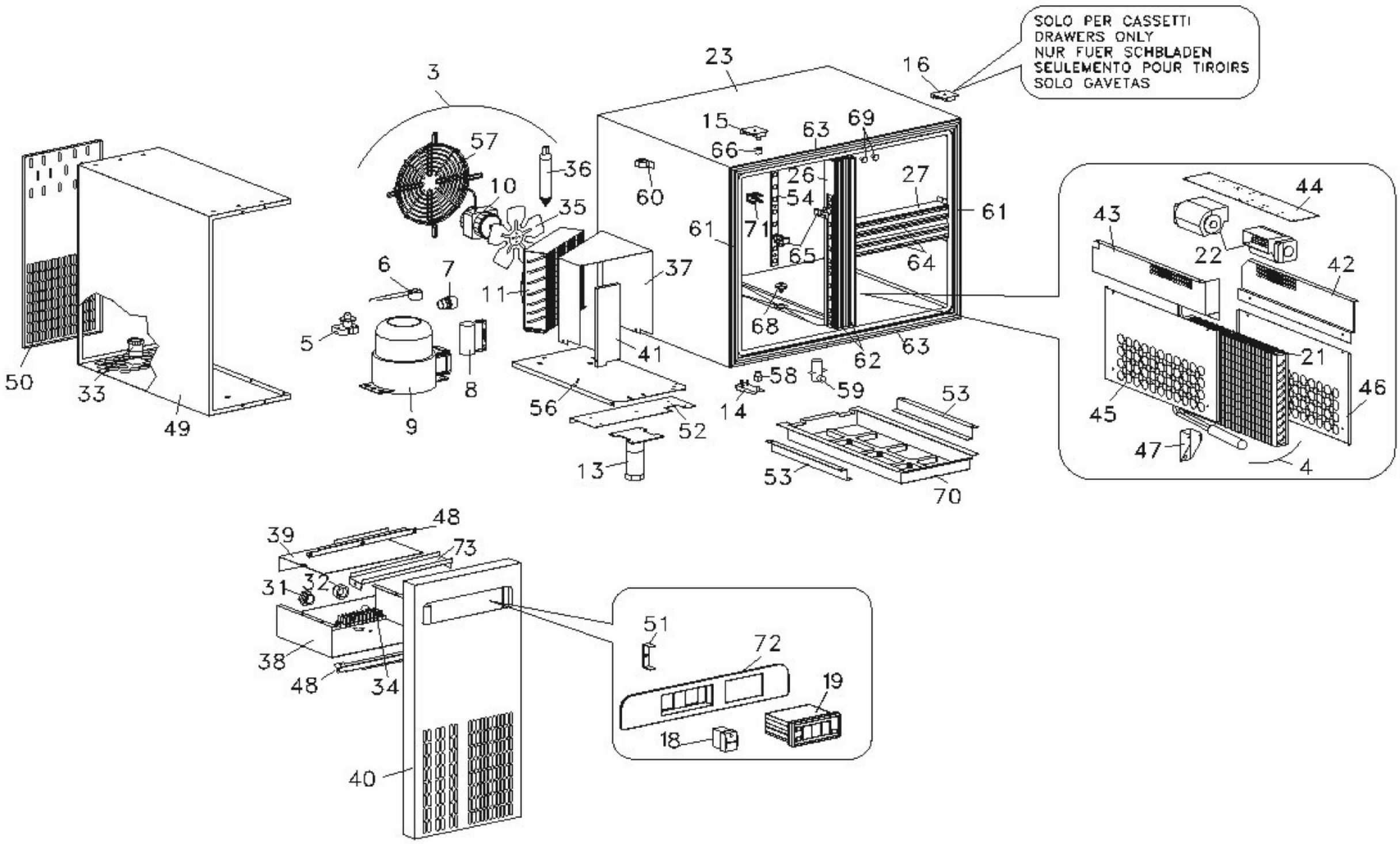
SOLO PER CASSETTI
DRAWERS ONLY
NUR FUER SCHBLADEN
SEULEMENTO POUR TIROIRS
SOLO GAVETAS
3
23
16
15
63
69
66
57
36
10
35
60
26
54
27
61
61
71
65
64
6
7
11
37
68
62
63
5
41
58
59
50
33
49
9
8
56
52
14
53
13
53
70
44
43
22
42
21
46
45
47
4
48
39
73
31
32
38
48
34
51
72
19
18
40

Modello Typ Model Modele Modelo

		EM1A EM1A/X EM1A/A	EM1A/2 EM1A/2X EM1A/2A	EM1B EM1B/X EM1B/A	EM1B/2 EM1B/2X EM1B/2A	EM1B/4 EM1B/4X EM1B/4A	EM1C EM1C/X EM1C/A	EM1C/2 EM1C/2X EM1C/2A	EM1C/4 EM1C/4X EM1C/4A	EM1C/6 EM1C/6X EM1C/6A
Porte Ture Doors Portes Portas Gabetas	SX	1	1	2	2	1	3	3	2	1
	DX	1	..	1	..	..	1	..	..	..

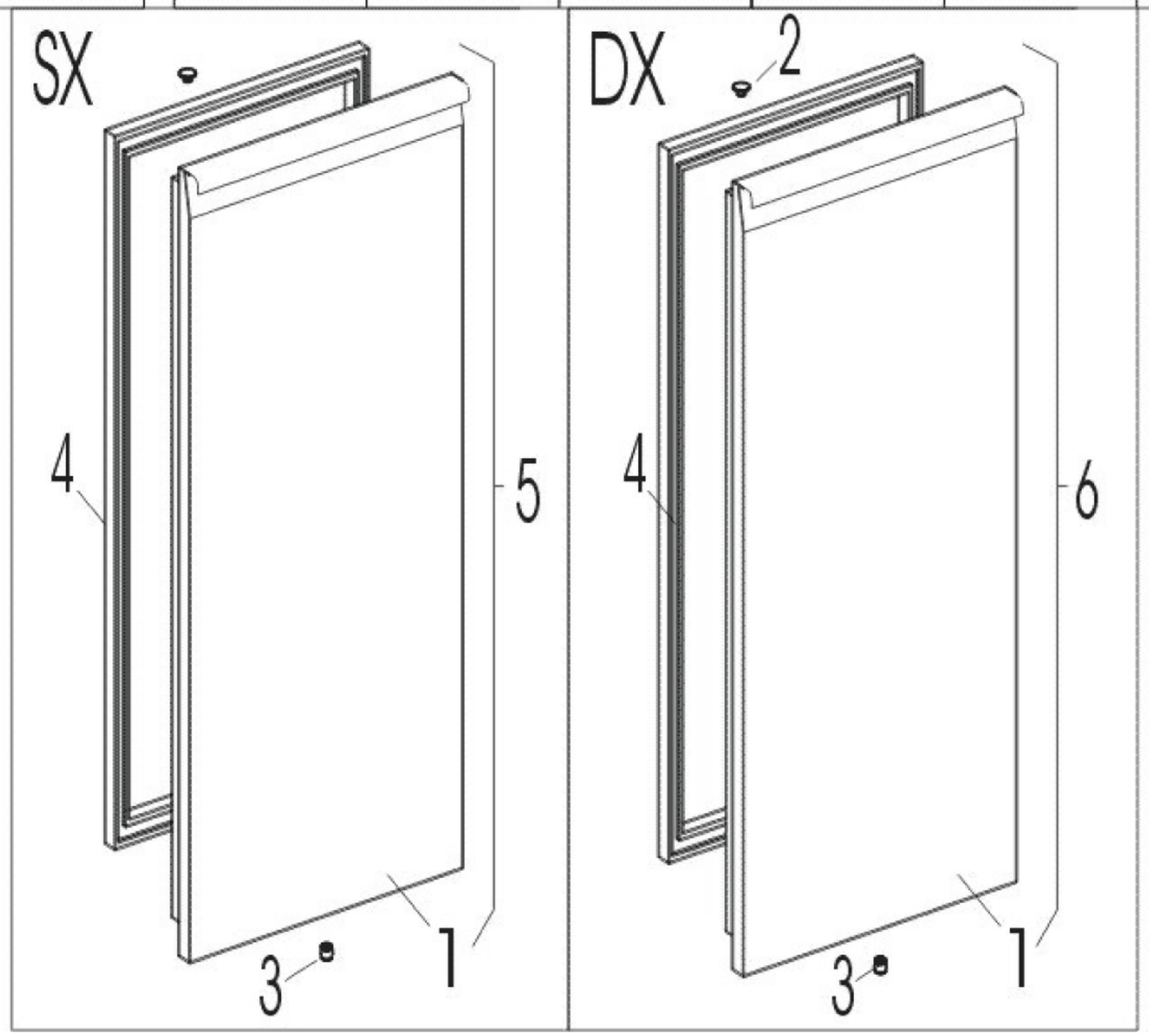

Modello Typ Model Modele Modelo

		EM1A EM1A/X EM1A/A	EM1A/2 EM1A/2X EM1A/2A	EM1B EM1B/X EM1B/A	EM1B/2 EM1B/2X EM1B/2A	EM1B/4 EM1B/4X EM1B/4A	EM1C EM1C/X EM1C/A	EM1C/2 EM1C/2X EM1C/2A	EM1C/4 EM1C/4X EM1C/4A	EM1C/6 EM1C/6X EM1C/6A
Num. Cassetti Schublad Drawers Tiroirs Gabetas	1/2	-	2	-	2	4	-	2	4	6

