Mod./Type:	_70/... GRACQE... - _90/... GRACQE... EXTREME	cod./num.	2531835.00
		data/date:	02/09/2014

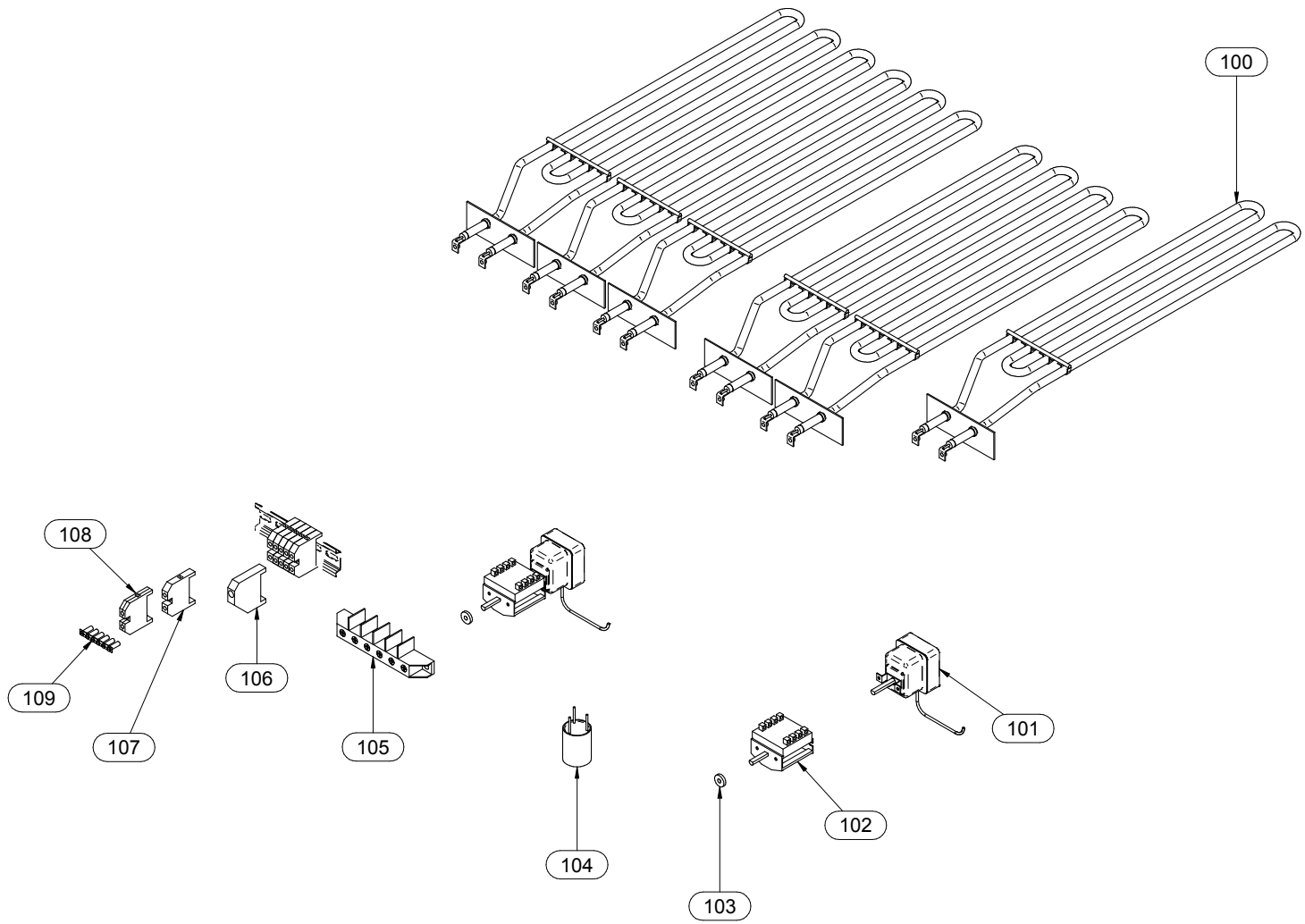

Mod./Type:	_90/... GRACQE... EXTREME	cod./num.	2531837.00
		data/date:	02/09/2014

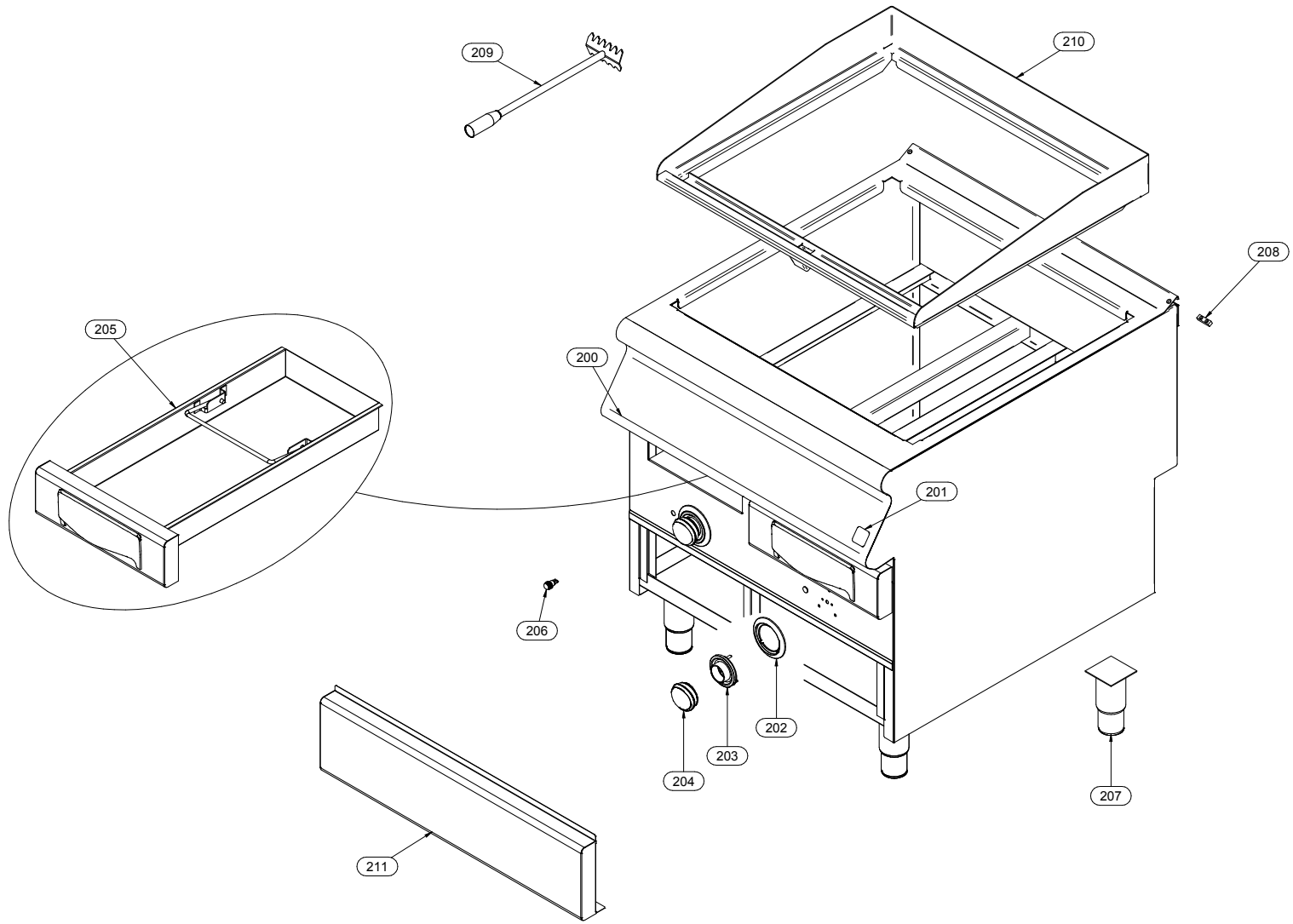

Mod.:	_70/... GRACQE... - _90/... GRACQE... EXTREME			cod. / num. 2531836.00 data / date 02/09/2014 rif. / ref. 2531835.00		_70/40 GRACQE	_70/40 GRACQE2	_70/80 GRACQE	_70/80 GRACQE2	_90/40 GRACQE	_90/40 GRACQE2	_90/80 GRACQE	_90/80 GRACQE2	NOTE
POS.	DESCRIZIONE	DESCRIPTION	DENOMINATION	BENENNUNG	COD.	Q.ty								
100	RESISTENZA	HEATING ELEMENT	RESISTANCE	HEINZELEMENT	665.102.00	3	3	6	6					
					965.062.00					3	3	6	6	
101	TERMOSTATO	THERMOSTAT	THERMOSTAT	THERMOSTAT	661.123.00	1	1	2	2	1	1	2	2	
102	COMMUTATORE	CHANGE-OVER SWITCH	COMMUTATEUR	UMSCHALTER	661.000.00	1	1	2	2	1		2		
					961.031.00						1		2	
103	GUARNIZIONE	WASHER	GUARNITURE	DICHTUNGSRING	953.020.00	1	1	2	2	1	1	2	2	
104	FILTRO ANTIDISTURBO	STORFILTER	FILTER ANTIBROUILLAGE	ANTIJAMMING FILTER	464.067.00	3	3	3	3	3	3	3	3	
105	MORSETTIERA	TERMINAL BOARD	BORNES	KLEMMENBRETT	M566050500	1	1	1	1	1	1	1	-	
106	BLOCCAMORSETTI	TERMINAL STOPPER	BORNE BLOQUANT	BLÖCK-KLEMME	663.059.00	-	-	-	-	-	-	-	1	
107	MORSETTO	TERMINAL	BORNE	KLEMME	663.061.00	-	-	-	-	-	-	-	6	
108	MORSETTO TERRA - PE	PE-TERMINAL	BORNE PE	ERD-KLEMME	663.060.00	-	-	-	-	-	-	-	1	
109	BARRETTE COLLEGAMENTO	CONNECTOR PIN	BARRETTE DE CONNECTION	VERBINDUNG-STAB	663.056.00	-	-	-	-	-	-	-	1	
110														
111														
112														
113														
114														
115														
116														
117														
118														
119														
120														
121														
122														
123														
124														
125														
126														
127														
128														
129														
130														
131														
132														
133														
134														
135														
136														

Mod.:	_90/... GRACQE			cod. / num. 2531838.00 data / date 02/09/2014 rif. / ref. 2531837.00		RICAMBI CONSIGLIATI - RECOMMENDED SPARE PARTS - PIÈCES DÉTACHÉES RECOMMANDÉES - EMPFOHLENEN ERSATZTEILE	EM90/40 GRACQE	EM90/40 GRACQE2	EM90/80 GRACQE	EM90/80 GRACQE2	NOTE	
POS.	DESCRIZIONE	DESCRIPTION	DENOMINATION	BENENNUNG	COD.		Q.ty					
200	CRUSCOTTO	CONTROL PANEL	BANDEAU	BEDIENBLENDE	9111240.00		1	1				
					9111241.00				1	1		
201	MARCHIO	BRAND NAME	MARQUE	MARKENZEICHEN	982.021.00		1	1	1	1	FROM: 15.12.2011	TO: 31.01.2014
					982.023.00		1	1	1	1	FROM: 01.02.2014	TO:...
202	SERIGRAFIA	SCREEN PRINT	SÉRIGRAPHIE	SIEBDRUCK	910.230.00		1	1	2	2		
203	LABIRINTO	LABYRINTH	LABYRINTHE	LABYRINTH	256.235.00		1	1	2	2		
204	MANOPOLA	KNOB	BOUTON	DREHKNOPF	256.234.00	*	1	1	2	2		
205	CASSETTO	DRAWER	TIROIR	SCHUBLADE	910.264.00		1	1	2	2		
206	LAMPADA SPIA ARANCIO	ORANGE INDICATOR LIGHT	LAMPE TEMOIN ORANGE	ORANGE KONTROLLAMPE	963.013.00		1	1	2	2		
207	PIEDINO	FOOT	PIED	STELLFUSS	912.090.00		4	4	4	4	FROM: 15.12.2011	TO: 17.05.2013
					912.090.14		4	4	4	4	FROM: 18.05.2013	TO:...
208	PIASTRINA GIUNZIONE	FIXING PLATE	PLAQUETTE FIXAGE	BEFESTIGUNGSPLATTE	941.130.00		1	1	1	1		
209	RASCHIETTO	SCRAPER	RACLETTE	SCHABER	610.272.00		1	1	1	1		
210	PARASPRUZZI	SPLASH GUARD	PROTECCION ANTI-ÉCLABOUSSURES	SPRITZSCHUTZ	9111366.00		1	1				
					9111367.00				1	1		
211	FACCIATA INFERIORE	FRONT LOWER PART	PARTIE FRONTALE INFÉRIEUR	UNTERE SEITE	6211544.00		1	1				
					6211549.00				1	1		
212												
213												
214												
215												
216												
217												
218												
219												
220												
221												
222												
223												
224												
225												
226												
227												
228												
229												
230												
231												
232												
233												
234												
235												