DESPIECE TECNICO

Lavavajillas de apertura frontal
Lave-vaisselle à ouverture frontale
Front loading dishwasher
Geschirrspülmaschinen mit frontbeladung
Lavastoviglie ad apertura frontale
Lava-louças de apertura frontal

Modelos:

AD-64 HY

Noviembre 2010 November

Fagor Industrial

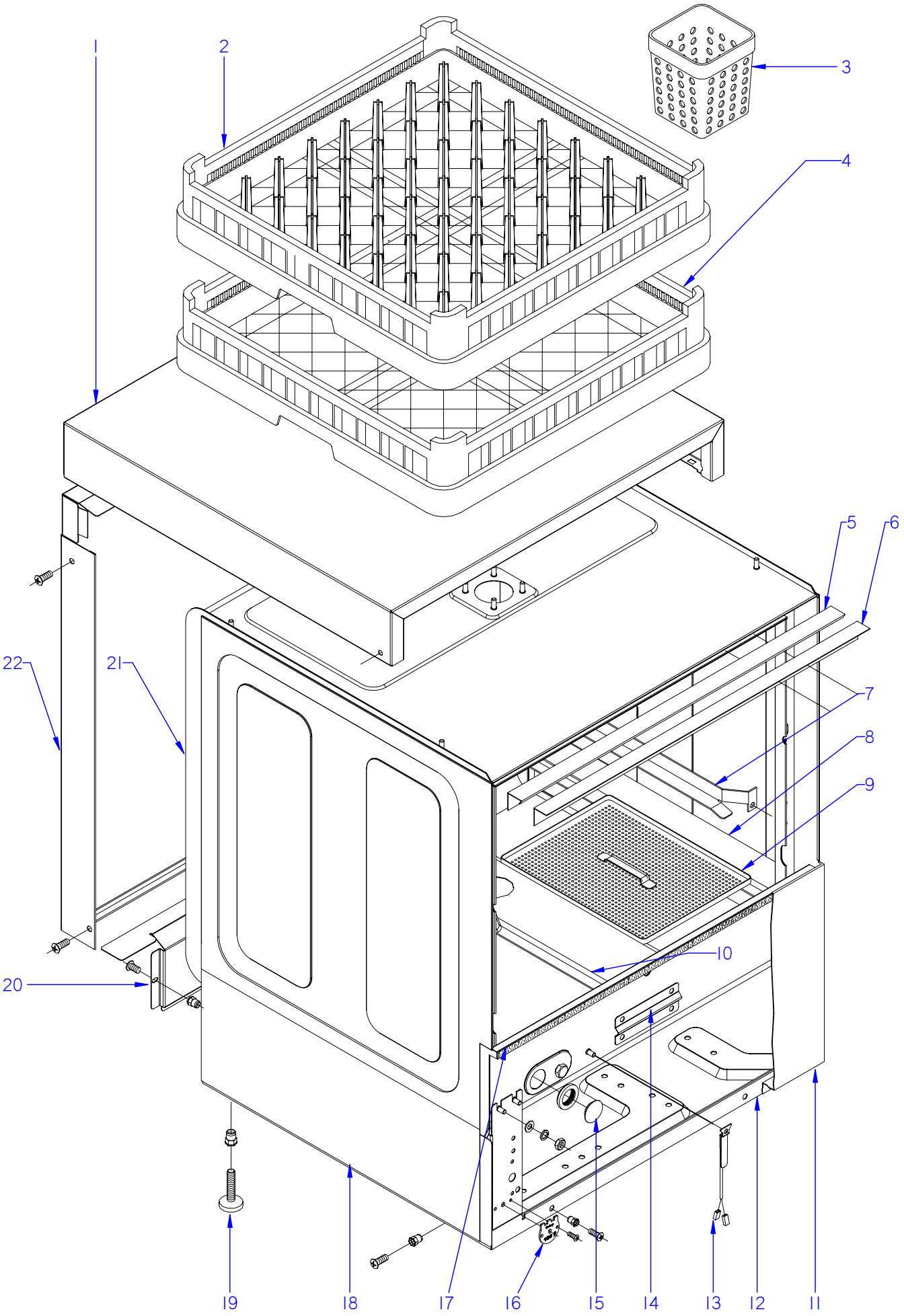

ITEM MARCADO EN COLOR = REPUESTO RECOMENDADO
COLOURED ITEM = RECOMMENDED SPARE PART

N plano	Firma	Fecha	Aparato	MUEBLE	Lamina	
C-2722		2010-11	LAVAVAJILLAS AD-64 HY		1	Fagor Industrial S.Coop. FAGOR Oñate

MOD.	LAVAVAJILLAS DE APERTURA FRONTAL FRONT LOADING DISHWASHER	ZONA / ZONE	MUEBLE / FITTING	PLANO DIAGRAM	C-2722

ITEM	CODIGO CODE	DENOMINACION	NAME	AD-64 HY							
1	Z212919000	TAPA DOBLE PARED AD48	COVER AD48	1							
	Q221342000	REMACHE EXAGONAL M5	HEXAGONAL RIVET M5	2							
	Q152004000	TORNIL, APLASTADO M5x13 A304	FLAT HEADED BOLT M5x13 A304	6							
	Z442918000	CLIP CIERRE	CLIP CLOSING	4							
2	Z655302000	CESTILLO PLATOS CP-16-18	BASKET CP-16-18	1							
3	Z655314000	CESTILLO CUBIERTOS	CUTLERY BASKET	4							
4	Z655301000	CESTILLO BASE CT-10	BASE BASKET CT-10	1							
	Z209121000	TOPE 50x50x80	TOP 50x50x80	2							
5	Z200315000	PERFIL CAJA	BOX PROFILE	1							
6	Z200309000	ESCUADRA SUJECCION PERFIL	FASTENING BRACKET PROFILE	1							
7	Z200305000	GUIA CESTILLO DERECHO	RIGHT BASKET GUIDE	1							
S/Nº	Z200306000	GUIA CESTILLO IZQUIERDO	LEFT BASKET GUIDE	1							
	Q162040000	TUERCA EXAGONAL M6	WASHER A6	4							
	Q232040000	ARANDELA A6	HEXAGONAL NUT M6	4							
8	Z210805000	SOPORTE DERECHO BANDEJAS	RIGHT TRAY SUPPORT	1							
S/Nº	Z210806000	SOPORTE IZDO. BANDEJAS	LEFT TRAY SUPPORT	1							
	Q162040000	TUERCA EXAGONAL M6	HEXAGONAL NUT M6	4							
	Q232040000	ARANDELA A6	WASHER A6	4							
9	Z210802000	BANDEJA COMPLETA	COMPLETE TRAY	4							
10	Z210804000	SOPORTE CENTRAL BANDEJAS	TRAY SUPPORT CENTRAL	1							
11	Z228812000	PANEL FRONTAL B SIN PUERTA	FRONT PANEL B	1							
	Q152004000	TORNIL, APLASTADO M5x13 A304	FLAT HEADED BOLT M5x13 A304	2							
12	Z200101000	ARMAZON COMPLETO	COMPLETE FRAME	1							
13	Z713028000	SONDA TEMPERATURA GICAR	TEMPERATURA PROBE GICAR	1							
S/Nº	Z718004000	AMARRE SONDA	PROBE CATCH	1							
	Q162020000	TUERCA EXAGONAL M4	HEXAGONAL NUT M4	1							
	Q242010000	ARANDELA ABANICO A.3 A304	FAN WASHER A.3 A304	1							
14	Z748008000	SOPORTE BULBO TERMOSTATO	THERMOSTAT BULB SUPPORT	1							
	Q162040000	TUERCA EXAGONAL M6	HEXAGONAL NUT M6	2							
	Q262040000	ARANDELA GROW. A6 A.304	WASHER GROW. A6 A.304	2							

MOD.	LAVAVAJILLAS DE APERTURA FRONTAL FRONT LOADING DISHWASHER	ZONA / ZONE	MUEBLE / FITTING	PLANO DIAGRAM	C-2722

ITEM	CODIGO CODE	DENOMINACION	NAME	AD-64 HY							NOTAS
15	P443060000	TAPON	STOPPER	1							
	N503017000	SOPORTE TERMOSTATO 1001713	THERMOSTAT SUPPORT 100171	1							
16	Z713038000	REGU. TERMOS. TANQUE 60 ºC	THERM.TANQUE REGULATOR	1							
17	Z200313000	PERFIL GOMA ESPONJOSA	GOMA PROFILE	1							
18	Z212917000	PANEL LATERAL IZDO. DOBLE P.	LEFT SIDE PANEL	1							
S/Nº	Z212918000	PANEL LATERAL DCHO. DOBLE P.	RIGHT SIDE PANEL	1							
	Q152004000	TORNIL, APLASTADO M5x13 A304	FLAT HEADED BOLT M5x13 A304	4							
	Q221012000	TUERCA RAPIDA M,5	RAPID NUT M,5	2							
19	Z200107000	PATA REGULABLE	ADJUSTABLE LEG	4							
20	Z258941000	PANEL POSTERIOR INFERIOR	LOWER REAR PANEL	1							
	Q152004000	TORNIL, APLASTADO M5x13 A304	FLAT HEADED BOLT M5x13 A304	2							
21	Z200342000	CAJA SOLDADA LJ. A.F. AD HY	WELDED BOX LJ. A.F. AD HY	1							
	Q302022000	ARANDELA 16X6X1.2 A.304	WASHER 16X6X1.2 A.304	8							
	Q262040000	ARANDELA GROW. A6 A.304	WASHER GROW. A6 A.304	8							
22	Z212920000	PANEL POSTER. DOBLE PARED	REAR PANEL ALU.FI-30	1							
	Q152004000	TORNIL, APLASTADO M5x13 A304	FLAT HEADED BOLT M5x13 A304	4							

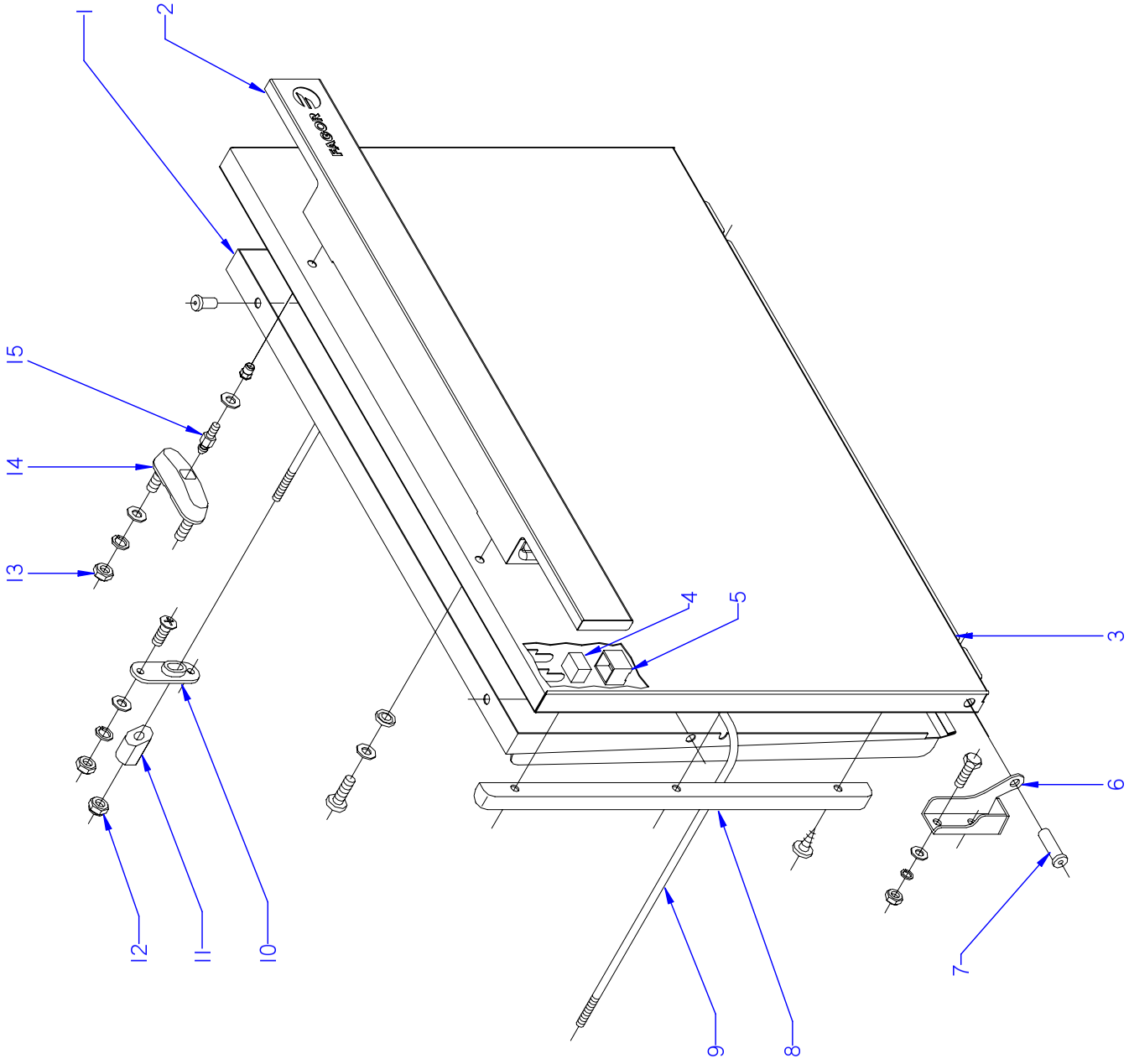

ITEM MARCADO EN COLOR = REPUESTO RECOMENDADO
COLOURED ITEM = RECOMMENDED SPARE PART

N plano	Firma	Fecha	Aparato	Lamina	
C-2723		2010-11	PUERTA / DOOR LAVAVAJILLAS AD-64 HY	2	Fagor Industrial S.Coop. Oñate

MOD.	LAVAVAJILLAS DE APERTURA FRONTAL FRONT LOADING DISHWASHER	ZONA / ZONE	PUERTA / DOOR	PLANO DIAGRAM	C-2723

ITEM	CODIGO CODE	DENOMINACION	NAME	AD-64 HY							
1	Z200556000	CONTRAPUERTA COMPLETA	COMPL. DOOR REVERSE	1							
	Q412000000	REMACHE TUBULAR 4 x 8	TUBULAR RIVET 4 x 8	4							
	Q162030000	TUERCA EXAGONAL M5	HEXAGONAL NUT M5	2							
	Q262030000	ARANDELA GROW. A5 A.304	WASHER GROW. A5 A.304	2							
2	Z210502000	ASA AD-48C	HANDLE AD-48C	1							
S/Nº	Z200564000	TACO SUJECCION	FASTENING RAWL	2							
3	Z200561000	PUERTA COMPLETA AD	COMPLETE DOOR AD	1							
S/Nº	Z206135000	CHECK LIST LAVAVAJILLAS FAGOR	CHECK LIST	1							
4	Z200506000	IMAN	MAGNET	1							
5	Z200507000	PROTECTOR IMAN	MAGNET PROTECTOR	1							
6	Z400514000	BISAGRA IZQUIERDA T-C.	LEFT HINGE T-C.	1							
S/Nº	Z400515000	BISAGRA DERECHA T-C.	RIGHT HINGE T-C.	1							
	Q012042000	TORNILLO EXAGONAL M6X15	HEXAGONAL BOLT M6x15	4							
	Q262040000	ARANDELAGROW. A6 A.304	WASHER GROW. A6 A.304	4							
	Q162040000	TUERCA EXAGONAL M6	HEXAGONAL NUT M6	4							
7	Z400516000	EJE PUERTA	DOOR SHAFT	2							
8	Z200524000	MARCO PUERTA	DOOR FRAME	2							
	Q412000000	REMACHE TUBULAR 4 x 8	TUBULAR RIVET 4 x 8	6							
9	Z200555000	VARILLA TENSOR	TIGHTENER ROD	1							
10	Z200310000	SOPORTE TENSOR	TIGHTENER SUPPOR	2							
	Q152004000	TORNIL, APLASTADO M5x13 A304	FLAT HEADED BOLT M5x13 A304	4							
	Q162030000	TUERCA EXAGONAL M5	HEXAGONAL NUT M5	4							
	Q262030000	ARANDELA GROW. A5 A.304	WASHER GROW. A5 A.304	4							
11	Z200522000	TENSOR PUERTA	TIGHTENER DOOR	2							
12	Q222012000	TUERCA AUTOB. M6	SELF-LOCKING NUT M6	2							
13	Q222012000	TUERCA AUTOB. M6	SELF-LOCKING NUT M6	4							
14	Z200607000	CONJUNTO CIERRE PUER.T-CO	LOCK UNIT PUERTAT-CO	2							
15	Z200601000	ENGANCHE CIERRE	LOCK LATCH	2							

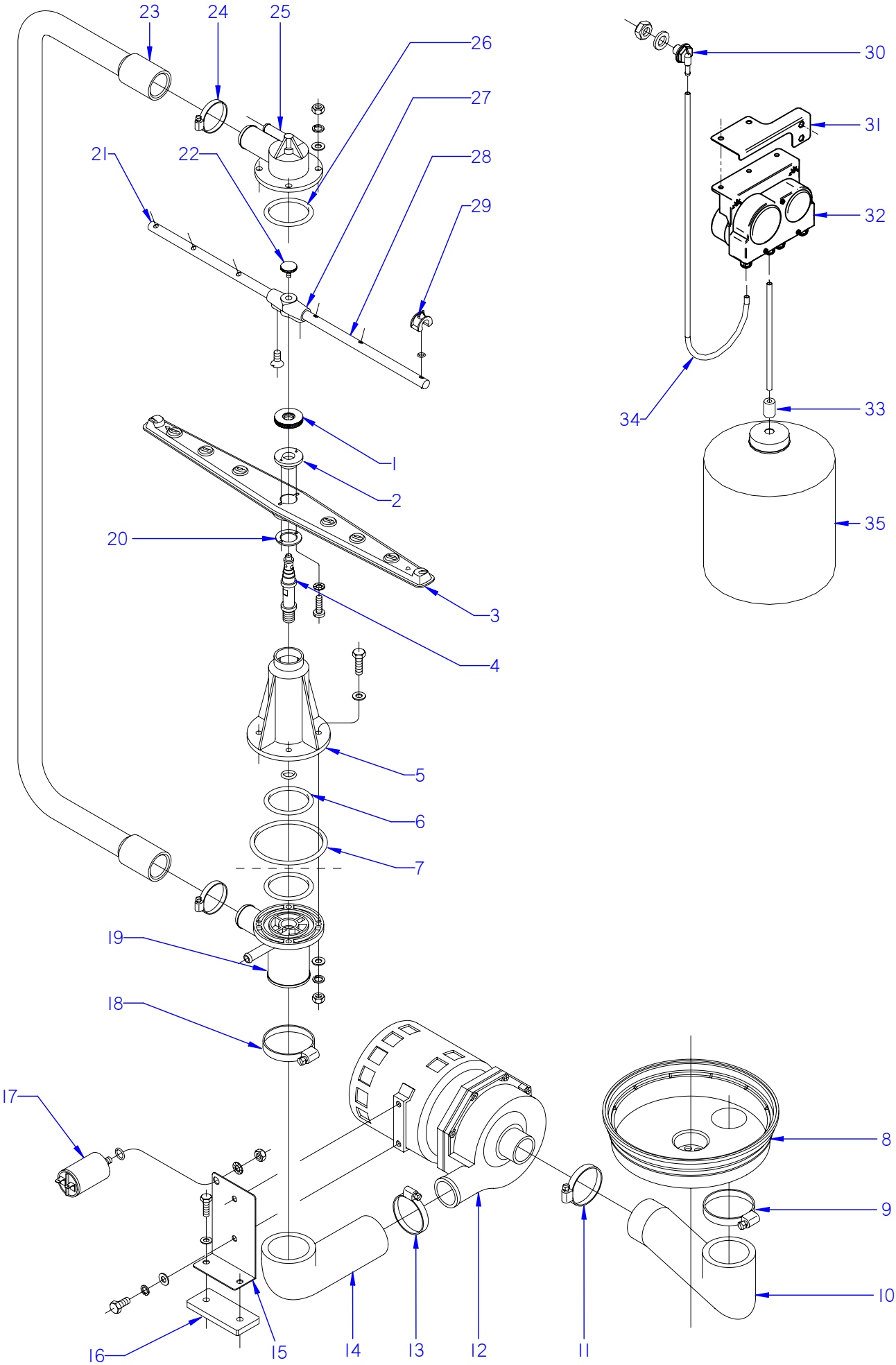

ITEM MARCADO EN COLOR = REPUESTO RECOMENDADO
COLOURED ITEM = RECOMMENDED SPARE PART

N plano	Firma	Fecha	Aparato	Lamina	
C-2724		2010-11	PARTE FUNCIONAL LAVADO / WASH FUNCTIONAL PART LAVAVAJILLAS AD-64 HY	3	Fagor Industrial S.Coop. FAGOR Oñate

MOD.	LAVAVAJILLAS DE APERTURA FRONTAL FRONT LOADING DISHWASHER	ZONA / ZONE	PARTE FUNCIONAL LAVADO WASH FUNCTIONAL PART	PLANO DIAGRAM	C-2724

ITEM	CODIGO CODE	DENOMINACION	NAME	AD-64 HY							NOTAS
1	Z200705000	TUERCA ESPECIAL M.14X1	SPECIAL NUT M.14X1	2							
2	Z650704000	ENGANCHE DISTRIBUIDOR	DISTRIBUTOR CATCH	2							
3	Z650716000	DISTRIBUIDOR MONTADO	DISTRIBUTOR	2							
4	Z200704000	EJE CENTRAL	CENTRAL SHAFT	2							
5	Z200701000	SOPORTE DISTRIBUID. INFERIOR	LOWER DISTRIB. SUPPORT	1							
	Q307050000	JUNTA TOR.13.94X19.18X2.6	O-RING 13.94X19.18X2.6	1							
	Q012046000	TORNIL. EXAGONAL M6X40 A.304	HEXAGONAL BOLT M6X40 A.304	4							
	Q306050000	ARANDELA Ø6X12X1.5	WASHER Ø6X12X1.5	4							
6	Q307052000	JUNTA TOR.50.17X60.83X5.3	O-RING 50.17X60.83X5.3	2							
7	Q307049000	JUNTA TOR.85.09X95.75X5.3	O-RING 85.09X95.75X5.3	1							
8	Z200906000	CUBETA	TRAY	1							
9	Q881324000	ABRAZADERA 50-70L	CLAMP 50-70L	1							
10	Z200904000	CODO ASPIRACION 1003018	EXTRACTOR ELBOW	1							
11	Q881324000	ABRAZADERA 50-70L	CLAMP 50-70L	1							
12	Z201011000	BOMBA DE LAVADO	WASH PUMP	1							
13	Q881307000	ABRAZADERA 40-60	CLAMP 40-60	1							
14	Z200905000	CODO IMPULSION 1003017	IMPULSE ELBOW 1003017	1							
15	Z201002000	SOPORTE MOTOBO.F-3-4-5-6	MOTOR PUMP SUPPORT	1							
	Q012041000	TORNIL. EXAGONAL M6X10 A.304	HEX BOLT M6X10 A.304	2							
	Q232040000	ARANDELA A6	FAN WASHER A6	2							
	Q262040000	ARANDELA GROW. A6 A.304	WASHER GROW. A6 A.304	2							
16	Z201003000	BASE BOMBA LAVADO 1003016	WASH PUMP BASE	1							
	Q012033000	TORNIL. EXAGONAL M5X20 A.304	HEX BOLT M5X20 A.304	2							
	Q232030000	ARANDELA A5	FAN WASHER A5	2							
17	V321300000	CONDENSADOR 10 M.F.	CONDENSER 10 M.F.	1							
	Q307048000	JUNTA TORICA 9.12X16.18X3.53	O-RING 9.12X16.18X3.53	1							
	Q162050000	TUERCA EXAGONAL M8x1 INOX.	HEXAGONAL NUT M8x1 INOX.	1							
	Q261050000	ARANDELA MUELLE A8	SPRING WASHER A8	1							
18	Q881324000	ABRAZADERA 50-70L	CLAMP 50-70L	1							

MOD.	LAVAVAJILLAS DE APERTURA FRONTAL FRONT LOADING DISHWASHER	ZONA / ZONE	PARTE FUNCIONAL LAVADO WASH FUNCTIONAL PART	PLANO DIAGRAM	C-2724

ITEM	CODIGO CODE	DENOMINACION	NAME	AD-64 HY							NOTAS
19	Z200703000	PASAMUROS	WALL BUSHING	1							
	Q232040000	ARANDELA A6	WASHER A6	4							
	Q262040000	ARANDELA GROW. A6 A.304	WASHER GROW. A6 A.304	4							
	Q162040000	TUERCA EXAGONAL M6	HEXAGONAL NUT M6	4							
20	Z650711000	AMARRE ENGANCHE DISTRIBUID.	DISTRIBUT. CATCH FASTENING	2							
	Q152015000	TORNILLO ALOMADO M3X6	CURVED SCREW M3X6	4							
	Q242010000	ARANDELA ABANICO A.3 A304	FAN WASHER A.3 A304	4							
21	Z201902000	RAMA DE ACLARADO IZQUIERDA	LEF TRINSE BRANCH	2							
22	Q152016000	TORNILLO ESPECIAL M.5X0.8	SPECIAL BOLT M.5X0.8	2							
23	Z200706000	ARBOL DE LAVADO	WASH CAM	1							
24	Q881305000	ABRAZADERA 25-40	CLAMP 25-40	2							
25	Z200707000	SOPORTE DISTRIBUIDOR SUPER.	UPPER DISTRIB. SUPPORT	1							
	Q232040000	ARANDELA A6	WASHER A6	4							
	Q262040000	ARANDELA GROW. A6 A.304	WASHER GROW. A6 A.304	4							
	Q162040000	TUERCA EXAGONAL M6	HEXAGONAL NUT M6	4							
26	Q307052000	JUNTA TOR.50.17X60.83X5.3	O-RING 50.17X60.83X5.3	1							
27	Z201903000	SOPORTE RAMAS ACLARADO	TRINSE BRANCH SUPPORT	2							
	Q042021000	TORN. AVELLANADO M4X10 A.304	COUNTERSUNK BOLT M4X10 A3	4							
28	Z201901000	RAMA DE ACLARADO DERECHA	RIGHT TRINSE BRANCH	2							
29	Z211903000	TOBERA ACLARADO	RINSE NOZZLE	12							
30	Z230905000	PASAMUROS BOMBA DESAGUE	DRAINAGE PUMP WALL BUSH.	1							
31	Z208434000	SOPORTE DOSIFICADOR W	DOSEFOR W SUPPORT	1							
	Q012041000	TORNIL.EXAGONAL M6X10 A.304	HEXAGONAL BOLT M6X10	2							
	Q012031000	TORNIL.EXAGONAL M5X10 A.304	HEXAGONAL BOLT M5X10	2							
32	Z208915000	DOSIFICADOR DGTE ABRILLANT.	DETERGENT DISPENSER RINS.	1							
S/Nº	Z448614000	CONDUCTO ASPIRACIÓN	CONDUIT	1							
33	Z701152000	PESO FILTRO	FILTER WEIGHT	1							
34	3699300000	CONDUCTO DOSIFICAFOR TRANS.	CONDUIT	1							

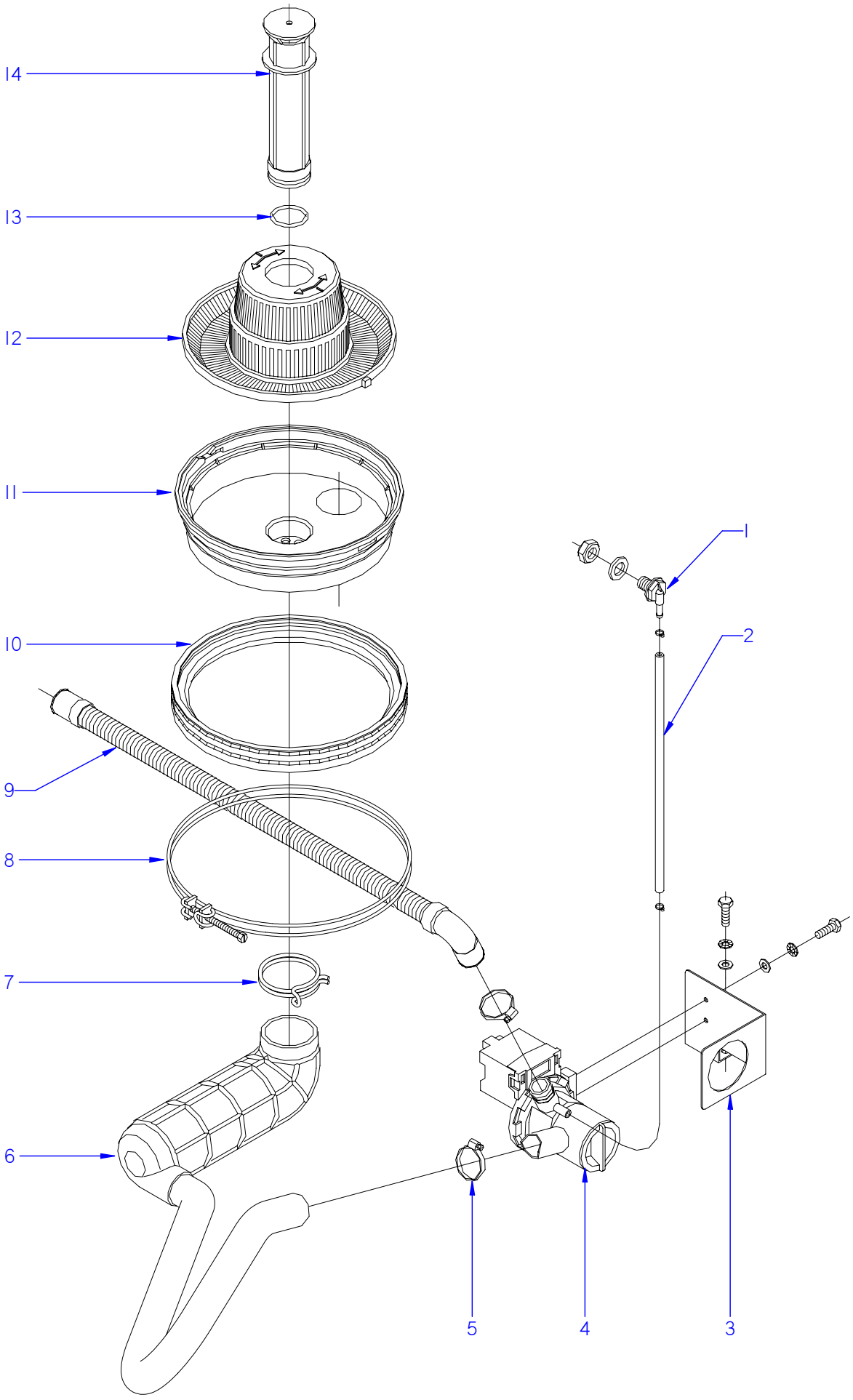

ITEM MARCADO EN COLOR = REPUESTO RECOMENDADO
COLOURED ITEM = RECOMMENDED SPARE PART

N plano	Firma	Fecha	Aparato	Lamina	
C-2725		2010-11	PARTE FUNCIONAL DESAGÜE / DRAINAGE FUNCTIONAL PART LAVAVAJILLAS AD-64 HY	4	Fagor Industrial S.Coop. FAGOR Oñate

MOD.	LAVAVAJILLAS DE APERTURA FRONTAL FRONT LOADING DISHWASHER	ZONA / ZONE	PARTE FUNCIONAL DESAGÜE DRAINAGE FUNCTIONAL PART	PLANO DIAGRAM	C-2725

ITEM	CODIGO CODE	DENOMINACION	NAME	AD-64 HY							NOTAS
1	Z230905000	PASAMUROS BOMBA DESAGUE	DRAINAGE PUMP WALL BUSH.	1							
	Q306024000	JUNTA Ø18X12.5X1.5	SEAL 18X12.5X1.5	1							
	Q162070000	TUERCA EXAGONAL M12	HEXAGONAL NUT M12	1							
2	3702400000	TUBO GOMA NEGRO Ø 8*4	BLACK RUBBER PIPE Ø 8*4	1							
	P102154000	BRIDA ELASTICA TUBO	ELASTIC PIPE FLANGE	2							
3	Z220904000	SOPORTE BOMBA DESAGUE	DRAINAGE PUMP SUPPORT	1							
	Q012031000	TORNIL.EXAGONAL M5X10 A.304	HEXAGONAL BOLT M5x10	4							
	Q242030000	ARAND.ABAN. A5 A.304	FAN WASHER A5 A.304	4							
	Q232030000	ARANDELA A5	WASHER A5	4							
	Q232040000	ARANDELA A6	WASHER A6	2							
4	Z220901000	BOMBA DESAGUE 30W	DRAINAGE PUMP 30W	1							
5	Q881305000	ABRAZADERA 25-40	CLAMP 25-40	2							
6	Z220902000	ACUMULADOR 1503019	ACCUMULATOR 1503019	1							
7	Q901308000	ABRAZAD. ELAST. 56-58.8	ELASTIC CLAMP 56-58.8	1							
8	Z200908000	ABRAZADERA CUBETA COMPL.	TRAY CLAMP	1							
9	Z220903000	MANGUERA DESAGUE	DRAINAGE HOSE	1							
10	Z200907000	JUNTA CUBETA	TRAY SEAL	1							
11	Z200906000	CUBETA	TRAY	1							
12	Z200922000	CONJUNTO FILTRO AF.	FILTER	1							
13	Q307051000	JUNTA TOR.36.17X41.41X2.6	O-RING 36.17X41.41X2.6	1							
14	Z200909000	ALIVIADERO	OVERFLOW	1							

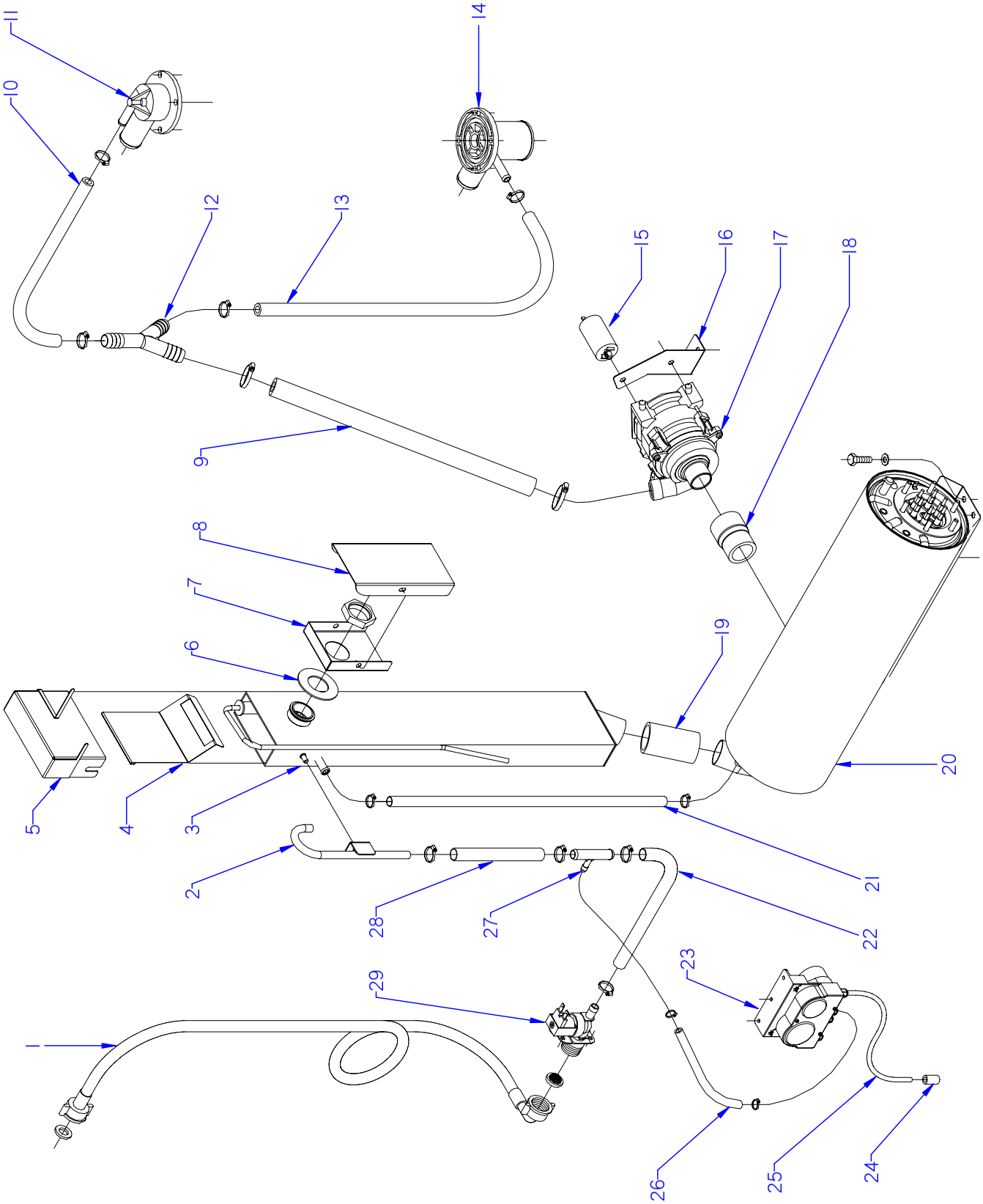

ITEM MARCADO EN COLOR = REPUESTO RECOMENDADO
COLOURED ITEM = RECOMMENDED SPARE PART

N plano	Firma	Fecha	Aparato	Lamina	
C-2726		2010-11	PARTE FUNCIONAL ACLARADO / RINSE FUNCTIONAL PART LAVAVAJILLAS AD-64 HY	5	Fagor Industrial S.Coop. Oñate

MOD.	LAVAVAJILLAS DE APERTURA FRONTAL FRONT LOADING DISHWASHER	ZONA / ZONE	PARTE FUNCIONAL ACLARADO RINSE FUNCTIONAL PART	PLANO DIAGRAM	C-2726

ITEM	CODIGO CODE	DENOMINACION	NAME	AD-64 HY							NOTAS
1	Z602121000	MANGUERA ENTRADA AGUA	WATER INTAKE HOSE	1							
2	Z258903000	CAÑO COMPLETO	COMPLETE SPOUT	1							
	Q232040000	ARANDELA A6	WASHER A6	1							
	Q162040000	TUERCA EXAGONAL M6	HEXAGONAL NUT M6	1							
3	Z258906000	DEPÓSITO COMPLETO	COMPLETE TANK	1							
4	Z258953000	TAPA INTERIOR DEPOSITO	TANK INNER COVER	1							
5	Z258955000	CUBIERTA DEPÓSITO	TANK COVER	1							
	Q162040000	TUERCA EXAGONAL M6	HEXAGONAL NUT M6	1							
	Q232040000	ARANDELA A6	WASHER A6	1							
6	R675007000	JUNTA RETENCION VAPORES	STEAM RETAINER SEAL	1							
7	Z258938000	CUBIERTA PASAMUROS INTER.	INTER. BUSHING COVER	1							
	Q223014000	CONTRATUERCA 1 LATON	COUNTERNUT 1 BRASS	1							
8	Z258939000	CUBIERTA PASAMUROS EXTER.	EXTER. BUSHING COVER	1							
	Q222011000	REMACHE EXAGONAL M5 INOX.	HEXAGONAL RIVET M5 INOX	2							
	Q152004000	TORNIL, APLASTADO M5x13 A304	FLAT HEADED BOLT M5x13 A304	2							
9	Z258967000	MANGUERA ENJUAGUE BOMBA	RINSE PUMP HOSE	1							
10	3676900000	TUBO GOMA NEGRA Ø 17*10	BLACK RUBBER PIPE 17*10	1							
	Q881302000	ABRAZADERA 12-20	CLAMP 12-20	2							
11	Z200707000	SOPORTE DISTRIB. SUPERIOR	UPPER DISTRIB. SUPPORT	1							
12	Z201106000	RACORD EN Y	Y-CONNECTION	1							
13	3676900000	TUBO GOMA NEGRA Ø 17*10	BLACK RUBBER PIPE 17*10	1							
	Q881302000	ABRAZADERA 12-20	CLAMP 12-20	2							
14	Z200703000	PASAMUROS	BUSHING	1							
15	Z258969000	CONDENSADOR 5 µF	CONDENSER 5 µF	1							
16	Z258968000	SOPORTE BOMBA HANNING	HANNING SUPPORT RINSE	1							
	Q221342000	REMACHE EXAGONAL M5	HEXAGONAL RIVET M5	4							
	Q032035000	TORNILLO ALOMADO M5x30	CURVED SCREW M5X30	2							
	Q232030000	ARANDELA A5	WASHER A5	2							
	Q012031000	TORNILLO EXAGONAL M5x10	HEXAGONAL BOLT M5x10	2							
17	Z258965000	BOMBA ACLARADO HANNING	RINSE PUMP	1							
18	Z258931000	MANGUITO REDUCCIÓN	REDUCTION HOSE	1							

MOD.	LAVAVAJILLAS DE APERTURA FRONTAL FRONT LOADING DISHWASHER	ZONA / ZONE	PARTE FUNCIONAL ACLARADO RINSE FUNCTIONAL PART	PLANO DIAGRAM	C-2726

ITEM	CODIGO CODE	DENOMINACION	NAME	AD-64 HY							
19	Z258925000	MANGUITO CONEXIÓN	CONNECTION HOSE	1							
	Q881306000	ABRAZADERA 32-50 L	CLAMP 32-50 L	2							
20	Z258916000	CALDERIN COMPLETO BBT	COMPLETE DRUM BBT	1							
21	3676900000	TUBO GOMA NEGRA Ø 17*10	BLACK RUBBER PIPE 17*10	1							
	Q881302000	ABRAZADERA 12-20	CLAMP 12-20	2							
22	3676900000	TUBO GOMA NEGRA Ø 17*10	BLACK RUBBER PIPE 17*10	1							
	Q881302000	ABRAZADERA 12-20	CLAMP 12-20	2							
23	Z208915000	DOSIFICADOR DGTE ABRILLANT.	DETERGENT DISPENSER RINS.	1							
S/Nº	Z203007000	CASQUILLO	BUSHING	2							
	Q041324000	TORN. AVELLA. M4x25 H.ZINCADO	COUNTERSUNK NUT M4x25 H.ZI	2							
24	Z701152000	PESO FILTRO	FILTER WEIGHT	1							
25	Z448614000	CONDUCTO ASPIRACIÓN	CONDUIT	1							
26	3699200000	CONDUCTO DOSIFICADOR 6X4	CONDUIT 6X4	1							
27	Z718949000	TE TOMA PRESION	PRESSURE INTAKE TE	1							
	Q881302000	ABRAZADERA 12-20	CLAMP 12-20	2							
28	3676900000	TUBO GOMA NEGRA Ø 17*10	BLACK RUBBER PIPE 17*10	1							
	Q881302000	ABRAZADERA 12-20	CLAMP 12-20	2							
29	Z701135000	ELECTR. SIMP.220V COD.255.208	SOLENOID VALVE SIMP.220V CO	1							
	Z601156000	REGULADOR 8L RO. 254.034	REGULATOR 8L RED 254.034	1							

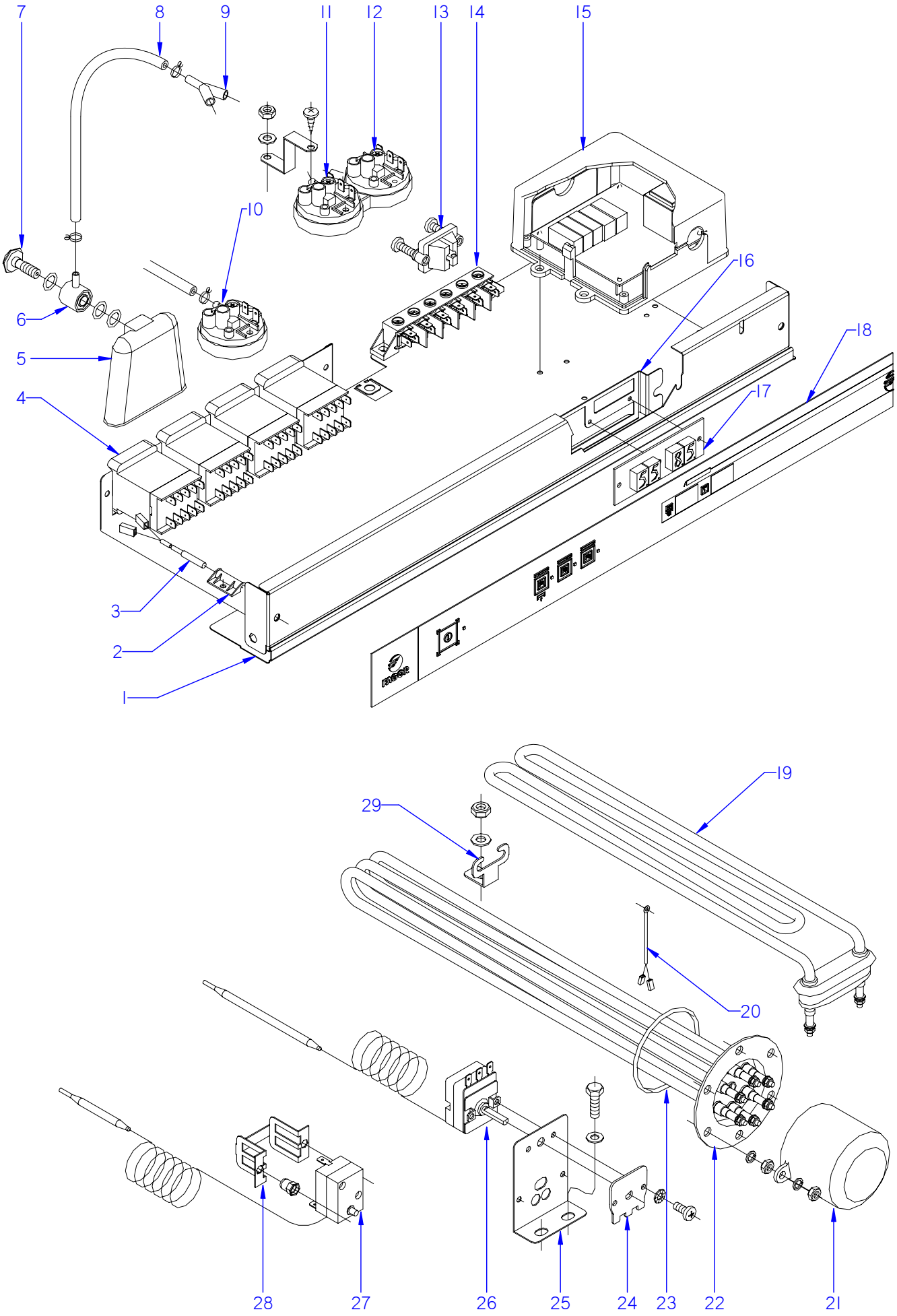

ITEM MARCADO EN COLOR = REPUESTO RECOMENDADO
COLOURED ITEM = RECOMMENDED SPARE PART

N plano	Firma	Fecha	Aparato	PARTE FUNCIONAL ELECTRICA / ELECTRICS FUNCTIONAL PART	Lamina	
C-2727		2010-11	LAVAVAJILLAS AD-64 HY		6	Fagor Industrial S.Coop. FAGOR Oñate

MOD.	LAVAVAJILLAS DE APERTURA FRONTAL FRONT LOADING DISHWASHER	ZONA / ZONE	PARTE FUNCIONAL ELECTRICA ELECTRICS FUNCTIONAL PART	PLANO DIAGRAM	C-2727

ITEM	CODIGO CODE	DENOMINACION	NAME	AD-64 HY							NOTAS
1	Z202930000	FRENTE COMPLETO AD	COMPLETE FRONT AD	1							
2	Z203010000	AMARRE INTERRUP. MAGNETICO	MAGNETIC SWITCH FASTENER	1							
	Q152004000	TORNILLO APLASTADO M5x13 A304	FLAT HEADED BOLT M5x13 A30	1							
	Q162030000	TUERCA EXAGONAL M5	HEXAGONAL NUT M5	1							
3	Z203009000	INTERRUPTOR MAGNETICO	MAGNETIC SWITCH	1							
4	Z213007000	CONTACTOR 230 V. 50-60 HZ	CONTACTOR 230 V. 50-60 HZ	4							
5	Z203011000	CAMARA PRESOSTATO	PRESSURE SWITCH	1							
6	Z203012000	EMPALME PRESOSTATO	PRESSURE SWITCH CONNEX	1							
7	Z203013000	TORNILLO PRESOSTATO	PRESSURE SWITCH BOLT	1							
	Q307003000	JUNTA TORICA 16.01X10.77X2.62	O-RING 16.01X10.77X2.62	3							
8	3702400000	TUBO GOMA NEGRO D 8*4	BLACK RUBBER PIPE Ø 8*4	1							
	P102154000	BRIDA ELASTICA TUBO	ELASTIC PIPE FLANGE	2							
S/Nº	Z203095000	MUELLE COMPRESION 13-600-1.5	COMPRES. SPRING 13-600-1.5	1							
9	Z103077000	RACORD EN Y	Y CONNECTION	1							
10	Z713002000	PRESOSTATO SIMPLE	SIMPLE PRESSURE SWITCH	1							
11	Z203023000	PRESOSTATO SIMPLE PVS	SIMPLE PRESSURE SWITCH	1							
12	Z223005000	PRESOSTATO SIMPLE P.V.S.	SIMPLE PRESSURE SWITCH	1							
S/Nº	Z602923000	SOPORTE PRESOSTATO	PRESSURE SWITCH SUPPORT	1							
	Q082032000	TORNILLO ALOMADO BZ-3,5X9,5	ALOM. BOLT BZ-3,5X9,5	1							
	Q152004000	TORNILLO APLASTADO M5x13 A304	FLAT HEADED BOLT M5x13 A30	1							
	Q232030000	ARANDELA A5	WASHER A5	1							
	Q162030000	TUERCA EXAGONAL M5	HEXAGONAL NUT M5	1							
13	Z203020000	RETENEDOR DE CABLE	CABLE HOLDER	1							
14	R253044000	REGLETA AUXILIAR FV-122	AUXILIARY STRIP FV-122	1							
	Z213005000	ROTULO ADHESIVO	ADHES. LABEL	1							
	Q152004000	TORNILLO APLASTADO M5x13	FLAT HEADED BOLT M5x13 A30	2							
	Q232030000	ARANDELA A5	WASHER A5	2							
	Q162030000	TUERCA EXAGONAL M5	HEXAGONAL NUT M5	2							
15	Z213069000	TARJETA 5 RELES GICAR	CHAMBER 5 RELAY GICAR	1							
	Q242020000	ARANDELA ABANICO A5 A.304	FAN WASHER A4 A.304	4							
	Q042022000	TORN. AVELLANADO M4X15	COUNTERSUNK BOLT M4X15	4							

MOD.	LAVAVAJILLAS DE APERTURA FRONTAL FRONT LOADING DISHWASHER	ZONA / ZONE	PARTE FUNCIONAL ELECTRICA ELECTRICS FUNCTIONAL PART	PLANO DIAGRAM	C-2727

ITEM	CODIGO CODE	DENOMINACION	NAME	AD-64 HY							NOTAS
16	Z203088000	SOPORTE COMPONENTES	COMPON. SUPPORT	1							
	T133007000	DISTANCIADOR M3	M3 SPACER	3							
	T133008000	TORNILLO AMARRE M3	CLAMPING SCREW M3	3							
	Q162010000	TUERCA EXAGONAL M3	HEXAGONAL NUT M3	3							
	Q242010000	ARANDELA ABANICO A3 A.304	FAN WASHER A3 A.304	2							
	Q162030000	TUERCA EXAGONAL M5	HEXAGONAL NUT M5	2							
17	Z713017000	DISPLAY GICAR TEMPERATURAS	DISPLAY GICAR	1							
18	Z217401000	EMBELLEC. ADHESIVO AD-48-64 HY	ADHES. TRIM AD-48-64 HY	1							
19	Z203601000	RESISTENCIA TANQUE	TANK RESISTOR	1							
20	Z713028000	SONDA TEMPERATURA GICAR	TEMPERATURA PROBE GICAR	1							
21	Z101723000	CAPERUZA RESISTENC. CALDERIN	BOILER RESIST. CAP	1							
	Q163140000	TUERCA EXAGONAL M6 LATON	HEXAGONAL NUT M6 BRASS	2							
	Q242030000	ARANDELA ABANICO A5 A.304	FAN WASHER A5 A.304	2							
	Q152004000	TORNILLO APLASTADO M5x13 A304	FLAT HEADED BOLT M5x13 A30	2							
22	Z241701000	RESISTENCIA CALDERIN	BOILER RESISTOR	1							
	Q221305000	TUERCA EXAGONAL M4 ZINCADA	HEXAGONAL NUT M4 ZIN.	2							
	Q163140000	TUERCA EXAGONAL M6 LATON	HEXAGONAL NUT M6 BRASS	5							
	Q262040000	ARANDELA GROW. A6 A.304	WASHER GROW. A6 A.304	5							
23	Q307035000	JUNTA TORICA AN-36 282333	"O" RING AN-36 282333	1							
24	Z718446000	CHAPA W 85ºC	W 85ºC PLATE	1							
25	Z203047000	SOPORTE TERMOSTATOS	THERMOSTAT SUPPORT	1							
	Q012031000	TORNIL. EXAGONAL M5X10 A.304	HEXAGONAL BOLT M5X10	2							
	Q232030000	ARANDELA A5	HEXAGONAL NUT M5	2							
26	Z203014000	TERMOSTATO CALDERIN	WASH DRUM THERMOSTAT	2							
27	Z213014000	LIMITADOR TECASA P.	TECASA P. LIMITER	1							
28	Z203060000	AMARRE LIMITADOR TECASA	LIMITER FASTENING	1							
	Q221341000	REMACHE EXAGONAL M4	HEXAGONAL RIVET M4	2							
	Q152024000	TORNIL. AVELLANADO M4X8 A304	COUNTERSUNK BOLT M4x8	2							
29	Z603602000	SOPORTE RESISTENCIA TANQUE	TANK RESISTOR SUPPORT	1							
	Q232040000	ARANDELA A6	WASHER A6	1							
	Q162040000	TUERCA EXAGONAL M6	HEXAGONAL NUT M6	1							

MOD.	LAVAVAJILLAS DE APERTURA FRONTAL FRONT LOADING DISHWASHER	ZONA / ZONE	VARIOS / MISCELLANEOUS	PLANO DIAGRAM	

ITEM	CODIGO CODE	DENOMINACION	NAME	AD-64 HY							NOTAS
	Z246133000	FOLLETO INSTRUCCIONES AD-64	INSTRUCTION LEAFLET. AD-64	1							
	Z243052000	ESQUEMA TEORICO AD-64	THEORETICAL DIAGRAM AD-64	1							PLANO HC-18216
	Z243053000	PLANO DE MONTAJE AD-64	ASSEMBLY DIAGRAM AD-64	1							PLANO HC-18217
	Z243051000	LEYENDA LAVAVAJILLAS DE AP. F.	FRONT LOADING DISH. LEGEN	1							PLANO HC-17400
	Z213064000	INSTALACION ELECTRICA AD-48	ELEC. INSTALATION AD-48	1							
	Z203094000	CABLE DE ALIMENTACION 2,5	SUPPLY CABLE 2,5	1							
	Z213063000	CABLEADO CONEXIÓN SONDAS	PROBE CONNECTION WIRING	1							
	Z713021000	CABLE CONEXION PLACA-DISPLAY	DISPLAY CONNECTI. WIRING	1							
	Z208917000	CABLEADO DD-DA G650	DD-DA G650 WIRING	1							

AD 72, AD 72 W, AD 64, AD 64 AR+DD, AD 64 B, AD 64 BA, AD 64 B BT, AD 64 C, AD 64 D, AD 64 HY, AD 64 W

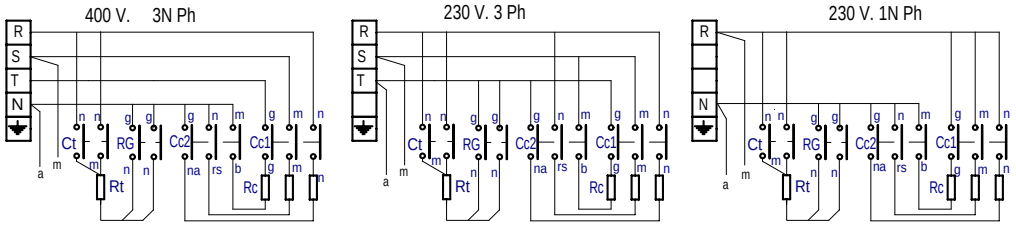

AD 48, AD 48 AR+DD, AD 48 B, AD 48 BA, AD 48 B BT, AD 48 C, AD 48 D, AD 48 HY, AD 48 W

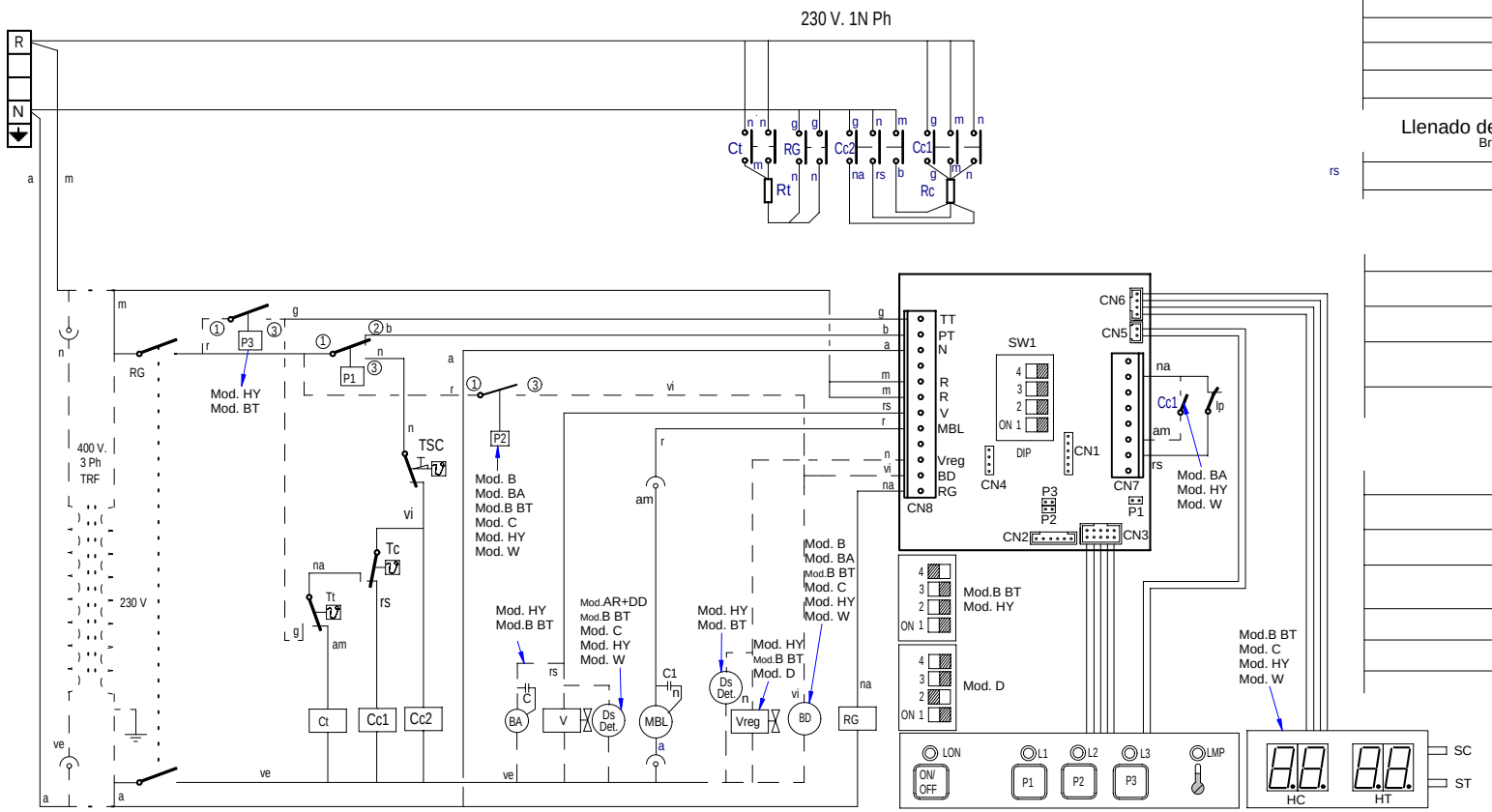

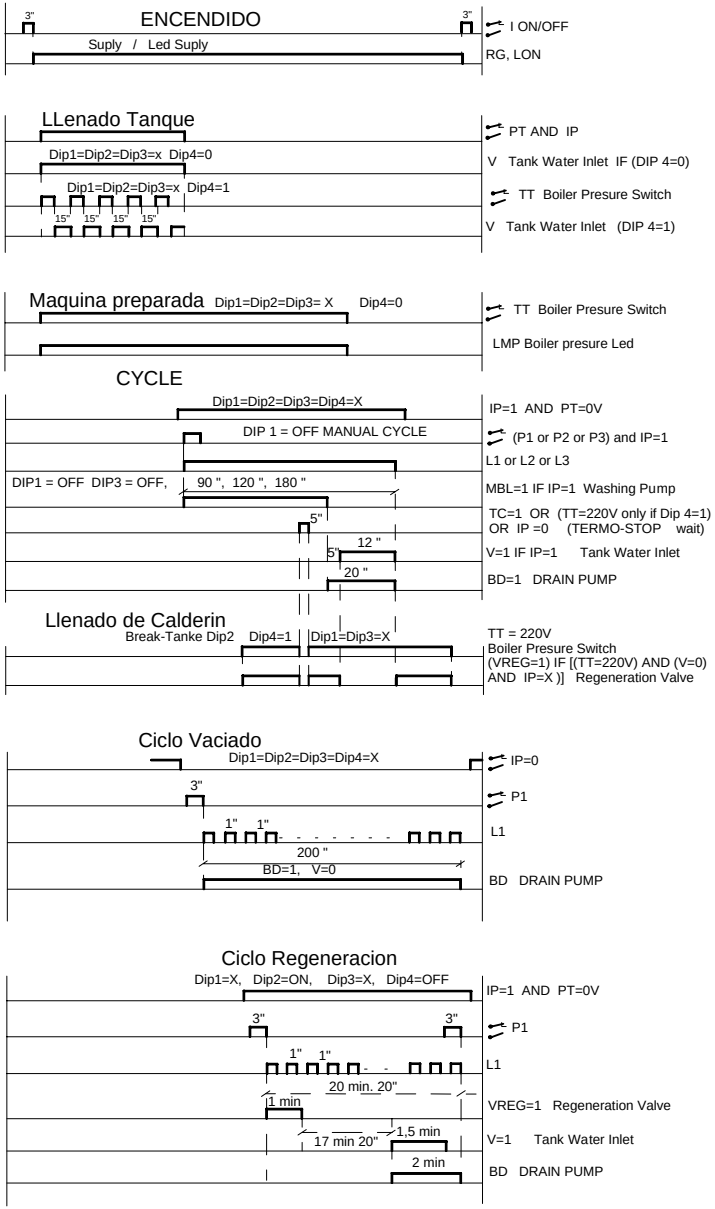

Z203090000

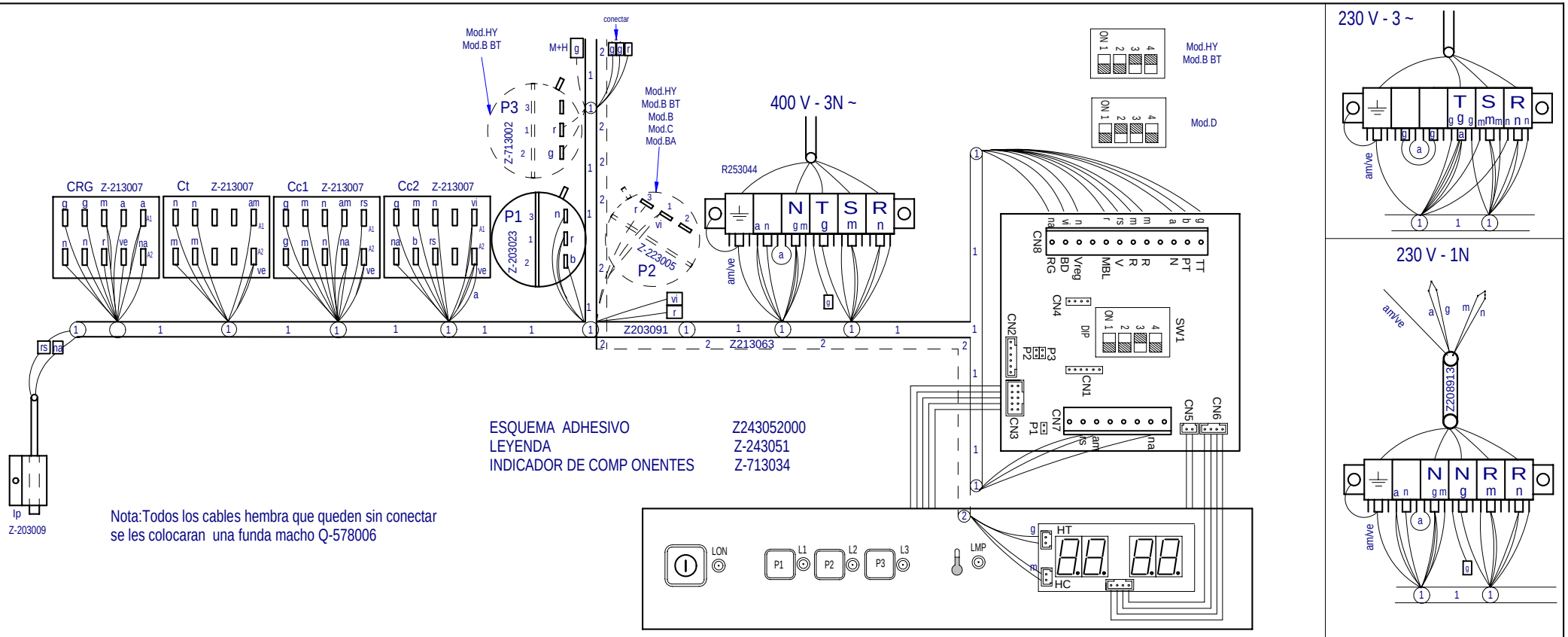

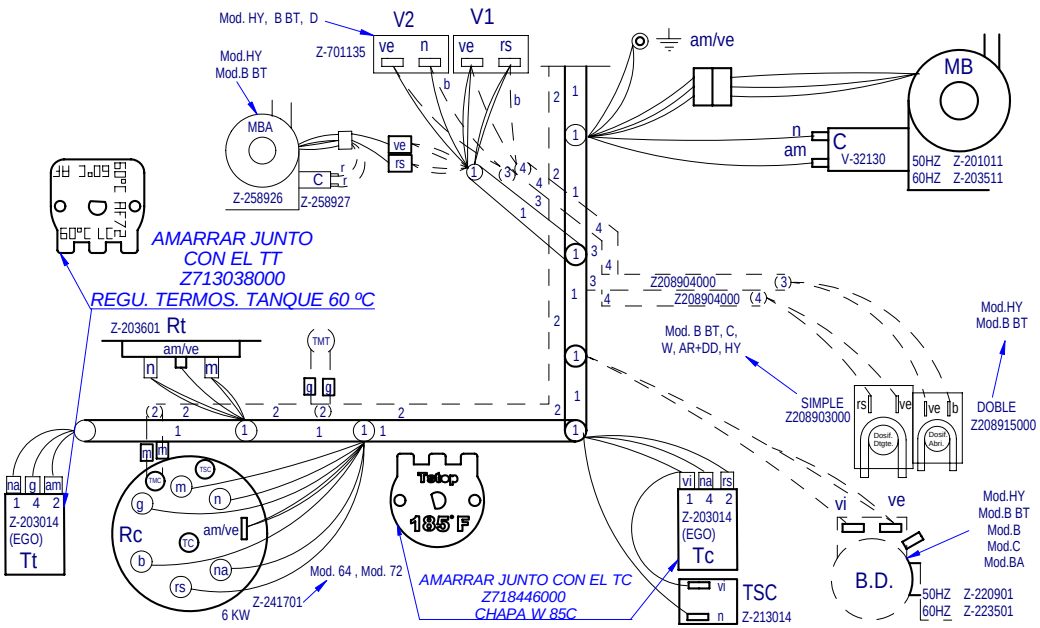

	Plano montaje L.A.F. AD 64 GICAR		Z243053000		
Nº	Pieza	Material	Nº Clasificacion	Acabado	
Nº	Modificacion	Propuesta de	Fecha	Tolerancias generales	
				<5±	50–100± :
				5–25± :	>100±
				25–50± :	∝±

	Firma	Fecha
Dibujado	M.Maillo	28-05-2009
Proyectado	M.Maillo	28-05-2009
Comprobado	Z.Altube	28-05-2009
Escala		

FAGOR

Fagor Industrial,Koop.Elk, Mugatua

Mecanizado superficial

LAVAVAJILLAS

Plano hau ez daiteke erabil ez berrizta gure baimenitz gabe

Plano numero HC-18217 - 00

Sustituye al Nº

Sustituido por

LEYENDA APERTURA FRONTAL

	ESPAÑOL	FRANÇAIS	ENGLISH	DEUTSCH	ITALIANO
BD	Bomba desagüe	Pompe de vidange	Drain pump	Abflußpumpe	Pompa scarico
C 1/2/3	Condensador	Condensateur	Condenser	Kondensator	Condensatore
CMB	Contactor bomba lavado	Contacteur pompe lavage	Wash pump contactor	Kontaktschütz Waschpumpe	Contattore pompa lavaggio
Cc 1/2	Contactor calentamiento calderin	Contacteur chauf. surchauffeur	Boiler heating contactor	Kontaktschütz Boilerheizung	Contattore riscaldamento boiler
Ct	Contactor calentamiento tanque	Contacteur chaufage cuve	Tank heating contactor	Kontaktschütz Heizung Tank	Contattore riscaldamento serbatoio
CP	Rele puerta	Relais porte	Door relay	Türrelais	Rele porta
Ds.Det.	Dosificador detergente	Dosseur de detergent	Detergent doser	Dosierer Spülmittel	Dosatore detersivo
E.B	Electrobomba de presion	Electropompe de pression	Electric pressure pump	Elektro-Drucksteigungspumpe	Electropompa pressione
IG	Interruptor general	Interrupteur general	Main switch	Hauptschalter	Interruttore generale
IP	Micro puerta	Micro porte	Door microswitch	Mikroschalter Tür	Micro porta
L1	Piloto de encendido	Voyant funcionement	Operation light	Betriebsanzeigelampe	Spia accensione
L2	Piloto marcha	Voyant demarrage	Start light	Startanzeigelampe	Spia avvio
L3	Piloto maquina preparada	Voyant machine prêt	Light machine ready	Betriebsbereitschaftsanzeigelampe	Pilota macchina preparata
MBL	Bomba lavado	Pompe lavage	Wash pump	Waschpumpe	Pompa lavaggio
M	Motor programador	Moteur du programmateur	Motor programmer	Motor Programmiervorrichtung	Motore programmatore
M Av. R	Motor program. avance rapido	Moteur du progr.avance rapide	Motor program. rapid advance	Motor Programmiervorrich. schneller Vorlauf	Motore programmatore avanzamento rapido
M1	Micro programador marcha	Micro du programm. de marche	Micro programmer on	Motor Programmiervorrich. Betrieb	Micro programma. di funzionamento
M2	Micro programador lavado	Micro du programm. de lavage	Micro programmer wash	Motor Programmiervorrich. Waschen	Micro programmatore di lavaggio
M3	Micro programador aclarado	Micro du programm. de rinçage	Micro programmer on	Motor Programmiervorrich. Spülen	Micro programmatore di risciacquo
M4	Micro programador Termo-stop	Micro du programm. Termo-stop	Micro programmer Termo-stop	Motor Programmiervorrich. Thermo-Stop	Micro programmatore Termo-stop
M5	Micro programador avance	Micro du programm. avance	Micro programmer advance	Motor Programmiervorrich. Vorlauf	Micro programmatore avanzamento
P, P1, P5	Presostato	Pressostat	Pressure switch	Druckwächter	Pressostato
P2, P3, P4	Presostato limitador	Pressostat de securité	Hi-limit pressure switch	Begrenzer Druckwächter	Pressostato limitatore
RC	Resistencia calderin	Resistance surchauffeur	Boiler heating element	Heizwiderstand Boiler	Resistenza boiler
RT	Resistencia tanque	Resistance cuve	Tank heater	Heizwiderstand Tank	Resistenza serbatoio
Tt	Termostato tanque	Thermostat de cuve	Tank thermostat	Thermostat Tank	Termostato serbatoio
TC	Termostato calderin	Thermostat surchauffeur	Boiler thermostat	Thermostat kessel	Termostato boiler
TSC	Limitador calderin	Limiteur surchauffeur	Boiler Hi-limit	Begrenzer Boiler	Limitatore boiler
TSTP	Termostato termo-stop	Thermostat Termo-stop	Termo-stop Thermostat	Thermostat Termo-stop	Termostato Termo-stop
V	Electrovalvula llenado y aclarado	Electrovan. remplissage rinçage	Fill and rinse valve	Elektroventil Füllen und Spülen	Elettroval. riempimento e risciacquo
COLOR	COLORES	COULEURS	COLOUR	FARBEN	COLORE
a =	Azul	Bleu	Blue	Blau	Blu
am =	Amarillo	Jaune	Yellow	Gelb	Giallo
am/ve =	Amarillo/verde	Jaune / vert	Yellow / green	Gelb/grün	Giallo/verde
b =	Blanco	Blanc	White	Weiß	Bianco
g =	Gris	Gris	Grey	Grau	Grigio
m =	Marrón	Marron	Brown	Braun	Marrone
n =	Negro	Noir	Black	Schwarz	Nero
na =	Naranja	Orange	Orange	Orange	Arancio
r =	Rojo	Rouge	Red	Rot	Rosso
rs =	Rosa	Rose	Pink	Rosa	Roseo
ve =	Verde	Vert	Green	Grün	Verde
vi =	Violeta	Violet	Purple	Violett	Viola

Z243051000