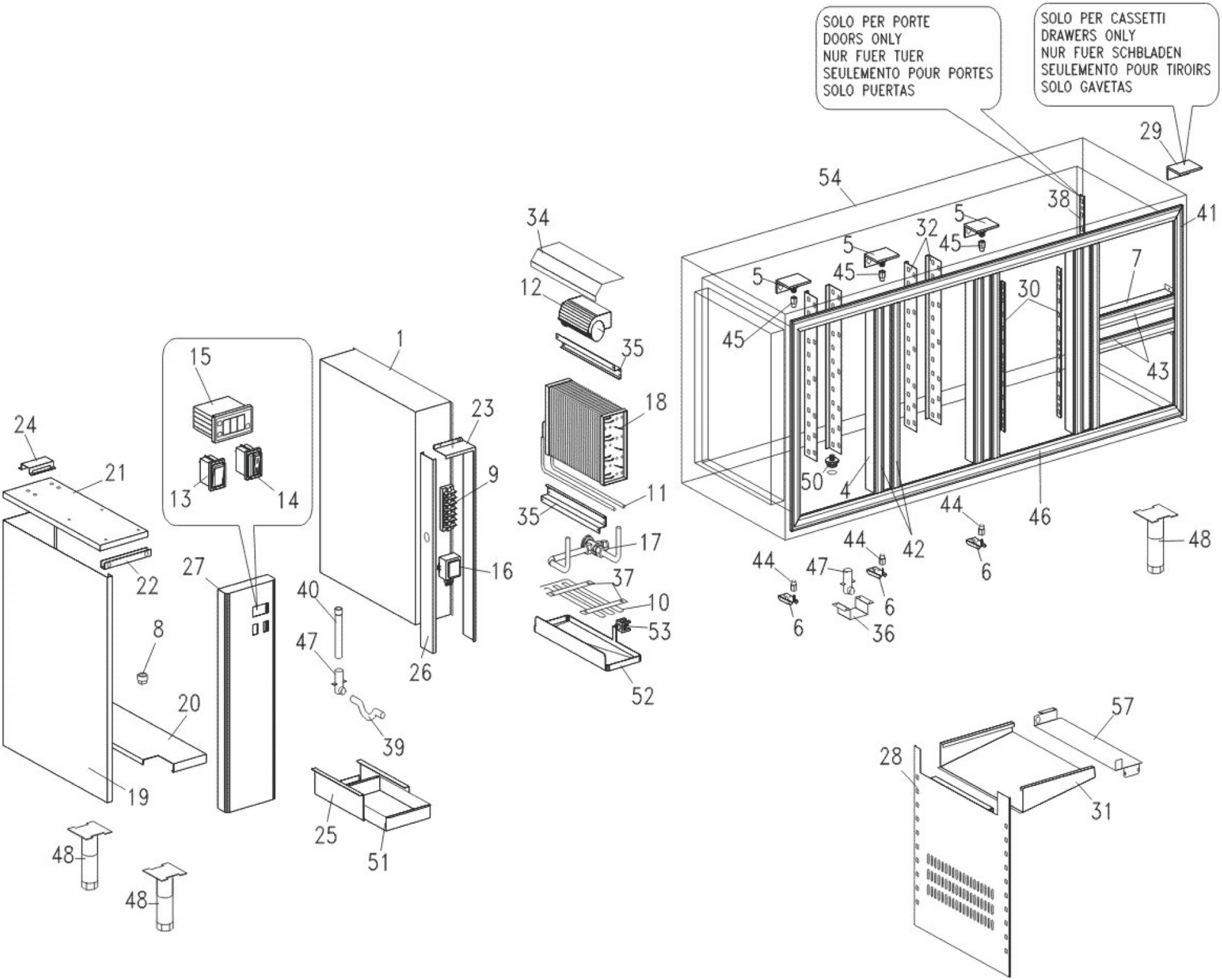
SOLO PER PORTE
DOORS ONLY
NUR FUER TUER
SEULEMENTO POUR PORTES
SOLO PUERTAS
SOLO PER CASSETTI
DRAWERS ONLY
NUR FUER SCHBLADEN
SEULEMENTO POUR TIROIRS
SOLO GAVETAS
1
4
5
6
7
8
9
10
11
12
13
14
15
16
17
18
19
20
21
22
23
24
25
26
27
28
29
30
31
32
34
35
36
37
38
39
40
41
42
43
44
45
46
47
48
50
51
52
53
54
57

# Modello Typ Model Modele Modelo

| | | WM1A<br>WM1A/X<br>WM1A/A | WM1A/2<br>WM1A/2X<br>WM1A/2A | WM1B<br>WM1B/X<br>WM1B/A | WM1B/2<br>WM1B/2X<br>WM1B/2A | WM1B/4<br>WM1B/4X<br>WM1B/4A | WM1C<br>WM1C/X<br>WM1C/A | WM1C/2<br>WM1C/2X<br>WM1C/2A | WM1C/4<br>WM1C/4X<br>WM1C/4A | WM1C/6<br>WM1C/6X<br>WM1C/6A |
|---|---|---|---|---|---|---|---|---|---|---|
| Num. Cassetti<br>Schublad<br>Drawers<br>Tiroirs<br>Gabetas | 1/2 | --- | 2 | --- | 2 | 4 | --- | 2 | 4 | 6 |
| | 1/3 | --- | --- | --- | --- | --- | --- | --- | --- | --- |
| | 2/3 | --- | --- | --- | --- | --- | --- | --- | --- | --- |

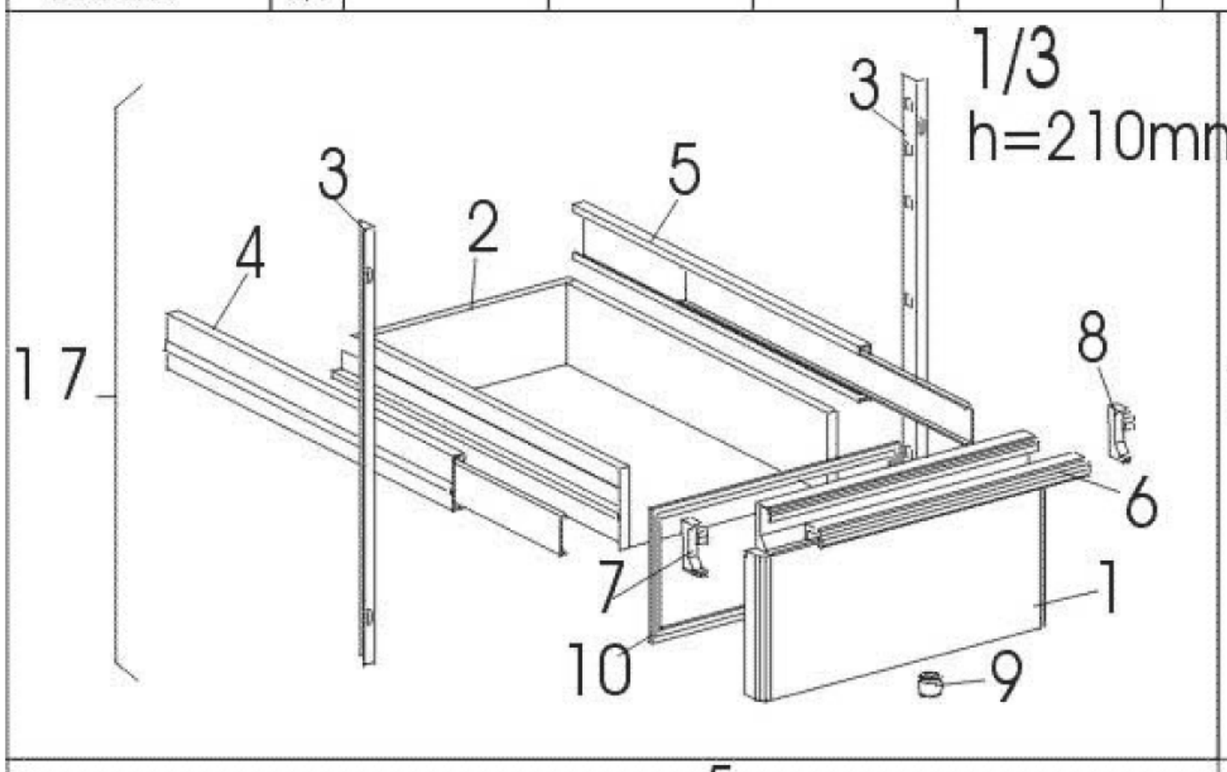


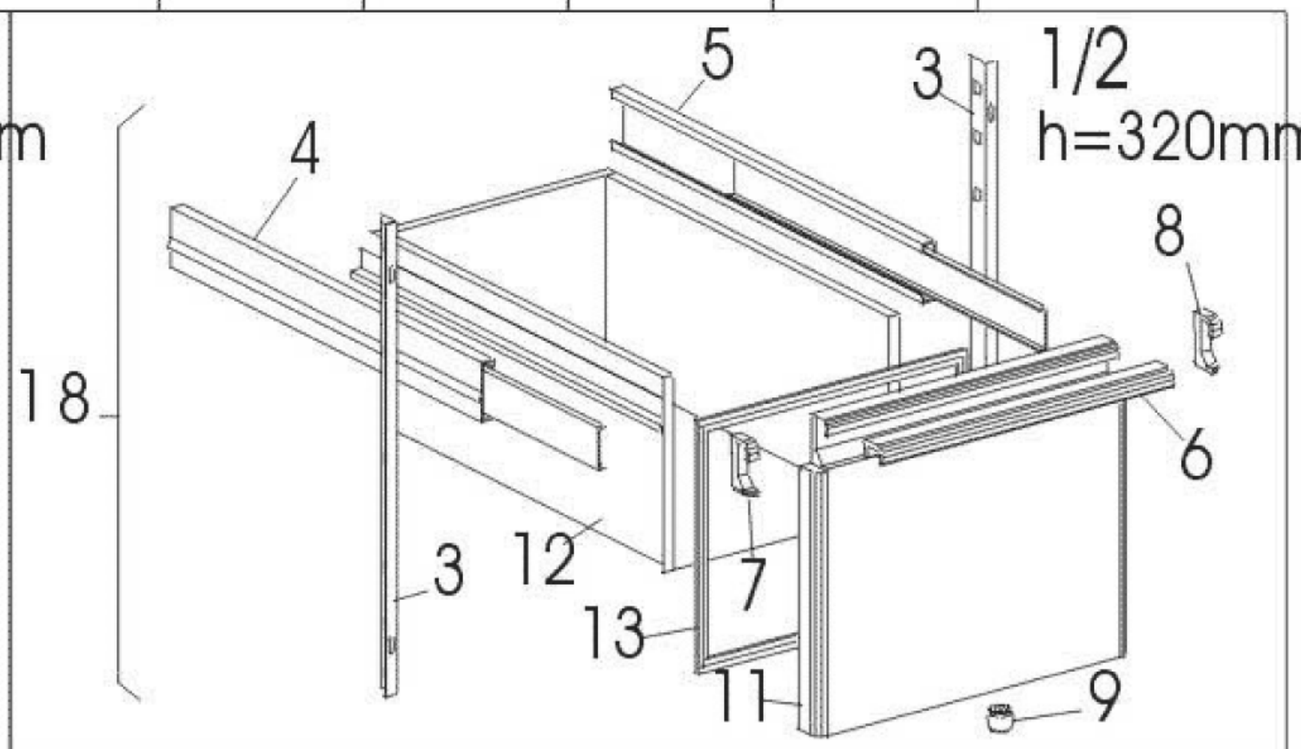


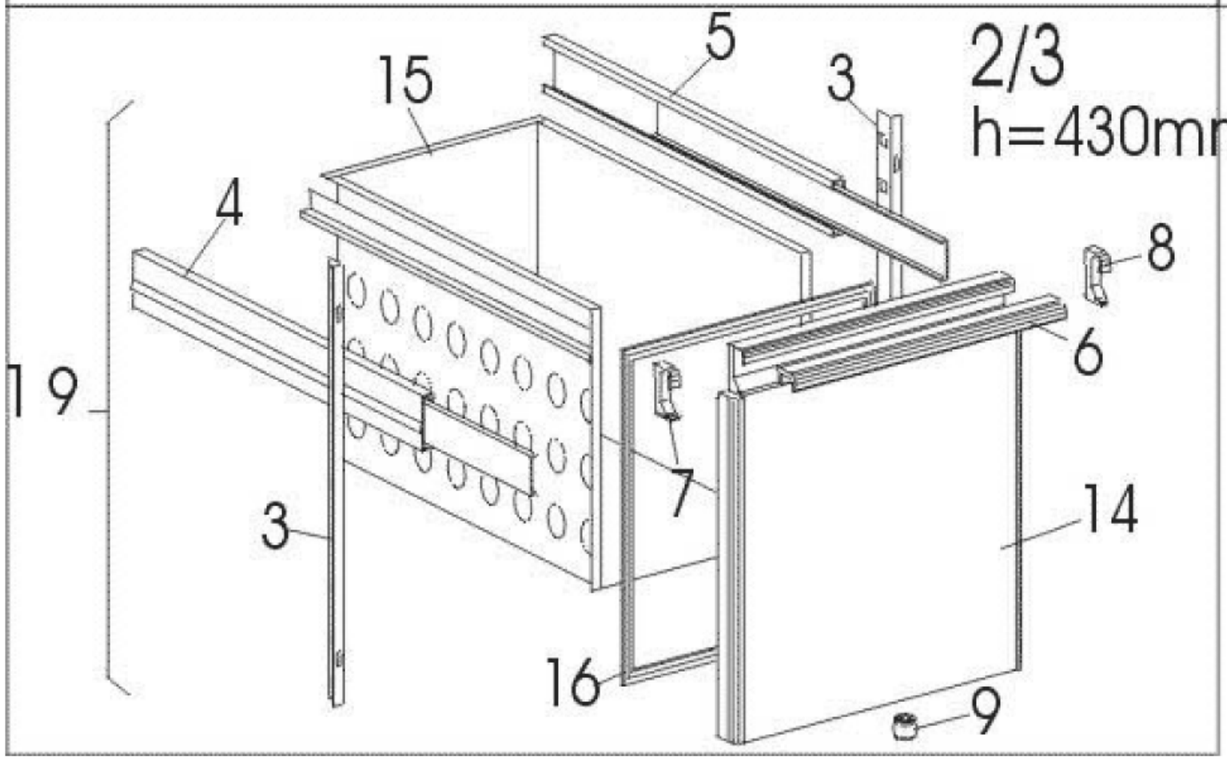

# Modello Typ Model Modele Modelo

| | | WM1A<br>WM1A/X<br>WM1A/A | WM1A/2<br>WM1A/2X<br>WM1A/2A | WM1B<br>WM1B/X<br>WM1B/A | WM1B/2<br>WM1B/2X<br>WM1B/2A | WM1B/4<br>WM1B/4X<br>WM1B/4A | WM1C<br>WM1C/X<br>WM1C/A | WM1C/2<br>WM1C/2X<br>WM1C/2A | WM1C/4<br>WM1C/4X<br>WM1C/4A | WM1C/6<br>WM1C/6X<br>WM1C/6A |
|---|---|---|---|---|---|---|---|---|---|---|
| Porte<br>Ture<br>Doors<br>Portes<br>Portas | SX | 1 | 1 | 2 | 2 | 1 | 3 | 3 | 2 | 1 |
| Gabetas | DX | 1 | --- | 1 | --- | --- | 1 | --- | --- | --- |

