DESPIECE TECNICO

Cocinas a Gas
Fourneaux à Gaz
Gas Ranges
Cucine a Gas
Fogões a Gás
Gas-Herde

GAMA SNACK

Modelos:

CG6-20
CG6-40
CG6-41

Junio 2009 June

Revisado Abril 2010

Fagor Industrial

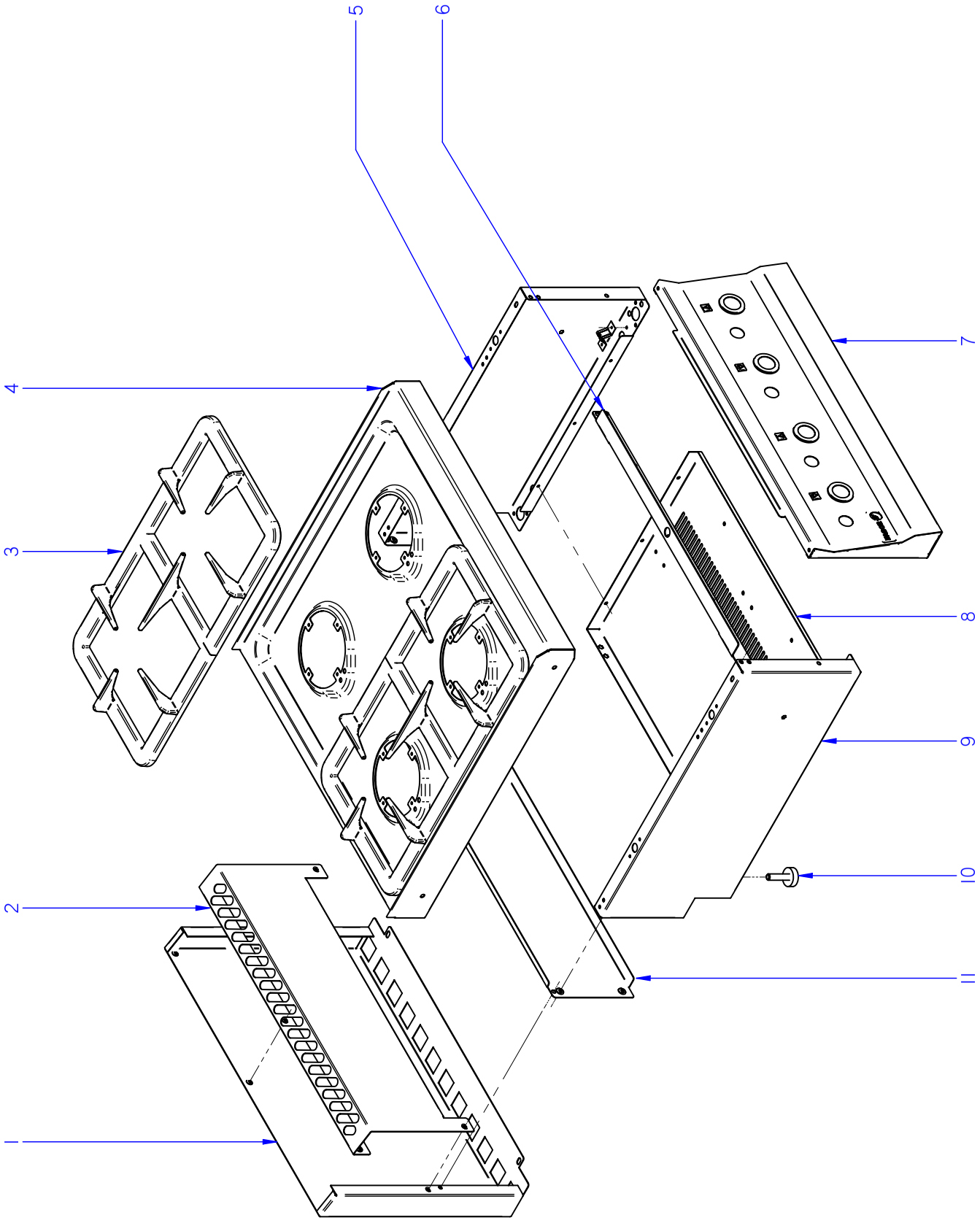

ITEM MARCADO EN COLOR = REPUESTO RECOMENDADO
COLOURED ITEM = RECOMMENDED SPARE PART

N plano	Firma	Fecha	Aparato	Lamina	
C-2371		2009-06	MUEBLE COCINAS CG6-20 / CG6-40	1	Fagor Industrial S.Coop. Oñate

MOD.	COCINAS	ZONA	MUEBLE	PLANO	C-2371

ITEM	CODIGO	DENOMINACION	TEXTO	CG6-20	CG6-40						NOTAS
1	J142809000	PROTECCION CHIMENEA POS. 400	PROTECTION CHIMEMEY POS.	1	_						
1	J142812000	PROTECCION CHIMENEA POS. 600	PROTECTION CHIMEMEY POS.	_	1						
	Q419005000	REMACHE 4X8 ALMG3 / ALUMINIO	RIVET 4X8 ALMG3 / ALUMINIUM	2	2						
2	J142810000	PROTECCION CHIMENEA ANT. 400	PROTECTION CHIMENEY ANT	1	_						ELIMINADA 01.04.2010
2	J142829000	PROTECCION CHIMENEA FREID.	PROTECTION CHIMENEY	1	_						INTRODUC. 01.04.2010
2	J142813000	PROTECCION CHIMENEA ANT. 600	PROTECTION CHIMENEY ANT	_	1						ELIMINADA 01.04.2010
2	J142830000	PROTECCION CHIMENEA ANT. 600	PROTECTION CHIMENEY ANT	_	1						INTRODUC. 01.04.2010
	Q012031000	TORNILLO EXAGONAL M5x10 A304	HEXAGONAL BOLT M5x10 A304	4	4						
	Q302022000	ARANDELA 16x6x1,2 A304	WASHER 16x6x1.2 A304	4	4						
	Q221342000	REMACHE EXAGONAL M5	HEXAGONAL RIVET M5	3	3						
3	J015405000	PARRILLA SNACK	PARRILLA SNACK	1	2						
4	J015410000	ENCIMERA CG6-20 COMPL.	TOP CG6-20 COMPL.	1	_						
4	J015411000	ENCIMERA CG6-40 COMPL.	TOP CG6-40 COMPL.	_	1						
	Q221342000	REMACHE EXAGONAL M5	HEXAGONAL RIVET M5	4	4						
	X012612000	PITON CIERRE	LOCK SPIKE	2	4						ELIMINADA 01.04.2010
	Z442919000	PITON CIERRE	LOCK SPIKE	2	4						INTRODUC. 01.04.2010
	Q221342000	REMACHE EXAGONAL M5	HEXAGONAL RIVET M5	2	2						
5	J002802000	PANEL LATERAL DERECHO	RIGHT SIDE PANEL	1	1						ELIMINADA 01.04.2010
5	J002834000	PANEL LATERAL DERECHO	RIGHT SIDE PANEL	1	1						INTRODUC. 01.04.2010
	Q221342000	REMACHE EXAGONAL M5	HEXAGONAL RIVET M5	1	1						
	Q419007000	REMACHE TUBULAR C/V D3.2X6	TUBULAR RIVET C/V D3.2X6	8	8						
	X010503000	CIERRE MUELLE	LOCK SPRING	4	4						ELIMINADA 01.04.2010
	Z442918000	CLIP CIERRE	LOCK SPRING	4	4						INTRODUC. 01.04.2010
6	J002610000	GUÍA PANEL PORTAMANDOS	GUIDE PANEL OF CONTROLS	1	_						
6	J002612000	GUÍA PANEL PORTAMANDOS 600	GUIDE PANEL OF CONTROLS	_	1						
	Q221342000	REMACHE EXAGONAL M5	HEXAGONAL RIVET M5	4	4						
	Q012031000	TORNILLO EXAGONAL M5x10 A304	HEXAGONAL BOLT M5x10 A304	4	4						

MOD.	COCINAS	ZONA	MUEBLE	PLANO	C-2371

ITEM	CODIGO	DENOMINACION	TEXTO	CG6-20	CG6-40						NOTAS
7	J012802000	PORTAMANDOS COMPL. CG6-20	CONTROL HOLDER CG6-20	1	_						
7	J012804000	PORTAMANDOS COMPL. CG6-40	CONTROL HOLDER CG6-40	_	1						
	U022836000	ESCUDO FAGOR	FAGOR EMBLEM	1	1						
	Q221023000	CLIP SUJECIÓN RÁPIDA Ø5	RAPID CONNECT CLIP Ø5	2	2						
	Q419005000	REMACHE 4x8 ALMG3 / ALUMINIO	RIVET 4X8 ALMG3 / ALUMINIUM	6	6						
	Q012031000	TORNILLO EXAGONAL M5x10 A304	HEXAGONAL BOLT M5x10 A304	2	2						
	Q302022000	ARANDELA 16x6x1,2 A304	WASHER 16x6x1.2 A304	2	2						
8	J002604000	BASE INFERIOR 400	LOWER BASE 400	1	_						
8	J002607000	BASE INFERIOR 600	LOWER BASE 600	_	1						
	Q419005000	REMACHE 4x8 ALMG3 / ALUMINIO	RIVET 4X8 ALMG3 / ALUMINIUM	6	6						
9	J002801000	PANEL LATERAL IZQUIERDO	LEFT SIDE PANEL	1	1						ELIMINADA 01.04.2010
9	J002833000	PANEL LATERAL IZQUIERDO	LEFT SIDE PANEL	1	1						INTRODUC. 01.04.2010
	Q221342000	REMACHE EXAGONAL M5	HEXAGONAL RIVET M5	1	1						
	Q419007000	REMACHE TUBULAR C/V D3.2X6	TUBULAR RIVET C/V D3.2X6	8	8						
	X010503000	CIERRE MUELLE	LOCK SPRING	4	4						ELIMINADA 01.04.2010
	Z442918000	CLIP CIERRE	LOCK SPRING	4	4						INTRODUC. 01.04.2010
10	Z200107000	PATA REGULABLE	ADJUSTABLE LEG	4	4						
11	J002803000	PANEL POSTERIOR 400	REAR PANEL 400	1	_						
11	J002804000	PANEL POSTERIOR 600	REAR PANEL 600	_	1						
	Q419005000	REMACHE 4x8 ALMG3 / ALUMINIO	RIVET 4X8 ALMG3 / ALUMINIUM	4	4						

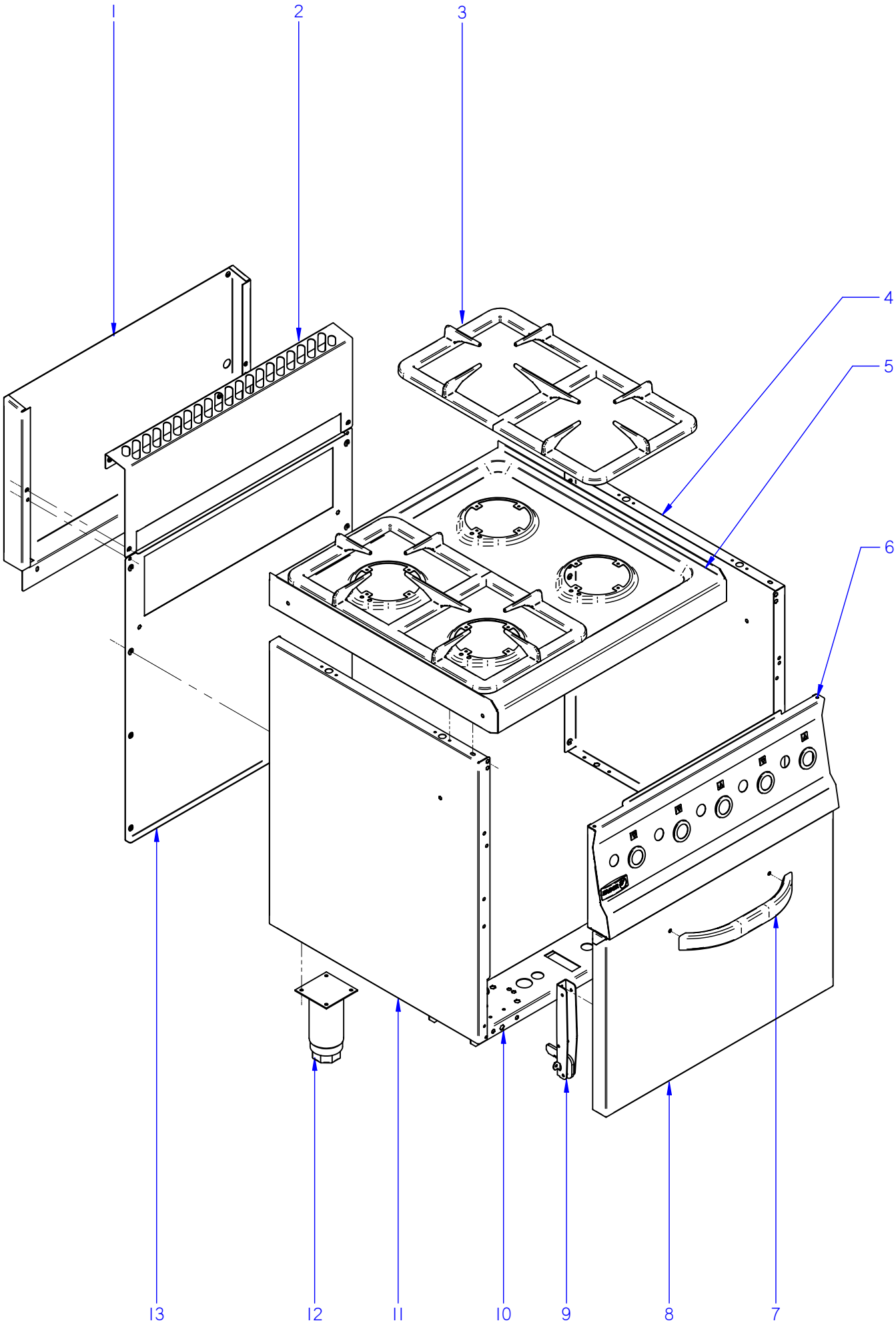

ITEM MARCADO EN COLOR = REPUESTO RECOMENDADO
COLOURED ITEM = RECOMMENDED SPARE PART

N plano	Firma	Fecha	Aparato	MUEBLE	Lamina	
C-2372		2009-06	COCINA CG6-41		2	Fagor Industrial S.Coop. FAGOR Oñate

MOD.	COCINAS	ZONA	MUEBLE	PLANO	C-2372

ITEM	CODIGO	DENOMINACION	TEXTO	CG6-41							NOTAS
1	J042801000	PROTECCION CHIMENEA POST.	PROTECTION CHIMEMEY POS.	1							
	Q419005000	REMACHE 4X8 ALMG3 / ALUMINIO	RIVET 4X8 ALMG3 / ALUMINIUM	2							
2	J142813000	PROTECCION CHIMENEA ANT. 600	PROTECTION CHIMENEY ANT	1							ELIMINADA 01.04.2010
2	J142830000	PROTECCION CHIMENEA ANT. 600	PROTECTION CHIMENEY ANT	1							INTRODUC. 01.04.2010
	Q012031000	TORNILLO EXAGONAL M5x10 A304	HEXAGONAL BOLT M5x10 A304	4							
	Q302022000	ARANDELA 16x6x1,2 A304	WASHER 16x6x1.2 A304	4							
3	J015405000	PARRILLA SNACK	PARRILLA SNACK	2							
4	J022802000	PANEL LATERAL DCHO CG6-41	LATERAL RIGHT RANGE CG6-41	1							ELIMINADA 01.04.2010
4	J022816000	PANEL LATERAL DCHO CG6-41	LATERAL RIGHT RANGE CG6-41	1							INTRODUC. 01.04.2010
	Q419005000	REMACHE 4X8 ALMG3 / ALUMINIO	RIVET 4X8 ALMG3 / ALUMINIUM	4							
	X010503000	CIERRE MUELLE	LOCK SPRING	2							ELIMINADA 01.04.2010
	Z442918000	CLIP CIERRE	LOCK SPRING	2							INTRODUC. 01.04.2010
	Q419007000	REMACHE TUBULAR C/V D3.2X6	TUBULAR RIVET C/V D3.2X6	4							
	Q221342000	REMACHE EXAGONAL M5	HEXAGONAL RIVET M5	1							
5	J015411000	ENCIMERA CG6-40 COMPL.	TOP CG6-40 COMPL.	1							
	Q221342000	REMACHE EXAGONAL M5	HEXAGONAL RIVET M5	4							
	X012612000	PITON CIERRE	LOCK SPIKE	2							ELIMINADA 01.04.2010
	Z442919000	PITON CIERRE	LOCK SPIKE	2							INTRODUC. 01.04.2010
	Q221342000	REMACHE EXAGONAL M5	HEXAGONAL RIVET M5	2							
6	J022807000	PORTAMANDOS COMPL. CG6-41	CONTROL HOLDER CG6-41	1							
	U022836000	ESCUDO FAGOR	FAGOR EMBLEM	1							
	Q221023000	CLIP SUJECIÓN RÁPIDA Ø5	RAPID CONNECT CLIP Ø5	2							
	Q419005000	REMACHE 4x8 ALMG3 / ALUMINIO	RIVET 4X8 ALMG3 / ALUMINIUM	6							
	Q012031000	TORNILLO EXAGONAL M5x10 A304	HEXAGONAL BOLT M5x10 A304	2							
	Q302022000	ARANDELA 16x6x1,2 A304	WASHER 16x6x1.2 A304	2							
7	Z400542000	ASA LVS.	HANDLE LVS.	1							
	Q012041000	TORNILLO EXAGONAL M6x10	HEXAGONAL BOLT M6x10	2							
	Q302022000	ARANDELA 16x6x1,2 A304	WASHER 16x6x1.2 A304	2							
8	J040501000	PUERTA DE HORNO	OVEN DOOR	1							
9	U020528000	BISAGRA CIERRE HORNO	OVEN LOCK HINGE	2							
	Q152022000	TORNILLO M6x8	BOLT M6x8	6							

MOD.	COCINAS	ZONA	MUEBLE	PLANO	C-2372

ITEM	CODIGO	DENOMINACION	TEXTO	CG6-41							NOTAS
10	J002613000	LISTON SOPORTE PATAS	TIEDOWN SUPPORTS MB6-40	2							
	Q221343000	REMACHE EXAGONAL M6	HEXAGONAL RIVET M6	4							
11	J022801000	PANEL LATERAL IZDO. CG6-41	LATERAL LEFT RANGE CG6-41	1							ELIMINADA 01.04.2010
11	J022815000	PANEL LATERAL IZDO. CG6-41	LATERAL LEFT RANGE CG6-41	1							INTRODUC. 01.04.2010
	Q419005000	REMACHE 4X8 ALMG3 / ALUMINIO	RIVET 4X8 ALMG3 / ALUMINIUM	4							
	X010503000	CIERRE MUELLE	LOCK SPRING	2							ELIMINADA 01.04.2010
	Z442918000	CLIP CIERRE	LOCK SPRING	2							INTRODUC. 01.04.2010
	Q419007000	REMACHE TUBULAR C/V D3.2X6	TUBULAR RIVET C/V D3.2X6	4							
	Q221342000	REMACHE EXAGONAL M5	HEXAGONAL RIVET M5	1							
12	X260151000	PATA REGULABLE	ADJUSTABLE LEG	4							
13	J022805000	PANEL POSTERIOR CE6-41	REAR PANEL CE6-41	1							
	Q419005000	REMACHE 4X8 ALMG3 / ALUMINIO	RIVET 4X8 ALMG3 / ALUMINIUM	8							
	Q221342000	REMACHE EXAGONAL M5	HEXAGONAL RIVET M5	2							

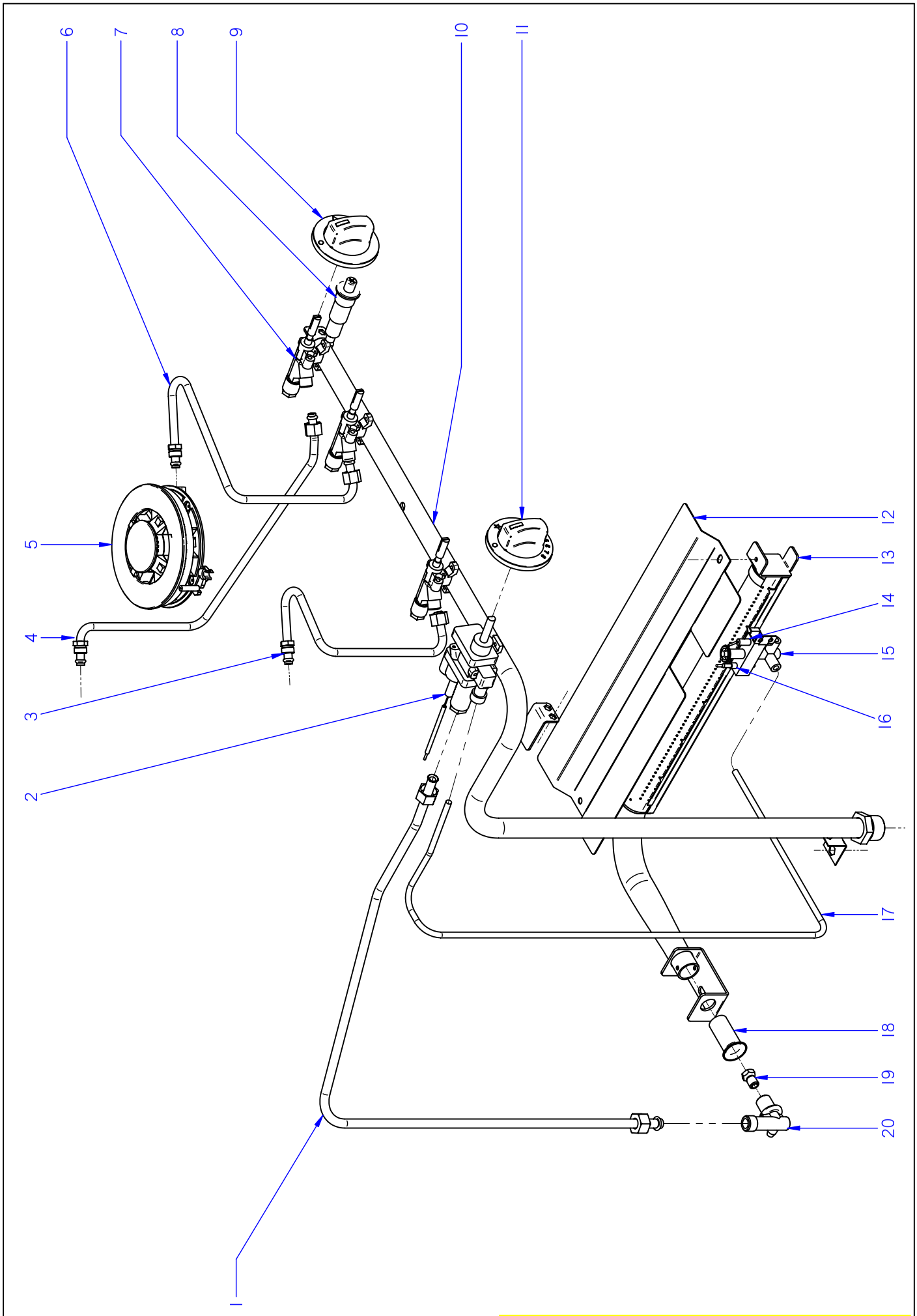

ITEM MARCADO EN COLOR = REPUESTO RECOMENDADO
COLOURED ITEM = RECOMMENDED SPARE PART

N plano	Firma	Fecha	Aparato	CONJUNTO FUNCIONAL	Lamina	
C-2373		2009-06	COCINAS CG6-20 / CG6-40 / CG6-41		3	Fagor Industrial S.Coop. FAGOR Oñate

MOD.	COCINAS	ZONA	CONJUNTO FUNCIONAL	PLANO	C-2373

ITEM	CODIGO	DENOMINACION	TEXTO	CG6-20	CG6-40	CG6-41					NOTAS
1	J025011000	COND. QUEMADOR CG6-41 SNACK	COND BURNER	_	_	1					
2	U742130000	TERMOSTATO MTZ-7200-0.5	TERMOSTATO MTZ-7200-0.5	_	_	1					
S/Nº	Z982018000	BRIDA AMARRE TERMOSTATO	FASTENING FLANGE TERMOST	2	4	5					
	Q011353000	TORNILLO EXAGONAL M5X30	HEXAGONAL BOLT M5X30	4	8	10					
3	J015017000	COND. QUEMADOR ANTERIOR	COND. FRONT BURNER.	1	2	_					
3	J025015000	COND. QUEMADOR ANTER. IZDO.	COND. LEFT FRONT BURNER.	_	_	1					
4	J015015000	COND. QUEMADOR POSTERIOR	COND. REAR BURNER	1	2	2					
5	J015702000	SUPERIOR QUEMADOR BSI	TOP BURNER BSI	2	4	4					
S/Nº	J015710000	BASE QUEMADOR C/TOBERA	BURNER BASE W/NOZZLE	2	4	4					
S/Nº	J015708000	INYECTOR G30/29 G-N	INJECTOR G30/29 G-N	2	4	4					
S/Nº	J012104000	TERMOPAR L=650 COCINA SNACK	THERMOCOUPLE L=650 COOKEF	2	4	4					
	Q161371000	TUERCA EXAGONAL M6X0,75	HEXAGONAL NUT M6X0,75	2	4	4					
S/Nº	J015705000	TAPA SUPERIOR Ø127	UPPER COVER Ø127	2	4	4					
S/Nº	J015704000	TAPON SUPERIOR Ø55	UPPER LID Ø55	2	4	4					
	Q032012000	TORNILLO ALOMADO M3X15	CURVED SCREW M3X15	8	16	16					
6	J025013000	COND. QUEMADOR ANTER. DCHO.	COND. RIGHT FRONT BURNER.	_	_	1					
7	J012101000	GRIFO CAL 20703	TAP CAL 20703	2	4	4					
S/Nº	J022103000	BY-PASS 0,7 TERMOST MTZ-7200	BY-PASS 0,7 TERMOST MTZ-720(	_	_	1					
8	S113034000	PIEZOELECTRICO	PIEZOELECTRIC	2	4	5					
S/Nº	U333003000	CABLE MASA ENCENDEDOR	LIGHTER EARTH CABLE	2	4	5					
S/Nº	R613030000	CABLE BUJIA	SPARK PLUG CABLE	2	4	5					
9	J012102000	MANDO COCINA SNACK GAS	BOTON RANGE GAS SNACK	2	4	4					
10	J015002000	CONDUCCION GENERAL CG6-20	GENERAL PIPE CG6-20	1	_	_					ELIMINADA 01.10.2009
10	J015019000	CONDUCCION GENERAL CG6-20	GENERAL PIPE CG6-20	1	_	_					INTRODUC. 01.10.2009
10	J015005000	CONDUCCION GENERAL CG6-40	GENERAL PIPE CG6-40	_	1	_					ELIMINADA 01.10.2009
10	J015021000	CONDUCCION GENERAL CG6-40	GENERAL PIPE CG6-40	_	1	_					INTRODUC. 01.10.2009
10	J025003000	CONDUCCION GENERAL CG6-41	GENERAL PIPE CG6-41	_	_	1					ELIMINADA 01.10.2009
10	J025018000	CONDUCCION GENERAL CG6-41	GENERAL PIPE CG6-41	_	_	1					INTRODUC. 01.10.2009
	Q302022000	ARANDELA 16x6x1,2 A304	WASHER 16x6x1.2 A304	6	6	3					
	Q221342000	REMACHE EXAGONAL M5	HEXAGONAL RIVET M5	2	2	2					
	Q012031000	TORNILLO EXAGONAL M5x15 A304	HEXAGONAL BOLT M5x15 A304	6	6	2					

MOD.	COCINAS	ZONA	CONJUNTO FUNCIONAL	PLANO	C-2373

ITEM	CODIGO	DENOMINACION	TEXTO	CG6-20	CG6-40	CG6-41					NOTAS
11	J022102000	MANDO HORNO GAS SNACK	BOTONOVEN GAS SNACK	_	_	1					
12	J022604000	DEFLECTOR QUEMADOR SNACK	OVEN BURNER DEFLECTOR	_	_	1					
13	J025702000	QUEMADOR HORNO SNACK	OVEN BURNER.	_	_	1					
14	X022131000	BUJIA	SPARK PLUG	_	_	1					
S/Nº	R613030000	CABLE BUJIA	SPARK PLUG CABLE	_	_	1					
S/Nº	U333003000	CABLE MASA ENCENDEDOR	LIGHTER EARTH CABLE	_	_	1					
15	U322118000	PILOTO COMPLETO 100.062	COMPLETE PILOT LIGHT 100,062	_	_	1					
16	U262130000	TERMOPAR L=1000	THERMOCOUPLE L=1000	_	_	1					
	Q012031000	TORNILLO EXAGONAL M5x15 A304	HEXAGONAL BOLT M5x15 A304	_	_	4					
17	J025009000	TUBO PILOTO HORNO SNACK	PILOT PIPE BURNER SNACK	_	_	1					
	U195009000	MANGUITO EMPALME	HANDLE	_	_	1					
	X205028000	BICONO Ø 6	BICONEØ 6	_	_	1					
	U134323000	RACORD BICONO 6 958.031	BICONE CONNECTION 6 958.031	_	_	1					
18	U325707000	REGULADOR AIRE	AIR CONTROLLER	_	_	1					
	Q012031000	TORNILLO EXAGONAL M5x15 A304	HEXAGONAL BOLT M5x15 A304	_	_	1					
19	X312400000	TOBERA Ø 1,10 B-P	NOZZLE Ø 1.10 B-P	_	_	1					
19	N502401000	TOBERA Ø 1,70 G-N	NOZZLE Ø 1.70 G-N	_	_	1					
20	U915014000	PORTATOBERAS HORNO	OVEN NOZZLE HOLDER	_	_	1					
	Q223019000	TUERCA 3/8 GAS LATÓN	NUT 3/8 GAS BRASS	_	_	1					
	Q301323000	ARANDELA 25X17X6	WASHER 25X17X6	_	_	1					

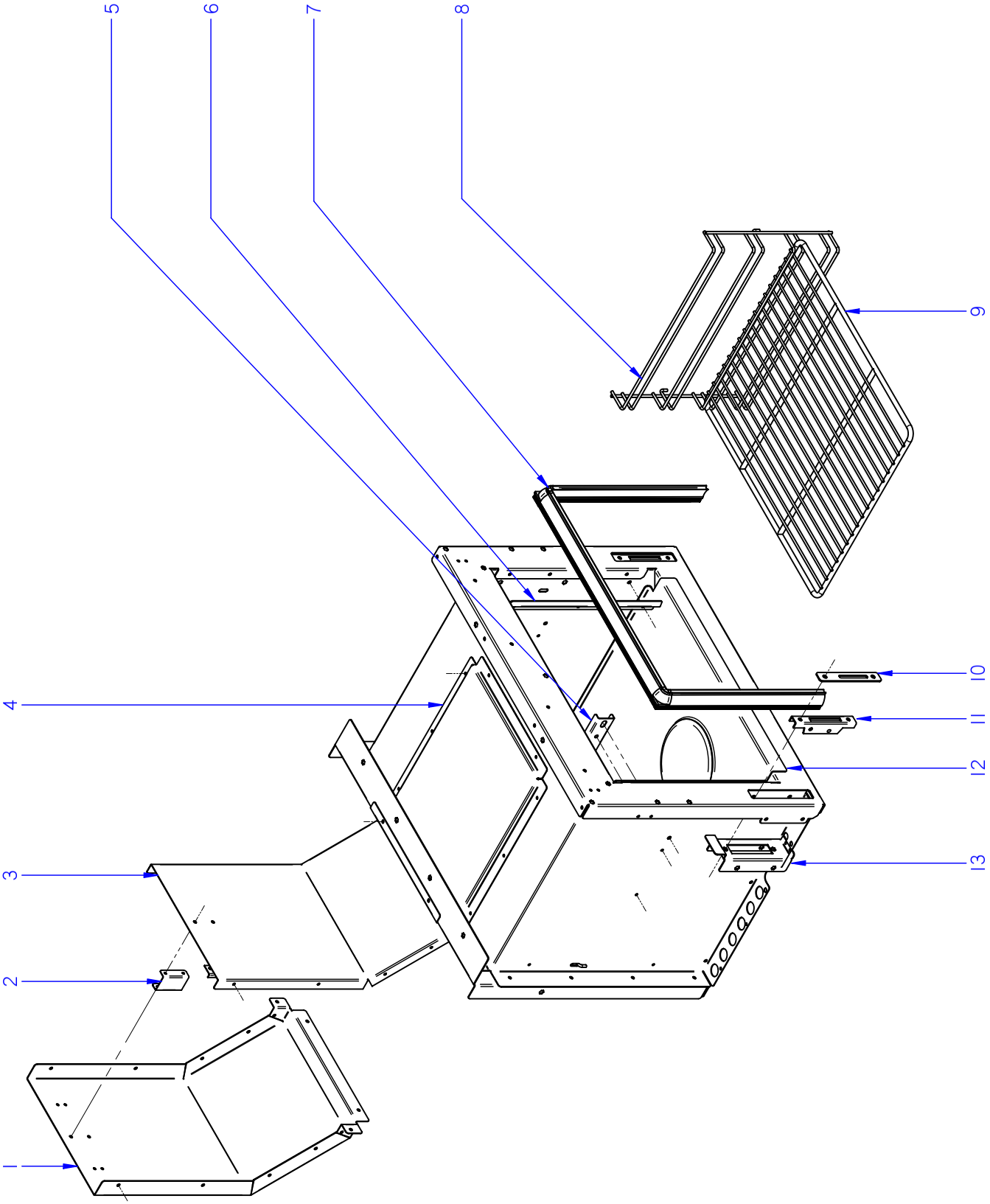

ITEM MARCADO EN COLOR = REPUESTO RECOMENDADO
COLOURED ITEM = RECOMMENDED SPARE PART

N plano	Firma	Fecha	Aparato	HORNO	Lamina	
C-2374		2009-06	COCINA CG6-41		4	Fagor Industrial S.Coop. Oñate

MOD.	COCINAS	ZONA	HORNO	PLANO	C-2374

ITEM	CODIGO	DENOMINACION	TEXTO	CG6-41							NOTAS
1	J022602000	POSTERIOR CHIMENEA CG6-41	REAR FLUEPIPE CG6-41	1							
	Q419005000	REMACHE 4X8 ALMG3 / ALUMINIO	RIVET 4X8 ALMG3 / ALUMINIUM	4							
2	J022608000	SEPAR. CHIMENEA HORNO SNACK	OVEN SNACK SEPAR. FLUEPIPE	1							
	Q419005000	REMACHE 4X8 ALMG3 / ALUMINIO	RIVET 4X8 ALMG3 / ALUMINIUM	4							
3	J022603000	ANTERIOR CHIMENEA CG6-41	FLUEPIPE CG6-41. FRONT	1							
	Q419005000	REMACHE 4X8 ALMG3 / ALUMINIO	RIVET 4X8 ALMG3 / ALUMINIUM	12							
4	J022606000	CHIMENEA SUPERIOR HORNO	FLUEPIPE (HG)	1							
	Q419005000	REMACHE 4X8 ALMG3 / ALUMINIO	RIVET 4X8 ALMG3 / ALUMINIUM	8							
5	U055644000	FIJACION BULBO	FASTENING BULB	1							
	Q412000000	REMACHE TUBULAR 4x8	TUBULAR RIVET 4x8	2							
6	J045610000	SUJECCION JUNTA PUERTA SNACK	SUPE. DOOR SEAL SUPPORT	2							
	Q012031000	TORNILLO EXAGONAL M5x10 A304	HEXAGONAL BOLT M5x10 A304	6							
	Q302022000	ARANDELA 16x6x1,2 A304	WASHER 16x6x1.2 A304	6							
7	J025610000	JUNTA HORNO COMPL.SNACK	OVEN DOOR SEAL SNACK	1							
8	J045609000	GUIA BANDEJAS HORNO SNACK	OVEN TRAY GUIDE SNACK	2							
9	J045613000	PARRILLA DE HORNO SNACK	GRILLE OVEN	1							
10	J045612000	EMBELLEC. GUIA BISAGRA SNACK	HINGE GUIDE TRIM	4							
	Q152045000	TORNILLO AMARRE M6X25	FASTENING BOLT M6X25	4							
11	U010512000	GUIA DE BISAGRA	HINGE GUIDE	2							
12	J025607000	SOLERA DE HORNO GAS SNACK	OVEN FLOOR	1							ELIMINADA 02.11.2009
12	J025615000	SOLERA DE HORNO GAS SNACK	OVEN FLOOR	1							INTRODUC. 02.11.2009
S/Nº	U915618000	TAPILLA DE SOLERA G 700	BASE COVER	1							
13	J042604000	SOPOR. BISAGRA PUERTA HORNO	OVEN SUPORT HINGE	2							
	Q221342000	REMACHE EXAGONAL M5	HEXAGONAL RIVET M5	4							
	Q419005000	REMACHE 4X8 ALMG3 / ALUMINIO	RIVET 4X8 ALMG3 / ALUMINIUM	2							
	Q012031000	TORNILLO EXAGONAL M5X10 A304	HEXAGONAL BOLT M5X10 A304	2							
	Q302022000	ARANDELA Ø16X6X1.2 A.304	WASHER 16X6X1.2 A.304	5							

MOD.	COCINAS	ZONA	VARIOS	PLANO	

ITEM	CODIGO	DENOMINACION	TEXTO	CG6-20	CG6-40	CG6-41					NOTAS
	J016501000	FOLLETO COCINAS GAS SNACK	LEAFLET RANGE GAS SNACK	1	1	1					