FAGOR

FAGOR INDUSTRIAL

DESPIECE TÉCNICO
TECHNICAL PARTS

Lavavajillas

Dishwasher

MODELOS

CO-502 DD / B DD

Enero 2015 January

Revisado Enero 2015 January Revised



Together we evolve

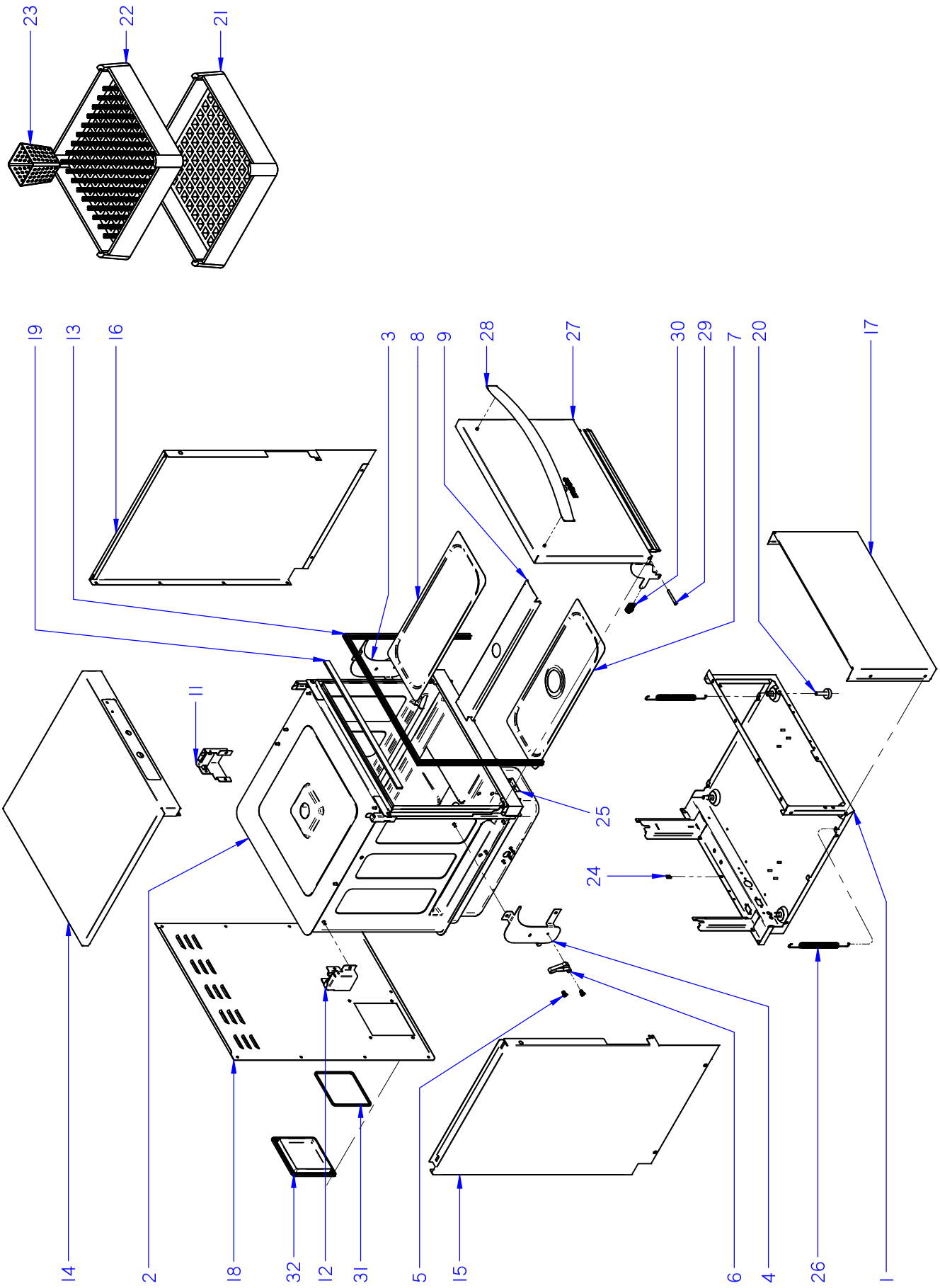

ITEM MARCADO EN COLOR = REPUESTO RECOMENDADO
COLOURED ITEM = RECOMMENDED SPARE PART

N plano / Drawing N.	Firma / Signature	Fecha / Date	Aparato / Appliance	Lamina / Sheet	
C-3342	Iban R.	2014-12	ARMAZON / FRAME LAVAVAJILLAS CO-502 DISHWASHER	1	Fagor Industrial S.Coop. Onate

ZONA / ZONE	ARMAZON / FRAME	LÁMINA / DRAWING	C-3342	FAGOR

ITEM	REFERENCIA REFERENCE	DENOMINACIÓN	DENOMINATION	CO-502							RECOMMENDED	ELIMINADO ELIMINATED	INTRODUCIDO INTRODUCED	NOTAS / NOTES
1	12097740	CONJUNTO_BASE_ARMAZON_AF	BASE FRAME COMPLETE	1										
2	12049291	CAJA SOLDADA CONCEPT	WELDED TUB CONCEPT	1										
3	12043455	SOPORTE RESORTE PUERTA DCHA	DOOR SPRING RIGHT SUPPORT	1										
4	12043457	SOPORTE RESORTE PUERTA IZDA	DOOR SPRING LEFT SUPPORT	1										
5	12043554	EJE RESORTE	SPRING SHAFT	4										
6	12043429	RESORTE PUERTA	DOOR SPRING	2										
7	12109967	BANDEJA FILTRO ALIVIADERO	SPILLWAY FILTER TRAY	1										
8	12109964	BANDEJA CONCEPT LISA (DCHA.)	CONCEPT FLAT TRAY (RIGHT)	1										
9	12098244	SOPORTE CENTRAL BANDEJAS	CENTRAL TRAYS SUPPORT	1										
11	12103774	SUJECIÓN PANEL LATERAL DCHO.	RIGHT SIDE PANEL FASTENING	1										
12	12103787	SUJECIÓN PANEL LATERAL IZDO.	LEFT SIDE PANEL FASTENING	1										
13	12049352	BURLETE APERTURA FRONTAL	FRONT LOADING GASKET	1										
14	12113950	TAPA PORTAMANDOS W	CONTROL PANEL COVER W	1										
15	12122224	PANEL LATERAL IZDO	LEFT SIDE PANEL	1										
16	12122222	PANEL LATERAL DCHO	RIGHT SIDE PANEL	1										
17	12122220	PANEL FRONTAL	FRONT PANEL	1										
18	12120613	PANEL POSTERIOR ADVANCE	REAR PANEL ADVANCE	1										
19	12111378	ESPUMA CIERRE TAPA PORTAMAND.	CTRL. P. COVER CLOSURE FOAM	1										
20	12024163	PATA REGULABLE	REGULABLE FEET	4										
21	12025011	CESTILLO BASE CT-10	CT-10 BASE BASKET	1										
22	12024990	CESTILLO PLATOS CP-16-18	CP-16-18 PLATES BASKET	1										
23	12023745	CESTILLO CUBIERTOS	CUTLERY BASKET	1										
24	12087215	TUERCA RÁPIDA M5 MIKALOR	MIKALOR QUICK NUT M5	19										
25	12044905	SOPORTE BULBO TERMOMETRO	THERMOSTAT BULB SUPPORT	1										
26	12097279	MUELLE APERTURA FRONTAL	FRONT LOADING SPRING	2										
27	12097227	PUERTA COMPLETA	COMPLETE DOOR	1										
28	12049466	ASA PUERTA	DOOR HANDLE	1										
29	12048418	TORN_ESPECIAL_EJE_PUERTA_M6	DOOR AXIS SPECIAL SCREW M-6	2										
30	12047927	TOPE BISAGRA	HINGE DOORSTOP	2										
31	12096947	JUNTA TAPA	COVER'S SEAL	1										
32	12095220	TAPA PLASTICO CAJA CONEXIONES	CONNECTIONS BOX COVER	1										

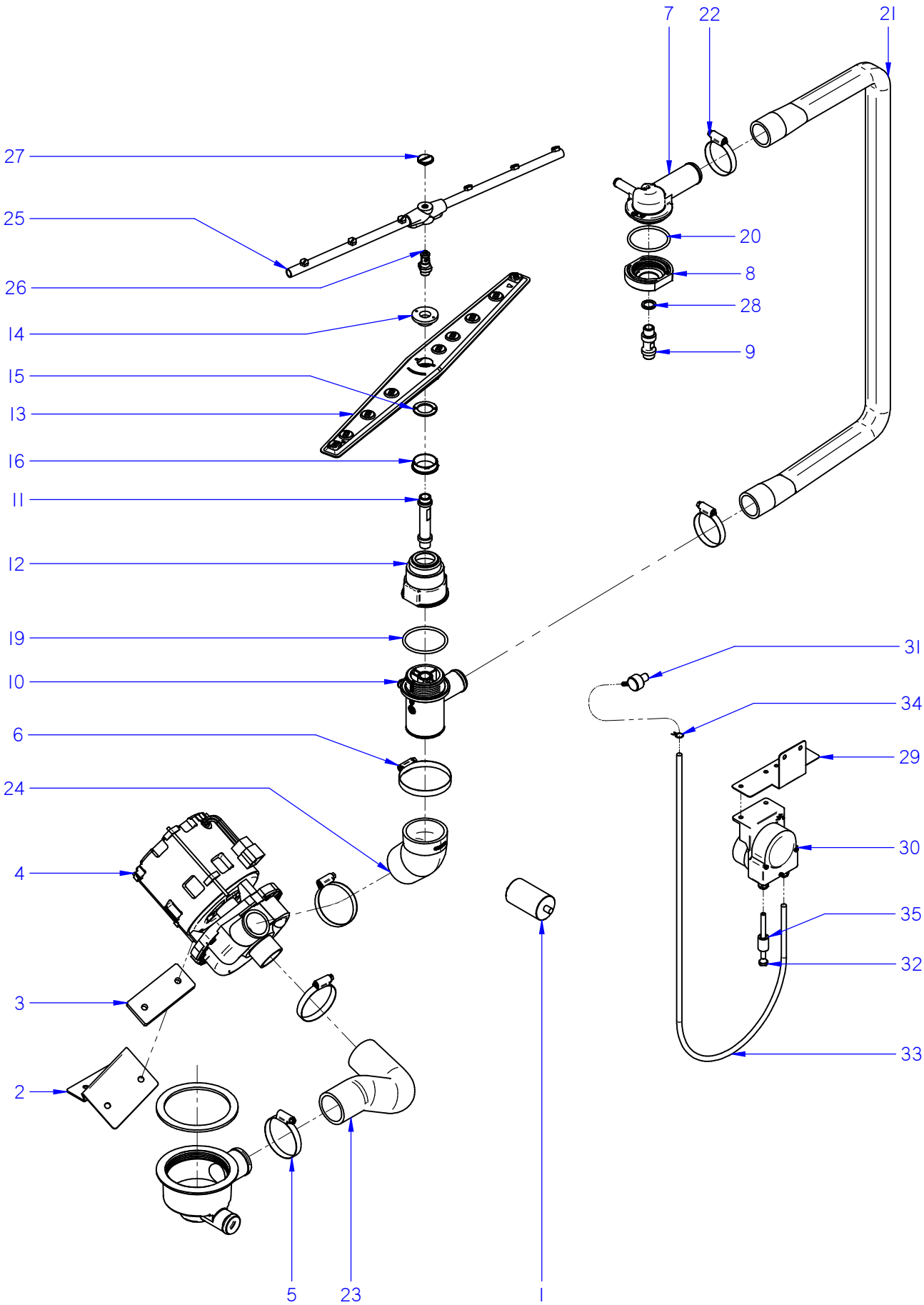

ITEM MARCADO EN COLOR = REPUESTO RECOMENDADO
COLOURED ITEM = RECOMMENDED SPARE PART

N plano / Drawing N.	Firma / Signature	Fecha / Date	Aparato / Appliance	Lamina / Sheet	
C-3343	Iban R.	12-2014	PARTE FUNCIONAL LAVADO / WASHING FUNCTIONAL PART LAVAVAJILLAS CO-502 / DD DISHWASHER	2	Fagor Industrial S.Coop. FAGOR Onate

ZONA / ZONE	PARTE FUNCIONAL LAVADO / WASHING FUNCTIONAL PART	LÁMINA / DRAWING	C-3343	FAGOR

ITEM	REFERENCIA REFERENCE	DENOMINACIÓN	DENOMINATION	CO-502	CO-502 DD						RECOMMENDED	ELIMINADO ELIMINATED	INTRODUCIDO INTRODUCED	NOTAS / NOTES
1	12024376	CONDENSADOR 10MF	10MF CAPACITOR	1	1						X			
2	12043784	SOPORTE BOMBA LAVADO	WASHIG PUMP SUPPORT	1	1									
3	12023556	BASE BOMBA LAVADO 1003016	WASHIG PUMP BASE 1003016	1	1									
4	12043287	MOTOBOMBA 590KW 50Hz	WASHIG PUMP 590KW 50Hz	1	1						X			
4	12102834	MOTOBOMBA 590KW 60Hz	WASHIG PUMP 590KW 60Hz	1	1						X			
5	12009962	ABRAZADERA 40-60	40-60 CLAMP	3	3									
6	12009933	ABRAZADERA 50-70L	50-70L CLAMP	1	1									
7	12041614	SOP. DISTRIBUIDOR SUPERIOR	UPPER SPRY-ARM SUPPORT	1	1									
8	12041531	AMARRE SOPORTE DISTR. SUPERIOR	UPPER DISTRIB. SUPPORT FASTENING	1	1									
9	12043289	EJE LAVADO FRONTAL	WASHING SHAFT FRONT LOADING	1	1									
10	12047863	SOP. DISTRIBUIDOR INFERIOR	LOWER SPRY-ARM SUPPORT	1	1									
11	12048535	EJE LAVADO AF CONCEPT	WASHING SHAFT FRONT LOADING	1	1									
12	12048042	AMARRE SOPORTE DISTR. INFERIOR	LOW. DISTRIB. SUPPORT FASTENING	1	1									
13	12025122	DISTRIBUIDOR MONTADO	COMPLETE DISTRIBUTOR	2	2									
14	12110631	ENGANCHE DISTRIBUIDOR LATON	LATON DISTRIBUTOR HOOK	2	2									
15	12024289	AMARRE ENGANCHE DISTRIBUI	DISTRIBUTOR HOOK FASTENING	2	2									
16	12041629	PROTECTOR FUGAS	LEAKAGE PROTECTOR	2	2									
19	12049052	JUNTA 53,57x3,53 SOP DISTRI INFE	O-RING Ø53,57 x 3,53 LOW. DISTRIB.	1	1									
20	12049055	JUNTA TORICA Ø50,39 x 3,53	O-RING Ø50,39 x 3,53	1	1									
21	12041930	ARBOL LAVADO	WASHING TREE	1	1									
22	12009986	ABRAZADERA 32-50L	32-50L CLAMP	2	2									
23	12103941	CODO ASPIRACION CONCEPT	SUCTION ELBOW ADVANCE	1	1									
24	12041926	CODO IMPULSION CONCEPT	EXPULSION ELBOW ADVANCE	1	1									
25	12111791	RAMA ACLARADO CONCEPT EVO	RINSE BRANCH CONCEPT EVO	2	2									
26	12113893	EJE ACLARADO CONCEPT EVO	RINSE SHAFT CONCEPT EVO	2	2									
27	12009829	TORNILLO ESPECIAL M.5X0.8	SPECIAL SCREW M.5X0.8	2	2									
28	12115944	CALZO EJE LAVADO	WASHING SHAFT SHIM	1	1									

ZONA / ZONE	PARTE FUNCIONAL LAVADO / WASHING FUNCTIONAL PART	LÁMINA / DRAWING	C-3343	FAGOR

ITEM	REFERENCIA REFERENCE	DENOMINACIÓN	DENOMINATION	CO-502	CO-502 DD						RECOMMENDED	ELIMINADO ELIMINATED	INTRODUCIDO INTRODUCED	NOTAS / NOTES
	19022347	**KIT DOSIFICADOR DETERGENTE EVO**	**DETERGENT DISPENSER KIT EVO**											
29	12102040	SOPORT. DOSIFICADORES	DISPENSERS SUPPORT	_	1									
30	12024216	DOSIFIC. DGTE REGULABLE G300	REGUL. DETERG. DISPENSER G300	_	1						X			
31	12024531	INYECTOR DETERGENTE INOX	DETERGENT INJECTOR	_	1									
32	12024139	CONDUCTO ASPIRACIÓN AZKOY CO	AZKOY SUCTION PIPE	_	1									
33	11000079	CONDUCTO DOSIF. TRANSP 6X4	DISPENSER TRANSPARENT PIPE	_	1									
34	12023707	BRIDA ELASTICA TUBO	ELASTIC CLAMP FOR PIPES	_	1									
35	12024353	PESO FILTRO	FILTER'S WEIGHT	_	1									

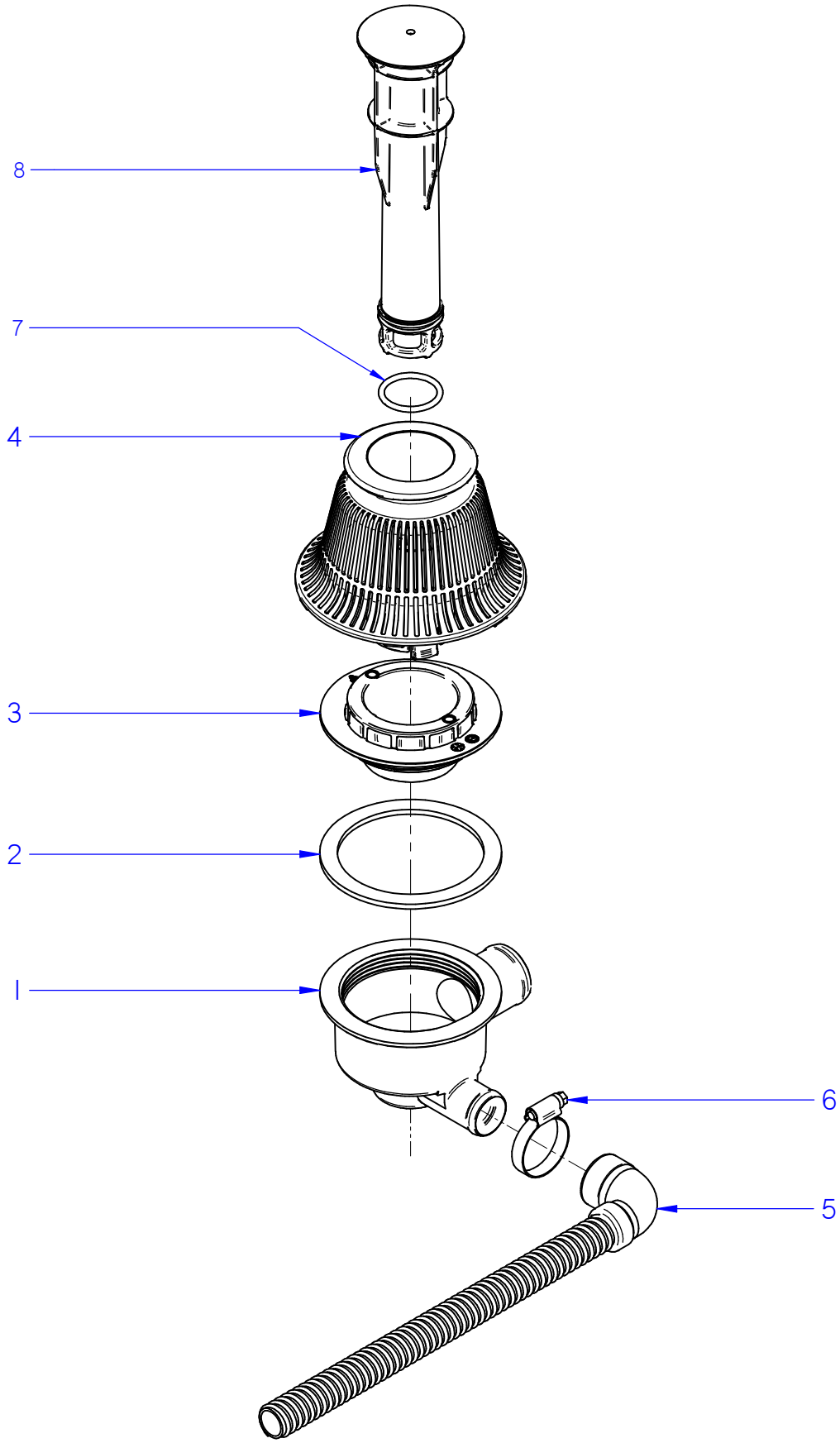

ITEM MARCADO EN COLOR = REPUESTO RECOMENDADO
COLOURED ITEM = RECOMMENDED SPARE PART

N plano / Drawing N.	Firma / Signature	Fecha / Date	Aparato / Appliance	Lamina / Sheet	
C-3344	Iban R.	12-2014	DESAGÜE / DRAINING PART LAVAVAJILLAS CO-502 DISHWASHER	3	Fagor Industrial S.Coop. FAGOR Oñate

ZONA / ZONE	DESAGÜE / DRAIN	LÁMINA / DRAWING	C-3344	FAGOR

ITEM	REFERENCIA REFERENCE	DENOMINACIÓN	DENOMINATION	CO-502							RECOMMENDED	ELIMINADO ELIMINATED	INTRODUCIDO INTRODUCED	NOTAS / NOTES
1	12041533	CUBETA A.F. ADVANCE	FRONT LOADING PAIL ADVANCE	1										
2	12041925	JUNTA Ø110xØ89x3.5	Ø110xØ89x3.5 SEAL	1										
3	12041600	AMARRE CUBETA A.F. ADVANCE	FRONT LOADING PAIL FASTENING	1										
4	12049633	FILTRO COMPLETO CONCEPT	COMPLETE FILTER CONCEPT	1										
5	12115471	MANGUERA DESAGÜE	DRAINING PIPE	1							X			
6	12009997	ABRAZADERA 25-40	25-40 CLAMP	1										
7	12049632	ALIVIADERO COMPLETO	COMPLETE SPILLWAY	1										
8	12115850	JUNTA TORICA ALIVIADERO	SPILLWAY O-RING	1										
	19013376	**KIT BOMBA DE DESAGÜE**	**DRAINING PUMP KIT**											

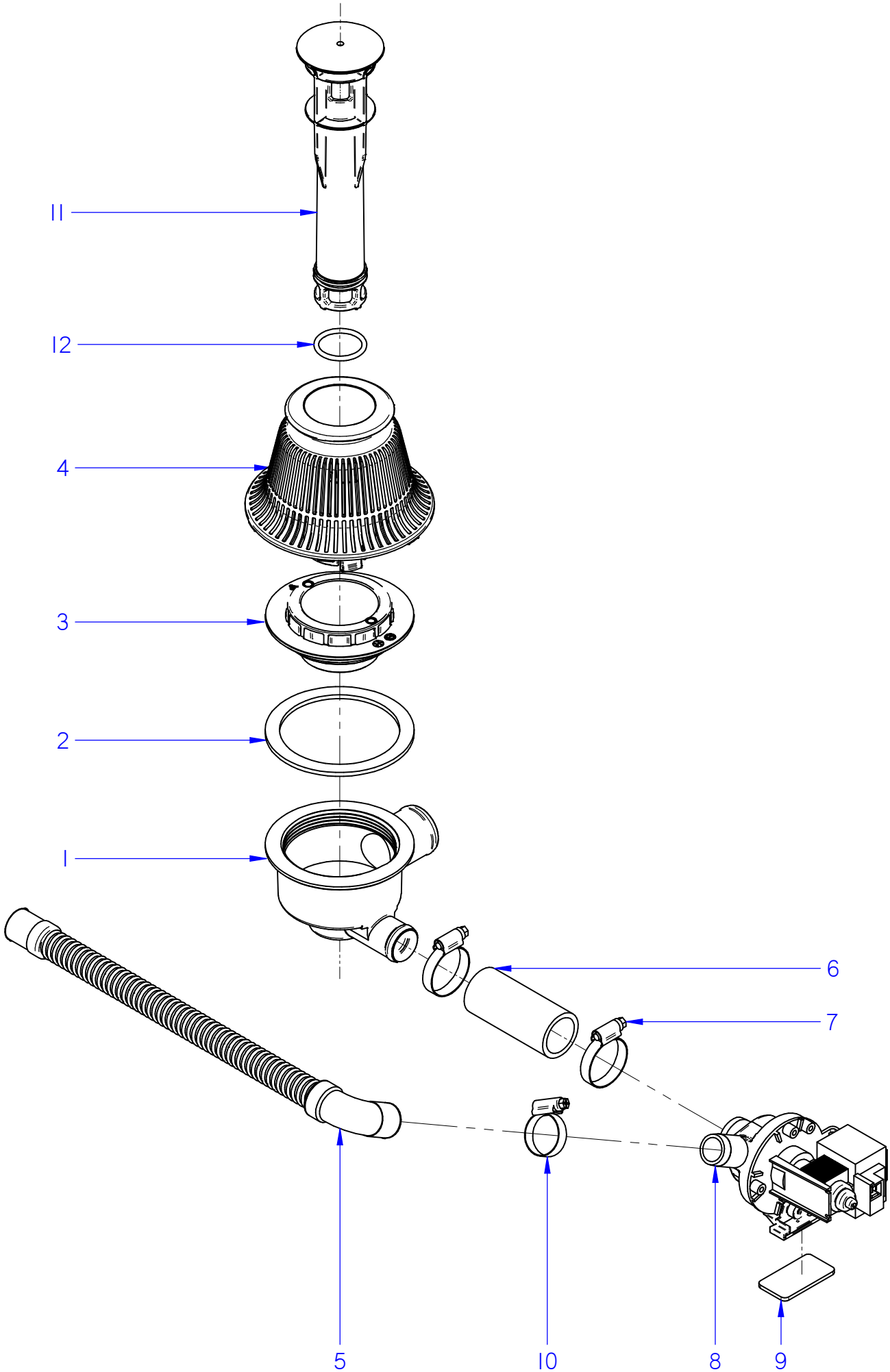

ITEM MARCADO EN COLOR = REPUESTO RECOMENDADO
COLOURED ITEM = RECOMMENDED SPARE PART

N plano / Drawing N.	Firma / Signature	Fecha / Date	Aparato / Appliance	Lamina / Sheet	
C-3345	Iban R.	12-2014	DESAGÜE / DRAINING PART LAVAVAJILLAS COP-502 B DISHWASHER	4	Fagor Industrial S.Coop. FAGOR Oñate

ZONA / ZONE	DESAGÜE / DRAIN	LÁMINA / DRAWING	C-3345	FAGOR

ITEM	REFERENCIA REFERENCE	DENOMINACIÓN	DENOMINATION	CO-502 B							RECOMMENDED	ELIMINADO ELIMINATED	INTRODUCIDO INTRODUCED	NOTAS / NOTES
1	12041533	CUBETA A.F.	FRONT LOADING PAIL	1										
2	12041925	JUNTA Ø110xØ89x3.5	Ø110xØ89x3.5 SEAL	1										
3	12041600	AMARRE CUBETA A.F. ADVANCE	FRONT LOADING PAIL FASTENING	1										
4	12049633	FILTRO COMPLETO CONCEPT	COMPLETE FILTER CONCEPT	1										
5	12023666	MANGUERA DESAGÜE	DRAINING PIPE	1							X			
6	12041924	COND. CUBETA-BOMBA DESAGÜE	PAIL - DRAINING PUMP PIPE	1										
7	12009997	ABRAZADERA 25-40	25-40 CLAMP	2										
8	12094265	BOMBA DESAGÜE	DRAINING PUMP	1							X			
9	12010021	JUNTA GUIA	GUIDE SEAL	1										
10	12010023	ABRAZADERA 20-32	20-32 CLAMP	1										
11	12114854	ALIVIADERO COMP. VERSION BD	DR. PUMP VERSION SPILLWAY	1										
12	12115850	JUNTA TORICA ALIVIADERO	SPILLWAY O-RING	1										

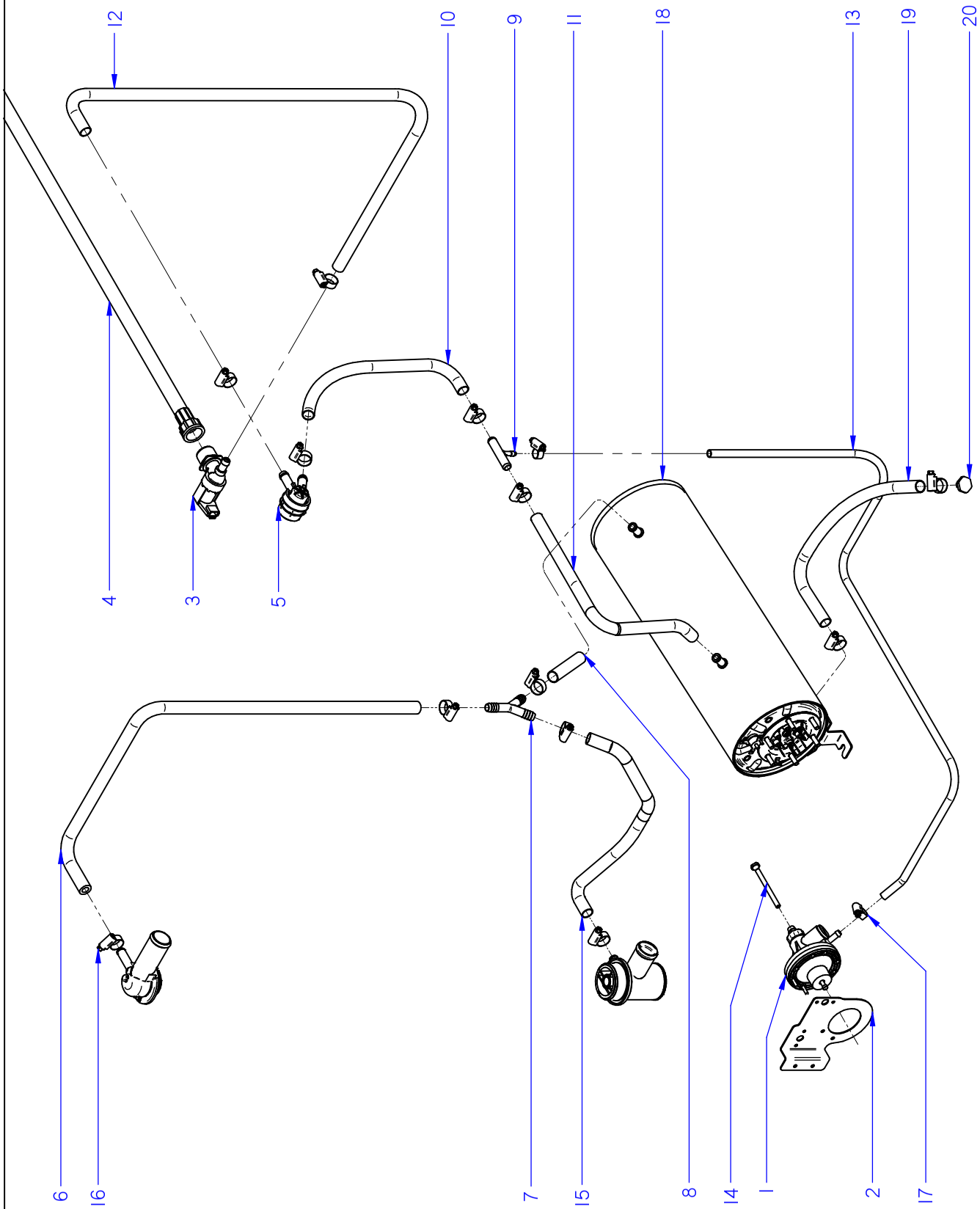

ITEM MARCADO EN COLOR = REPUESTO RECOMENDADO
COLOURED ITEM = RECOMMENDED SPARE PART

N plano / Drawing N.	Firma / Signature	Fecha / Date	Aparato / Appliance	Lamina / Sheet	
C-3346	Iban R.	2014-12	ACLARADO / RINSING PART LAVAVAJILLAS CO-502 DISHWASHER	5	Fagor Industrial S.Coop. FAGOR Oñate

ZONA / ZONE	PARTE FUNCIONAL ACLARADO / FUNCTIONAL RINSE PART	LÁMINA / DRAWING	C-3346	FAGOR

ITEM	REFERENCIA REFERENCE	DENOMINACIÓN	DENOMINATION	CO-502							RECOMMENDED	ELIMINADO ELIMINATED	INTRODUCIDO INTRODUCED	NOTAS / NOTES
1	12045206	DOSIFICADOR ABRILL. AQUA	AQUA RINSE AID DISPENSER	1							X			
2	12049650	SOPORTE TERMOSTATO Y DOSIFIC	THERMOST. AND DISPENSER SUPP.	1										
3	12095427	E.V SIMPLE 220V SALIDA A 90º	SIMPLE E.V 90º EXIT	1							X			
4	12024115	MANGUERA ENTRADA AGUA	WATER SUPPLY HOSE	1										
5	12024568	VALVULA ANTIRRETORNO	NON-RETURN VALVE	1										
6	11000083	TUBO GOMA NEGRA D 17x10	BLACK RUBBER PIPE D 17x10	1										
7	12023511	RACORD EN Y	Y FITTING	1										
8	11000083	TUBO GOMA NEGRA D 17x10	BLACK RUBBER PIPE D 17x10	1										
9	12025288	TOMA PRESION	PRESSURE FITTING	1										
10	11000083	TUBO GOMA NEGRA D 17x10	BLACK RUBBER PIPE D 17x10	1										
11	11000083	TUBO GOMA NEGRA D 17x10	BLACK RUBBER PIPE D 17x10	1										
12	11000083	TUBO GOMA NEGRA D 17x10	BLACK RUBBER PIPE D 17x10	1										
13	11000070	TUBO GOMA NEGRO D 10,5*5	BLACK RUBBER PIPE D 10,5*5	1										
14	12024139	CONDUCTO ASPIRACIÓN AZKOY CO	AZKOY SUCTION PIPE	1										
15	11000083	TUBO GOMA NEGRA D 17x10	BLACK RUBBER PIPE D 17x10	1										
16	12010036	ABRAZADERA 12-20	12-20 CLAMP	10										
17	12010047	ABRAZADERA 8-14L	8-14L CLAMP	2										
18	12097081	CALDERIN CONCEPT SOLDADO	CONCEPT BOILER WELDED	1										
19	11000083	TUBO GOMA NEGRA D 17x10	BLACK RUBBER PIPE D 17x10	1										
20	12041528	Tapon M10x1.5	M10x1.5 CAP	1										

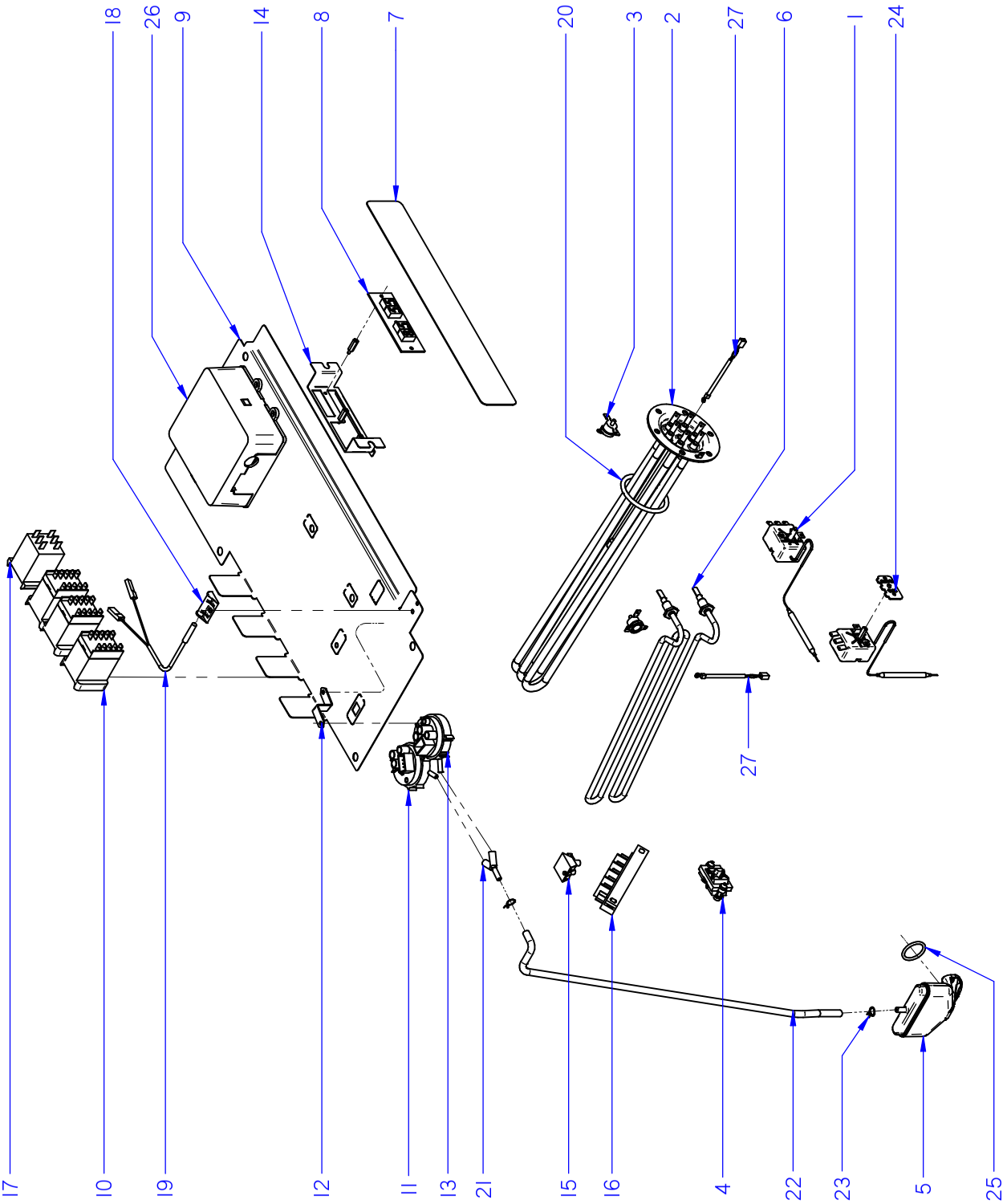

ITEM MARCADO EN COLOR = REPUESTO RECOMENDADO
COLOURED ITEM = RECOMMENDED SPARE PART

N plano / Drawing N.	Firma / Signature	Fecha / Date	Aparato / Appliance	Lamina
C-3347	Iban R.	2014-12	CONJUNTO ELECTRICO / ELECTRICAL PART LAVAVAJILLAS CO-502 DISHWASHER	6

Fagor Industrial S.Coop. FAGOR
Onate

ZONA / ZONE	CONJUNTO ELECTRICO / ELECTRICAL PART	LÁMINA / DRAWING	C-3347	FAGOR

ITEM	REFERENCIA REFERENCE	DENOMINACIÓN	DENOMINATION	CO-502							RECOMMENDED	ELIMINADO ELIMINATED	INTRODUCIDO INTRODUCED	NOTAS / NOTES
1	12040858	TERMOSTATO REGULABLE 85ºC	REGULABLE THERMOSTAT 85ºC	2							X			
2	12098745	RESISTENCIA CALDERIN 6KW	BOILER'S RESISTOR 6KW	1							X			
3	12096597	TERM.SEG. 261B 110ºC FAST 90	SAFETY THER. 261B 110ºC FAST 90	2							X			
4	12024230	RETENEDOR DE CABLE	CABLE RETAINER	1										
5	12093146	CAMPANA TANQUE	TUB'S PRESSURE CHAMBER	1							X			
6	12048965	RESISTENCIA TANQUE 2800W	TUB'S RESISTOR 2800W	1							X			
7	12118982	EMBELLECEDOR CO-502	CO-502 STICKER	1							X			
8	12024028	VISUALIZADOR 12V 4 DIGITOS 7 SEG.	12V 4 DIGITS 7 SEGMENTS DISPLAY	1							X			
9	12044604	SOP. COMPONENTES ELECTRICOS	ELECTRIC COMPONENTS SUPPORT	1										
10	12024011	CONTACTOR 230 V. 50-60 HZ	230 V. 50-60 HZ CONTACTOR	3							X			
11	12096970	PRESOSTATO 1,40-6,30 BAR SIMPLE	1,40-6,30 BAR PRESSURE SWITCH	1							X			
12	12098323	SOPORTE PRESOSTATO AF	PRESSURE SWITCH SUPPORT	1										
13	12096968	PRESOSTATO 1,40-6,30 BAR SIMPLE	1,40-6,30 BAR PRESSURE SWITCH	1							X			
14	12022219	SOPORTE VISUALIZADOR	DISPLAY SUPPORT	1										
15	12024110	REGLETA DE CONEXIONES	CONNECTION STRIP	1										
16	12025183	REGLETA AUXILIAR FV-122	AUX. CONNECTION STRIP FV-122	1										
17	12023706	RELE 230V. 16A 50-60 HZ	230V. 16A 50-60 HZ RELAY	1							X			
18	12024066	AMARRE INTERRUPTOR MAGNETICO	MAGNETIC SWITCH'S SUPPORT	1										
19	12024477	INTERRUPTOR MAGNETICO	MAGNETIC SWITCH	1							X			
20	12010051	JUNTA TORICA RESIST. CALDERIN	BOILER'S RESISTOR'S O-RING	1							X			
21	12023510	RACORD EN Y	Y FITTING	1										
22	11000066	TUBO GOMA NEGRO D 8*4	BLACK RUBBER PIPE D 8*4	1										
23	12023707	BRIDA ELASTICA TUBO	ELASTIC CLAMP FOR PIPES	2										
24	12044848	REGULADOR A 60ºC Tt DE 85ºC	60ºC Tt DE 85ºC REGULATOR	1										
25	12093145	JUNTA TORICA CAMPANA	PRESSURE CHAMBER'S O-RING	1										
26	12008750	CONTROL TARJETA 5 RELES	5 RELAY CONTROL CARD	1							X			
27	12025036	CONJUNTO SONDA 64kOHM NTC	64kOHM NTC THERMOSTAT	2										

ZONA / ZONE	VARIOS / VARIOUS		LÁMINA / DRAWING		FAGOR

ITEM	REFERENCIA REFERENCE	DENOMINACIÓN	DENOMINATION	CO-502							RECOMMENDED	ELIMINADO ELIMINATED	INTRODUCIDO INTRODUCED	NOTAS / NOTES
	12115668	CABLEADO PORTAMAN. EVAD-21	CNTRL. PANEL WIRING EVAD-21	1										
	12120084	INSTALACION GENERAL CO W, 48, 64	ELECTRICAL WIRING CO W, 48, 64 UL	1										
	12023913	CABLE DE ALIMENTACION-2.5	POWER CORD-2.5	1										
	12009946	CABLEADO TENSOR	TENSIONER WIRING	2										

ZONA / ZONE	RECOMENDADOS / RECOMMENDED	LÁMINA / DRAWING	FAGOR

ITEM	REFERENCIA REFERENCE	DENOMINACIÓN	DENOMINATION	CO-502 DD	CO-502 B DD							ELIMINADO ELIMINATED	INTRODUCIDO INTRODUCED	NOTAS / NOTES
1	12024376	CONDENSADOR 10MF	10MF CAPACITOR	1	1									C-3343
4	12043287	MOTOBOMBA 590KW 50Hz	WASHIG PUMP 590KW 50Hz	1	1									C-3343
4	12102834	MOTOBOMBA 590KW 60Hz	WASHIG PUMP 590KW 60Hz	1	1									C-3343
30	12024216	DOSIFIC. DGTE REGULABLE G300	REGUL. DETERG. DISPENSER G300	1	1									C-3343
5	12115471	MANGUERA DESAGÜE	DRAINING PIPE	1	_									C-3344
5	12023666	MANGUERA DESAGÜE	DRAINING PIPE	_	1									C-3345
8	12094265	BOMBA DESAGÜE	DRAINING PUMP	_	1									C-3345
1	12045206	DOSIFICADOR ABRILL. AQUA	AQUA RINSE AID DISPENSER	1	1									C-3346
3	12095427	E.V SIMPLE 220V SALIDA A 90º	SIMPLE E.V 90º EXIT	1	1									C-3346
1	12040858	TERMOSTATO REGULABLE 85ºC	REGULABLE THERMOSTAT 85ºC	2	2									C-3347
2	12098745	RESISTENCIA CALDERIN 6KW	BOILER'S RESISTOR 6KW	1	1									C-3347
3	12096597	TERM.SEG. 261B 110ºC FAST 90	SAFETY THER. 261B 110ºC FAST 90	2	2									C-3347
5	12093146	CAMPANA TANQUE	TUB'S PRESSURE CHAMBER	1	1									C-3347
6	12048965	RESISTENCIA TANQUE 2800W	TUB'S RESISTOR 2800W	1	1									C-3347
7	12118982	EMBELLECEDOR CO-502	CO-502 STICKER	1	1									C-3347
8	12024028	VISUALIZADOR 12V 4 DIGITOS 7 SEG.	12V 4 DIGITS 7 SEGMENTS DISPLAY	1	1									C-3347
10	12024011	CONTACTOR 230 V. 50-60 HZ	230 V. 50-60 HZ CONTACTOR	3	3									C-3347
11	12096970	PRESOSTATO 1,40-6,30 BAR SIMPLE	1,40-6,30 BAR PRESSURE SWITCH	1	1									C-3347
13	12096968	PRESOSTATO 1,40-6,30 BAR SIMPLE	1,40-6,30 BAR PRESSURE SWITCH	1	1									C-3347
17	12023706	RELE 230V. 16A 50-60 HZ	230V. 16A 50-60 HZ RELAY	1	1									C-3347
19	12024477	INTERRUPTOR MAGNETICO	MAGNETIC SWITCH	1	1									C-3347
29	12010051	JUNTA TORICA RESIST. CALDERIN	BOILER'S RESISTOR'S O-RING	1	1									C-3347

CO, COP 504 W

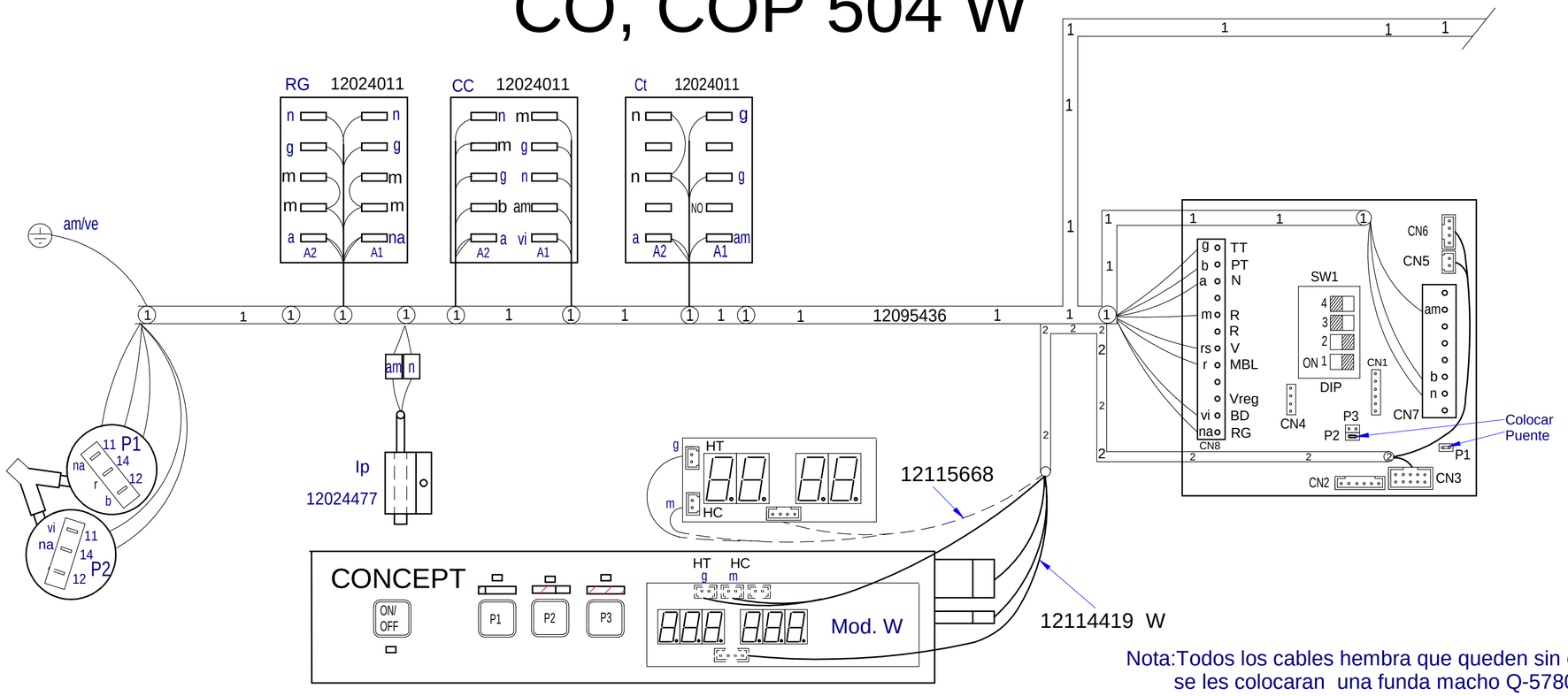

Nota:Todos los cables hembra que queden sin conectar se les colocaran una funda macho Q-578006

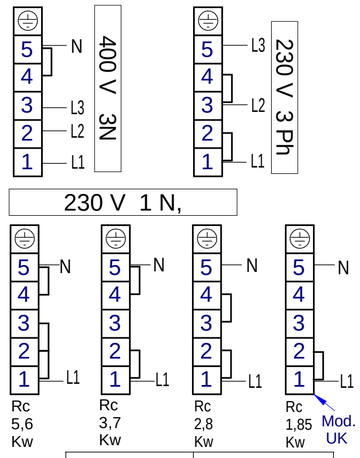

①	12120084
②	12095673
③	12992009
Prensa estopas	12009927
Esquema teorico	12103192
Indicador de componentes	12022162
Leyenda	12103338

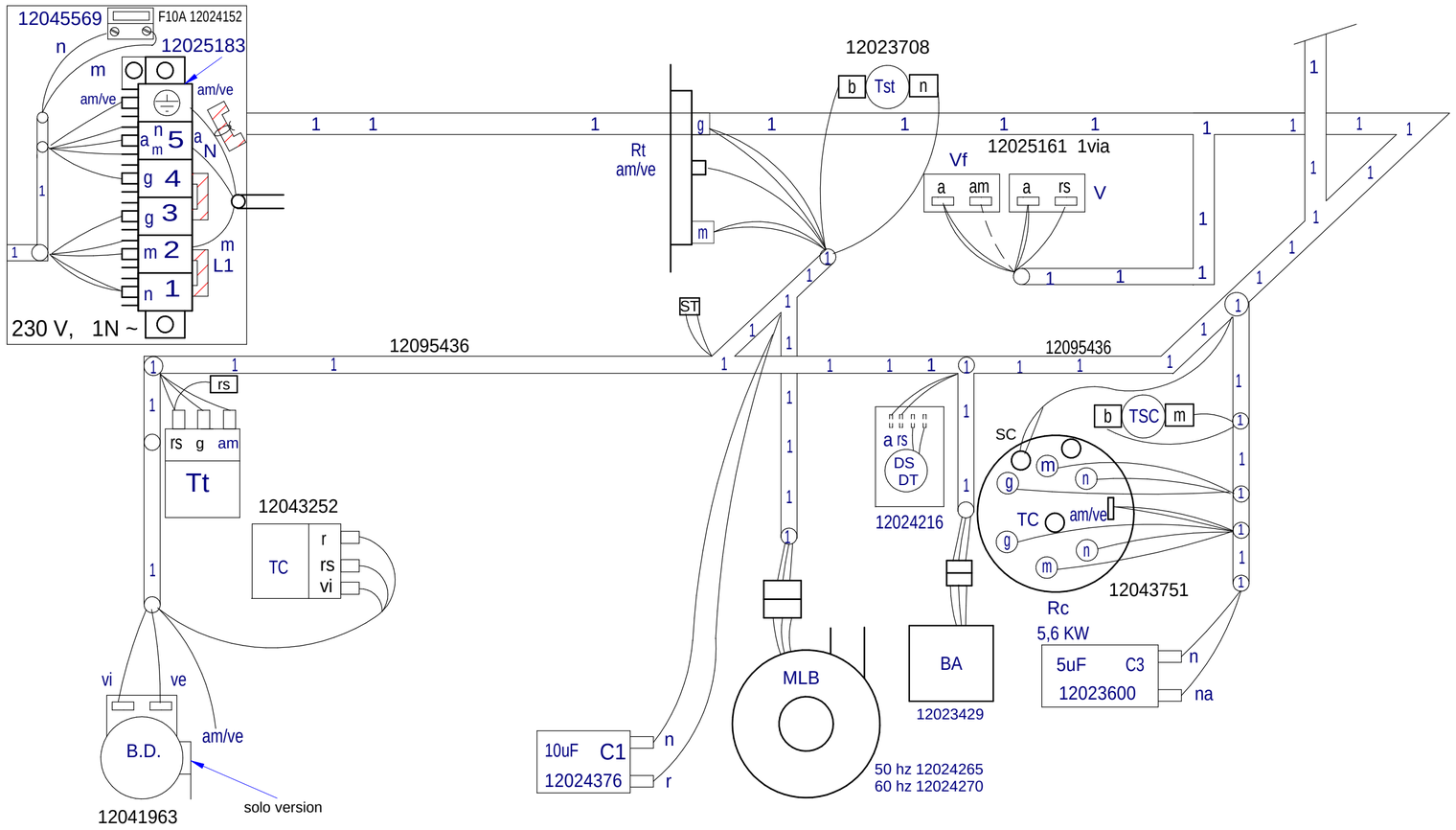

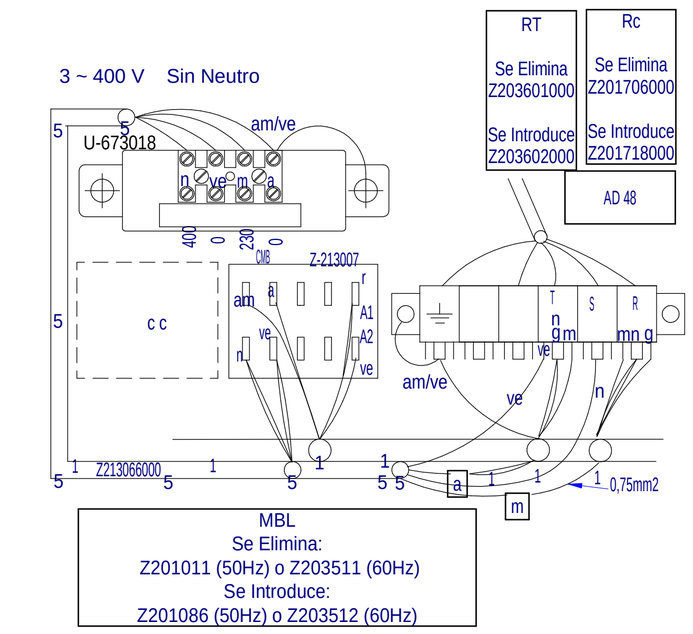

MBL
Se Elimina:
Z201011 (50Hz) o Z203511 (60Hz)
Se Introduce:
Z201086 (50Hz) o Z203512 (60Hz)

-	Plano Montaje CO, COP 504 W (64 W)	-	12114492		
Nº	TITLE	QTY	CODE	MATERIAL	TREATMENT

GENERAL TOLERANCES: ISO 2768-1 Very Coarse

LINEAR	Fine	Medium	Coarse	Very Coarse
<3mm	±0.05	±0.10	±0.15	
3-6mm	±0.05	±0.10	±0.20	
6-30mm	±0.10	±0.20	±0.50	
30-120mm	±0.15	±0.30	±0.80	
120-400mm	±0.20	±0.50	±1.20	
400-1000mm	±0.30	±0.80	±2.00	
1000-2000mm	±0.50	±1.20	±3.00	

ANGULAR	Fine	Medium	Coarse	Very Coarse
<10mm	±1°	±1°30'	±3°	
10-50mm	±30'	±1°	±2°	
50-120mm	±20'	±30'	±1°	
120-400mm	±10'	±15'	±30'	
>400mm	±5'	±10'	±20'	

GENERAL TOLERANCE FOR FORM AND POSITION: ISO 2768-2

LAVAVAJILLAS

FAGOR INDUSTRIAL

DESIGNED BY	VALIDATED BY	DATE
M.Maillo	A.G.	12.06.2014

SHEET FORMAT:	A2
DESING CENTER:	ONA
MAT STATUS:	
DOC STATUS:	
SHEET:	1 / 1
SCALE:	1:1

12114492 REVISION -

PROPOSED BY: - ISSUE DATE:

CO-502, COP-504

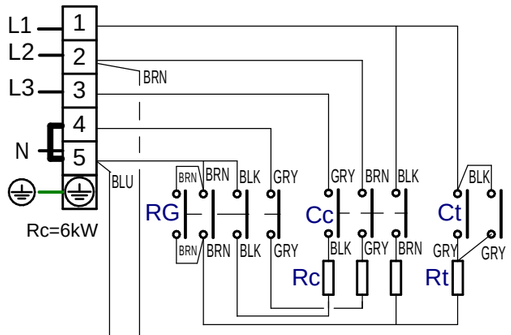

400 V, 3N

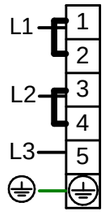

230 V 3Ph

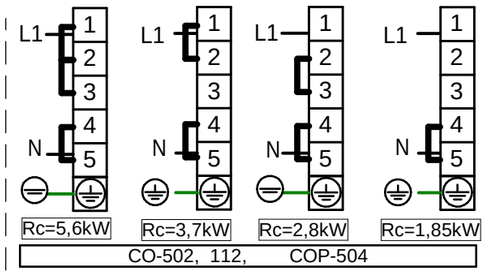

230 V, 1 N

CO 112, 172, COP-174

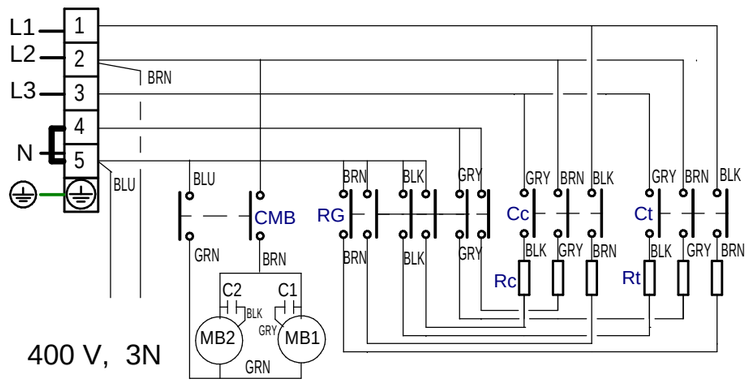

400 V, 3N

CO 352, 402

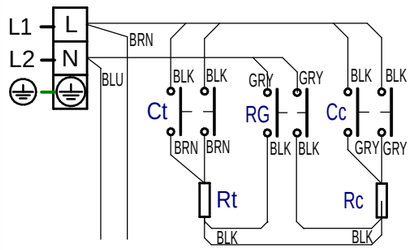

230 V, 1 N

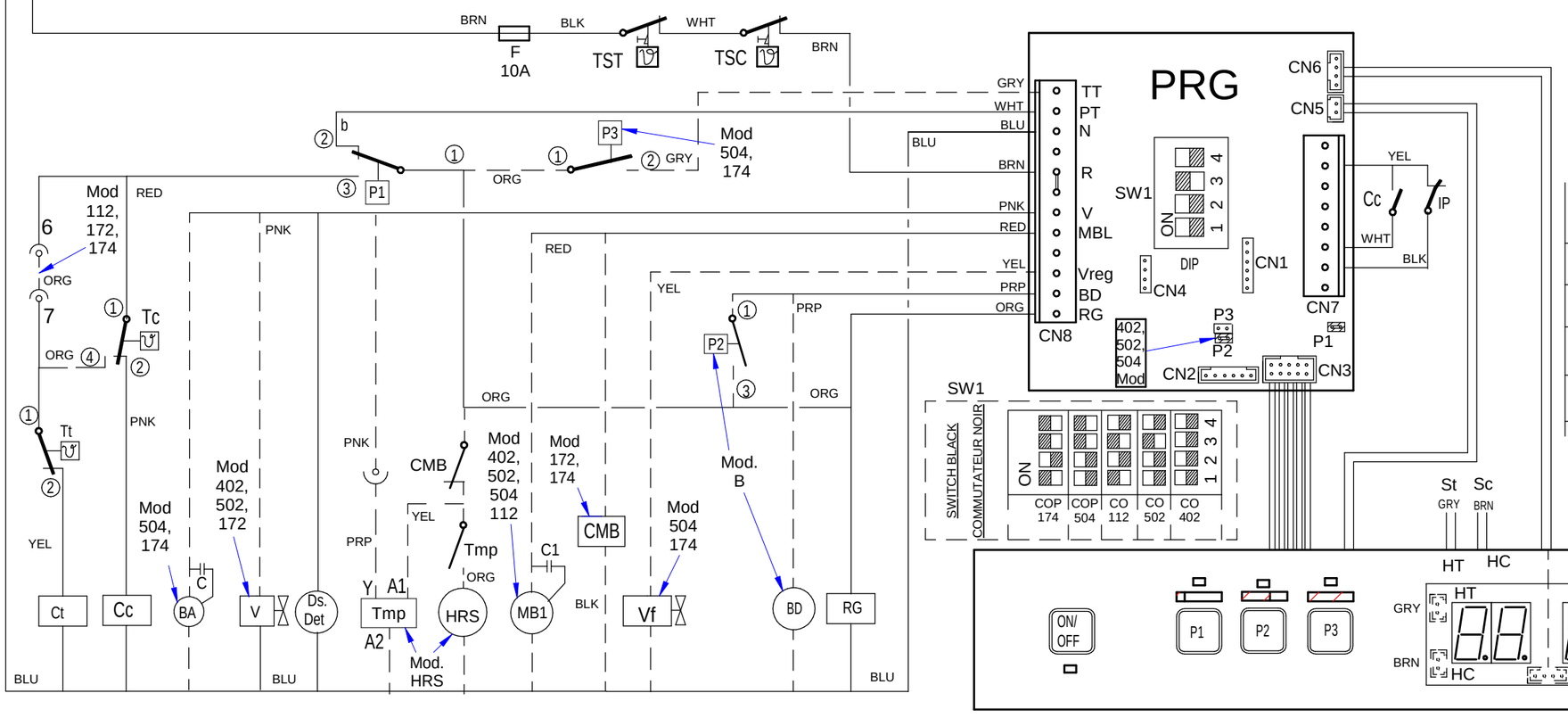

CYCLE

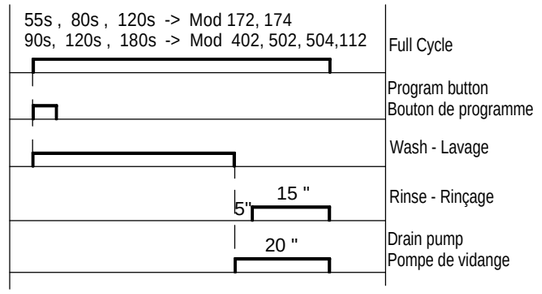

12121300

-	Esquema Teorico CO XX2, COP XX4,	-	12121300		
Nº	TITLE	QTY	CODE	MATERIAL	TREATMENT

GENERAL TOLERANCES: ISO 2768-1 Very Coarse

LINEAR	Fine	Medium	Coarse	Very Coarse
<3mm	±0.05	±0.10	±0.15	
3-6mm	±0.05	±0.10	±0.20	
6-30mm	±0.10	±0.20	±0.50	
30-120mm	±0.15	±0.30	±0.80	
120-400mm	±0.20	±0.50	±1.20	
400-1000mm	±0.30	±0.80	±2.00	
1000-2000mm	±0.50	±1.20	±3.00	

ANGULAR	Fine	Medium	Coarse	Very Coarse
<10mm	±1º	±1º30'	±3º	
10-50mm	±30'	±1º	±2º	
50-120mm	±20'	±30'	±1º	
120-400mm	±10'	±15'	±30'	
>400mm	±5'	±10'	±20'	

GENERAL TOLERANCE FOR FORM AND POSITION: ISO 2768-2

LAVAVAJILLAS

FAGOR INDUSTRIAL

DESIGNED BY	VALIDATED BY	DATE
M.Maillo	A.gallastegui	19.01.2015

SHEET FORMAT:	A3
DESING CENTER:	ONA
MAT STATUS:	
DOC STATUS:	
SHEET:	1 / 1
SCALE:	1:1

12121300

REVISION

-

PROPOSED BY: -

ISSUE DATE:

LEYENDA APERTURA FRONTAL Y CAPOTA

	ESPAÑOL	ENGLISH	FRANÇAIS	DEUTSCH	ITALIANO	中文
Ⓐ Ⓑ	Puntos de conexion con R	Conecction point with R	Points de conexion R	Anschlußpunkte mit R	Punti di collegamento con R	带R接触点
BA	Bomba Aclarado	Rinse pump				
BD	Bomba desagüe	Drain pump	Pompe de vidange	Abflußpumpe	Pompa scarico	排水泵
C1, C2, C3	Condensador	Condenser	Condensateur	Kondensator	Condensatore	电容
CMB	Contactor bomba lavado	Wash pump contactor	Contacteur pompe lavage	Türrelais	Contattore pompa lavaggio	清洗泵接触器
Cc	Contactor calentamiento calderin	Boiler heating contactor	Contacteur chauf. surchauffeur	Kontaktschütz Waschpumpe	Contattore riscaldamento boiler	升温箱加热接触器
Ct	Contactor calentamiento tanque	Tank heating contactor	Contacteur chaufage cuve	Kontaktschütz Boilerheizung	Contattore riscaldamento serbatoio	水箱加热接触器
CP	Rele puerta	Door relay	Relais porte	Kontaktschütz Heizung Tank	Rele porta	门继电器
Ds.	Dosificador	Detergent doser	Dosseur	Dosierer Spülmittel	Dosatore detersivo	清洗剂药液泵
E.B	Electrobomba de presion	Electric pressure pump	Electropompe de pression	Elektro-Drucksteigungspumpe	Electropompa pressione	电子压力泵
IG	Interruptor general	Main switch	Interrupteur general	Hauptschalter	Interruttore generale	主开关
IP	Micro puerta	Door microswitch	Micro porte	Mikroschalter Tür	Micro porta	门磁开关
H1	Piloto de encendido	Operation light	Voyant funcionement	Betriebsanzeigelampe	Spia accensione	运行指示灯
H2	Piloto marcha	Start light	Voyant demarrage	Startanzeigelampe	Spia avvio	开始指示灯
H3	Piloto maquina preparada	Light machine ready	Voyant machine prêt	Betriebsbereitschaftsanzeigelampe	Pilota macchina preparata	加热完成 指示灯
HSal	Piloto falta de Sal	Light Lack of Salt				
MB1, MB2	Bomba lavado	Wash pump	Pompe lavage	Waschpumpe	Pompa lavaggio	清洗泵
M	Motor programador	Motor programmer	Moteur du programmateur	Motor Programmiervorrichtung	Motore programmatore	程序电机
M Av. R	Motor program. avance rapido	Motor program. rapid advance	Moteur du progr.avance rapide	Motor Programmiervorrich. Betrieb	Motore programmatore avanzamento rapido	程序电机. 高速高级
M1	Micro programador marcha	Micro programmer on	Micro du programm. de marche	Motor Programmiervorrich. Waschen	Micro programma. di funzionamento	微程序 开
M2	Micro programador lavado	Micro programmer wash	Micro du programm. de lavage	Motor Programmiervorrich. Spülen	Micro programmatore di lavaggio	微程序 清洗
M3	Micro programador aclarado	Micro programmer rinse	Micro du programm. de rinçage	Motor Programmiervorrich. Vorlauf	Micro programmatore di risciacquo	微程序 喷淋
M4, M5	Micro programador avance	Micro programmer advance	Micro du programm. avance	Motor Programmiervorrich. schneller Vorlauf	Micro programmatore avanzamento	微程序 高级
P1, P3	Presostato	Pressure switch	Pressostat	Druckwächter	Pressostato	压力开关
P2	Presostato limitador	Hi-limit pressure switch	Pressostat de securité	Begrenzer Druckwächter	Pressostato limitatore	高水位限制 压力开关
R	Rele de Generador de A.C.	Generator relay	Relais du Generateur	Relais Generator	Rele Generatore	热水供应器继电器
RG	Rele General	Main Relay		Stromversorgungsanschluß Gener.		
Ⓛ1 Ⓛ2 Ⓛ3 Ⓝ	Alimentac. Generador A.C.	Water heater feeding	Alimentation generateur		Alimentazione generatore	热水供应器电源线
RC	Resistencia calderin	Boiler heating element	Resistance surchauffeur	Heizwiderstand Boiler	Resistenza boiler	升温箱加热管
RT	Resistencia tanque	Tank heater	Resistance cuve	Heizwiderstand Tank	Resistenza serbatoio	水箱加热管
Tt	Termostato tanque	Tank thermostat	Thermostat de cuve	Thermostat Tank	Termostato serbatoio	水箱温控器
TC	Termostato calderin	Boiler thermostat	Thermostat surchauffeur	Thermostat kessel	Termostato boiler	升温箱温控器
Tst	Limitador tanque	Tank limiter	Limitateur de cuve	Begrenzer Tank	Limitatore serbatoio	水箱安全温控器
TSC	Limitador calderin	Boiler Hi-limit	Limiteur surchauffeur	Begrenzer Boiler	Limitatore boiler	升温箱安全温控器
TSTP	Termostato termo-stop	Termo-stop Thermostat	Thermostat Termo-stop	Thermostat Termo-stop	Termostato Termo-stop	温度停止温控器
V	Electrovalvula llenado y aclarado	Fill and rinse valve	Electrovan. remplissage rinçage	Elektroventil Füllen und Spülen	Elettroval. riempimento e risciacquo	电磁阀
Vf	Electrovalvula Aclarado Frio	Cold Water rinse valve				
VR1, VR2, VR3, BR	Electrovalvula Descalcificacion	Soft Water valve				
VE,	Ventilador cuadro electrico	Switchboard fan	Ventilateur tableau electrique	Schalttafelventilator	Ventilatore quadro elettrico	风机
HRS	Sistema recuperacion energia	Heat Recovery System				

COLOR	COLORES	COLOUR	COULEURS	FARBEN	COLORE	颜色
a = BLU =	Azul	Blue	Bleu	Blau	Blu	蓝
am = YEL =	Amarillo	Yellow	Jaune	Gelb	Giallo	黄
am/ve = YEL/GRN	Amarillo/verde	Yellow / green	Jaune / vert	Gelb/grün	Giallo/verde	黄/绿
b = WHT =	Blanco	White	Blanc	Weiß	Bianco	白
g = GRY =	Gris	Grey	Gris	Grau	Grigio	灰
m = BRN =	Marrón	Brown	Marron	Braun	Marrone	棕
n = BLK =	Negro	Black	Noir	Schwarz	Nero	黑
na = ORG =	Naranja	Orange	Orange	Orange	Arancio	橙
r = RED =	Rojo	Red	Rouge	Rot	Rosso	红
rs = PNK =	Rosa	Pink	Rose	Rosa	Roseo	粉
ve = GRN =	Verde	Green	Vert	Grün	Verde	绿
vi = PRP =	Violeta	Purple	Violet	Violett	Viola	紫

12103338