Mod./Type: _70/... FRGS... PW
_90/... FRGS... PW

cod./num. 2531923.00

data/date: 05/12/2014

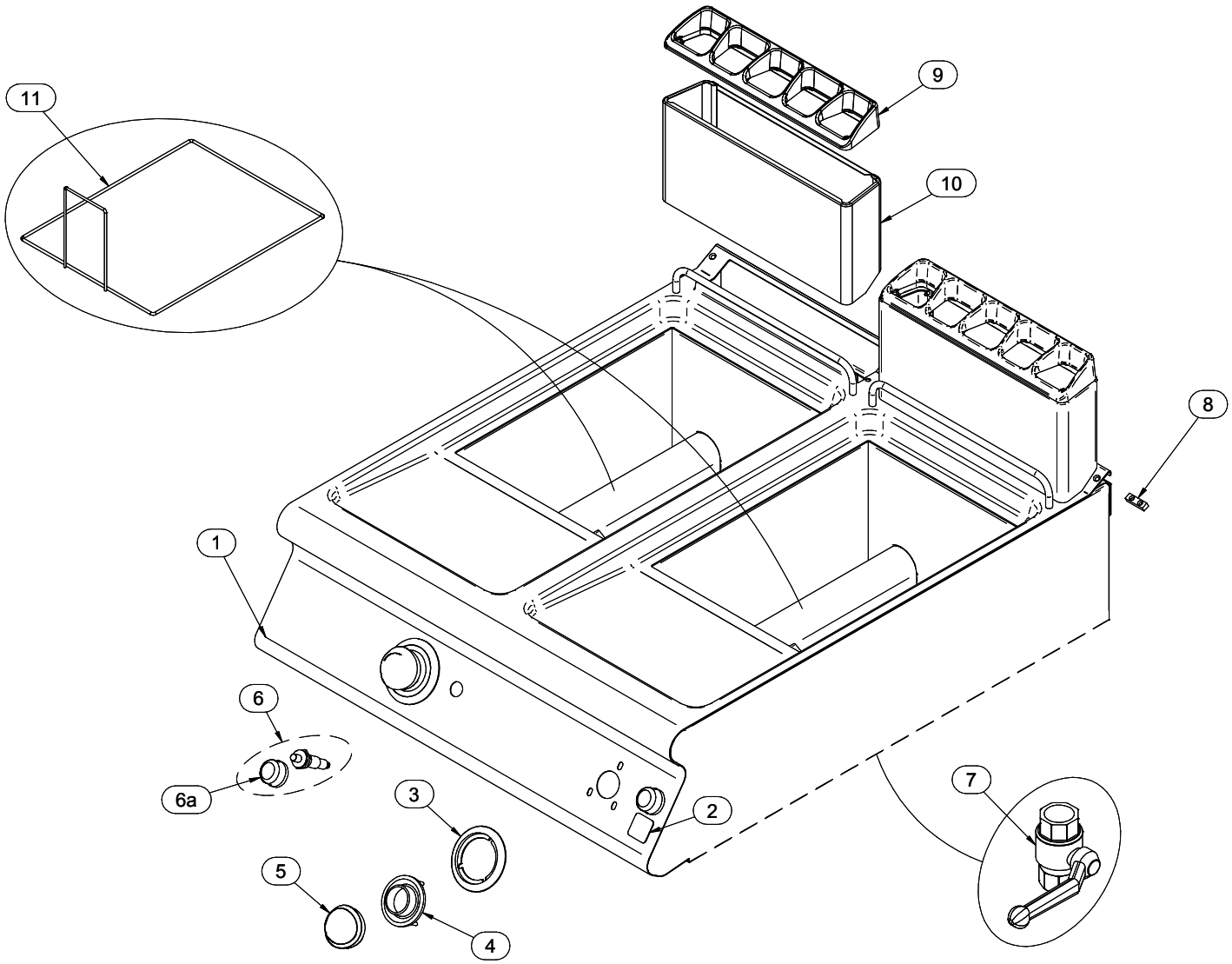

Mod./Type: **_70/... FRGS... PW - _90/... FRGS... PW**

POWER

cod./num. 2531917.00

data/date: 23/07/2014

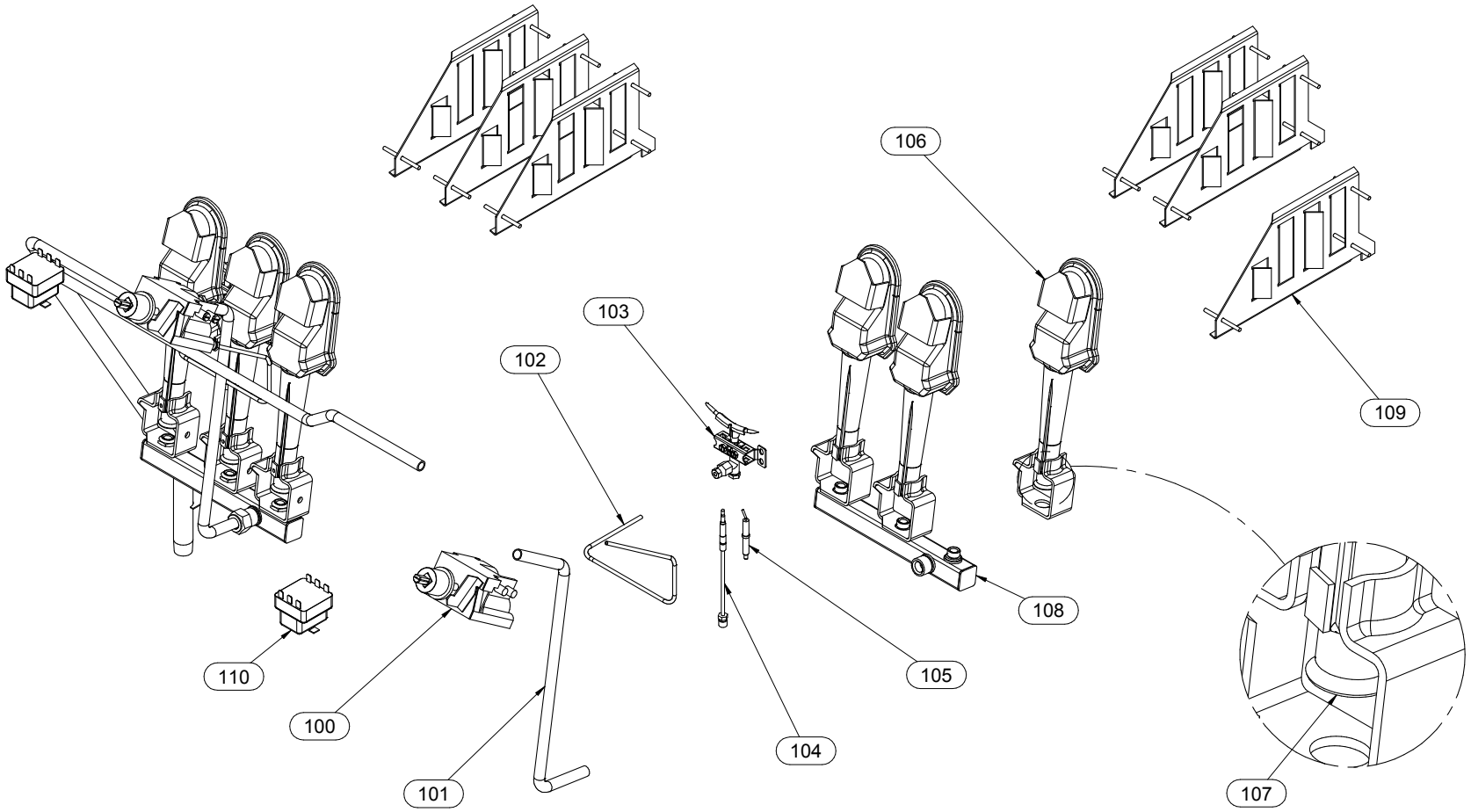

Mod./Type: **_70 - _90 .../40 ... - .../80 ... - .../120 ...**

VANO / CABINET - ...B - ...BE - ...BH2

cod./num. 2531578.00

data/date: 05/06/2014

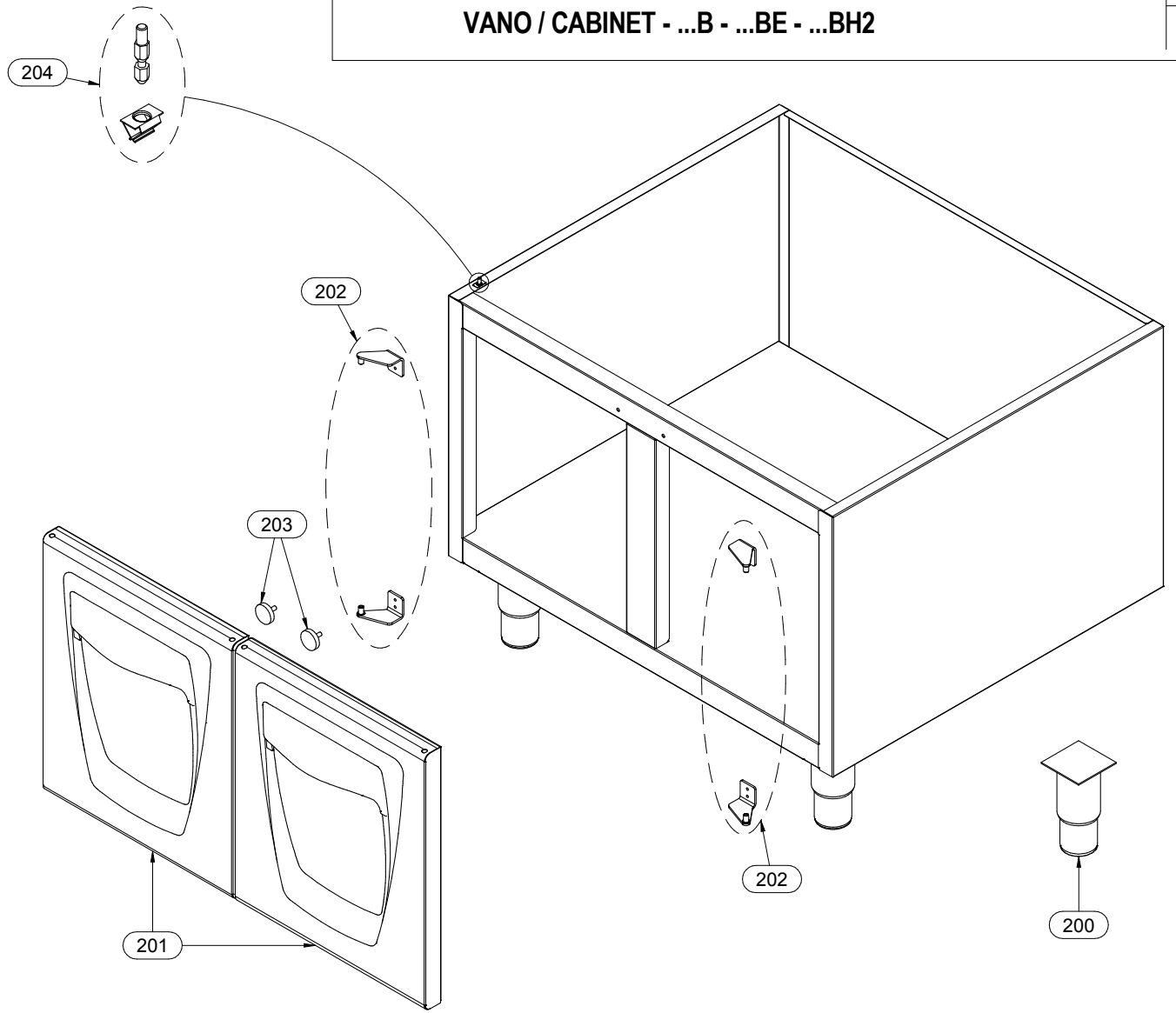

Mod.:	_70/... FRGS... PW _90/... FRGS... PW			cod. / num. 2531924.00 data / date 05/12/2014 rif. / ref. 2531923.00		EM70/40 FRGS13 PW	EM70/80 FRGS13 PW	EM70/40 FRGS17 PW	EM70/80 FRGS17 PW	EM90/40 FRGS13 PW	EM90/80 FRGS13 PW	EM90/40 FRGS17 PW	EM90/80 FRGS17 PW	EM90/40 FRGS22 PW	EM90/80 FRGS22 PW	NOTE
POS.	DESCRIZIONE	DESCRIPTION	DENOMINATION	BENENNUNG	COD.	Q. ty										
1	CRUSCOTTO	CONTROL PANEL	BANDEAU	BEDIENBLENDE	9111624.00	1		1		1		1		1		
					9111625.00		1		1		1		1		1	
2	MARCHIO	BRAND NAME	MARQUE	MARKENZEICHEN	982.023.00	1	1	1	1	1	1	1	1	1	1	
3	SERIGRAFIA	SCREEN PRINT	SÉRIGRAPHIE	SIEBDRUCK	910.187.00	1	2	1	2	1	2	1	2	1	2	
4	LABIRINTO	LABYRINTH	LABYRINTHE	LABYRINTH	256.235.00	1	2	1	2	1	2	1	2	1	2	
5	MANOPOLA	KNOB	BOUTON	DREHKNOPF	256.243.00	1	2	1	2	1	2	1	2	1	2	
6	ACCENDITORE PIEZO	PIEZO LIGHTER	ALLUMEUR PIEZO	PIEZOZÜNDER	912.091.00	1	2	1	2	1	2	1	2	1	2	
6a	CAPPUCCIO	CAP	CAPUCHON	KAPPE	951.047.00	1	2	1	2	1	2	1	2	1	2	
7	VALVOLA	VALVE	SOUPAPE	VENTIL	678.007.00	1	2	1	2	1	2	1	2	1	2	
8	PIASTRINA GIUNZIONE	FIXING PLATE	PLAQUETTE FIXAGE	BEFESTIGUNGSPLATTE	941.130.00	1	1	1	1	1	1	1	1	1	1	
9	GRIGLIA CAMINO	FLUE GRIDDLE	GRILLE POUR CHEMINÉE	KAMINROST	982.014.00	1	2	1	2	1	2	1	2	1	2	
10	CAMINO	CHIMNEY	CHEMINÉE	KAMIN	256.309.00	1	2	1	2	1	2	1	2	1	2	
11	FILTRO	FILTER	FILTER	FILTER	683.096.00	1	2			1	2					
					983.048.00			1	2			1	2			
					983.045.00									1	2	
12																
13																
14																
15																
16																
17																
18																
19																
20																
21																
22																
23																
24																
25																
26																
27																
28																
29																
30																
31																
32																
33																
34																
35																
36																
37																
38																

Mod.:	_70/… - 90/... FRGS… PW POWER			cod. / num. 2531918.00 data / date 25/06/2014 rif. / ref. 2531917.00		_70/40 FRGS13 PW	_70/80 FRGS13 PW	_70/40 FRGS17 PW	_70/80 FRGS17 PW	_90/40 FRGS13 PW	_90/80 FRGS13 PW	_90/40 FRGS17 PW	_90/80 FRGS17 PW	_90/40 FRGS22 PW	_90/80 FRGS22 PW	NOTE	
POS.	DESCRIZIONE	DESCRIPTION	DENOMINATION	BENENNUNG	COD.	Q. ty											
100	VALVOLA GAS	GAS VALVE	SOUPAPE GAZ	GAS VENTIL	256.408.00	1	2	1	2	1	2	1	2	1	2		
101	TUBO GAS	GAS PIPE	TUBE GAZ	GASROHR	256.409.00	1	2									**FROM: 01.10.2014**	**TO: 30.11.2014**
					256.409.15	1	2									**FROM: 01.12.2014**	**TO:...**
					256.411.00			1	2								
					256.413.00					1	2					**FROM: 01.10.2014**	**TO: 30.11.2014**
					256.413.15					1	2					**FROM: 01.12.2014**	**TO:...**
					256.415.00							1	2				
					256.417.00									1	2	**FROM: 01.10.2014**	**TO: 30.11.2014**
					256.417.15									1	2	**FROM: 01.12.2014**	**TO:...**
102	TUBO GAS	GAS PIPE	TUBE GAZ	GASROHR	256.410.00	1	2										
					256.412.00			1	2								
					256.414.00					1	2						
					256.416.00							1	2				
					256.418.00									1	2		
103	GRUPPO PILOTA	PILOT GROUP	GROUPE VEILLEUSE	ZÜNDBRENNER GRUPPE	672.184.00	1	2	1	2	1	2	1	2	1	2		
104	TERMOCOPPIA	THERMOCOUPLE	THERMOCOUPLE	THERMOELEMENT	6101082.00	1	2	1	2	1	2	1	2	1	2		
105	CANDELA ACCENSIONE	IGNITION ELECTRODE	BOUGIE D'ALLUMAGE	KERZE SCHNELLBRENNER	672.060.00	1	2	1	2	1	2	1	2	1	2		
106	BRUCIATORE	BURNER	BRULEUR	BRENNER	672.181.00	2	4	3	6	2	4	3	6	3	6		
107	BOCCOLA REGOLAZIONE ARIA	AIR REGULATION BUSHING	BAGUE DE RÉGULATION AIR	LUFTREGLERBÜCHSE	672.133.00	2	4	3	6	2	4	3	6	3	6		
108	PORTAUGELLO	NOZZLE HOLDER	PORTE-INJECTEUR	SPRITZDÜSE-TRÄGER	675.511.00	1	2			1	2						
					675.512.00			1	2			1	2	1	2		
109	TURBOLATORE	TURBULATOR	TURBULATEUR	TURBOLATOR	9111632.00	2	4	3	6	2	4	3	6				
					9111633.00									3	6		
110	TERMOSTATO SICUREZZA	SAFETY THERMOSTAT	THERMOSTAT DE SECURITÉ	TEMPERATURBEGRENZER	961.044.00	1	2	1	2	1	2	1	2	1	2		
111																	
112																	
113																	
114																	
115																	
116																	
117																	
118																	
119																	
120																	
121																	
122																	
123																	
124																	
125																	
126																	
127																	
128																	
129																	
130																	
131																	

Mod.:	_70/... - _90/… VANO / CABINET …B - …BE - …BH2			cod. / num. 2531579.00 data / date 05/06/2014 rif. / ref. 2531578.00		RICAMBI CONSIGLIATI - RECOMMENDED SPARE PARTS - PIÈCES DÉTACHÉES RECOMMANDÉES - EMPFOHLENEN ERSATZTEILE	EM70/40 ...	EM70/80 ...	EM70/120 ...	EM90/40 ...	EM90/80 ...	EM90/120 ...	NOTE	
POS.	DESCRIZIONE	DESCRIPTION	DENOMINATION	BENENNUNG	COD.		Q. ty							
200	PIEDINO	FOOT	PIED	STELLFUSS	912.090.00		4	4	4	4	4	4	FROM: 15.12.2011	TO: 17.05.2013
					912.090.14		4	4	4	4	4	4	FROM: 18.05.2013	TO:...
201	PORTA	DOOR	PORTE	TÜR	256.215.00		1	2	3	1	2	3		
202	COPPIA CERNIERE	GASKETS PAIR	COUPLE CHARNIÈRES	SCHARNIERPAAR	256.216.00		1	2	3	1	2	3		
203	MAGNETE	MAGNET	MAGNÉTO	MAGNET	684.007.00		1	2	3	1	2	3	FROM: 15.12.2011	TO: 01.01.2014
					984.006.00		1	2	3	1	2	3	FROM: 02.01.2014	TO:...
204	FISSAGGIO	FIXING	FIXAGE	BEFESTIGUNG	256.431.00		4	4	4	4	4	4	FROM: 04.05.2015	TO:...
205														
206														
207														
208														
209														
210														
211														
212														
213														
214														
215														
216														
217														
218														
219														
220														
221														
222														
223														
224														
225														
226														
227														
228														
229														
230														
231														
232														
233														
234														