DESPIECE TECNICO

Lavavajillas de capota
Lave-vaisselle d' capot
Pass-through dishwasher
Durchschub geschirrspüler
Lavastoviglie a cappuccio
Lava-louças de capota

Modelos:

AD-120 CW

Junio 2011 June

Revisado Septiembre 2013 September Revised

FAGOR

FAGOR INDUSTRIAL

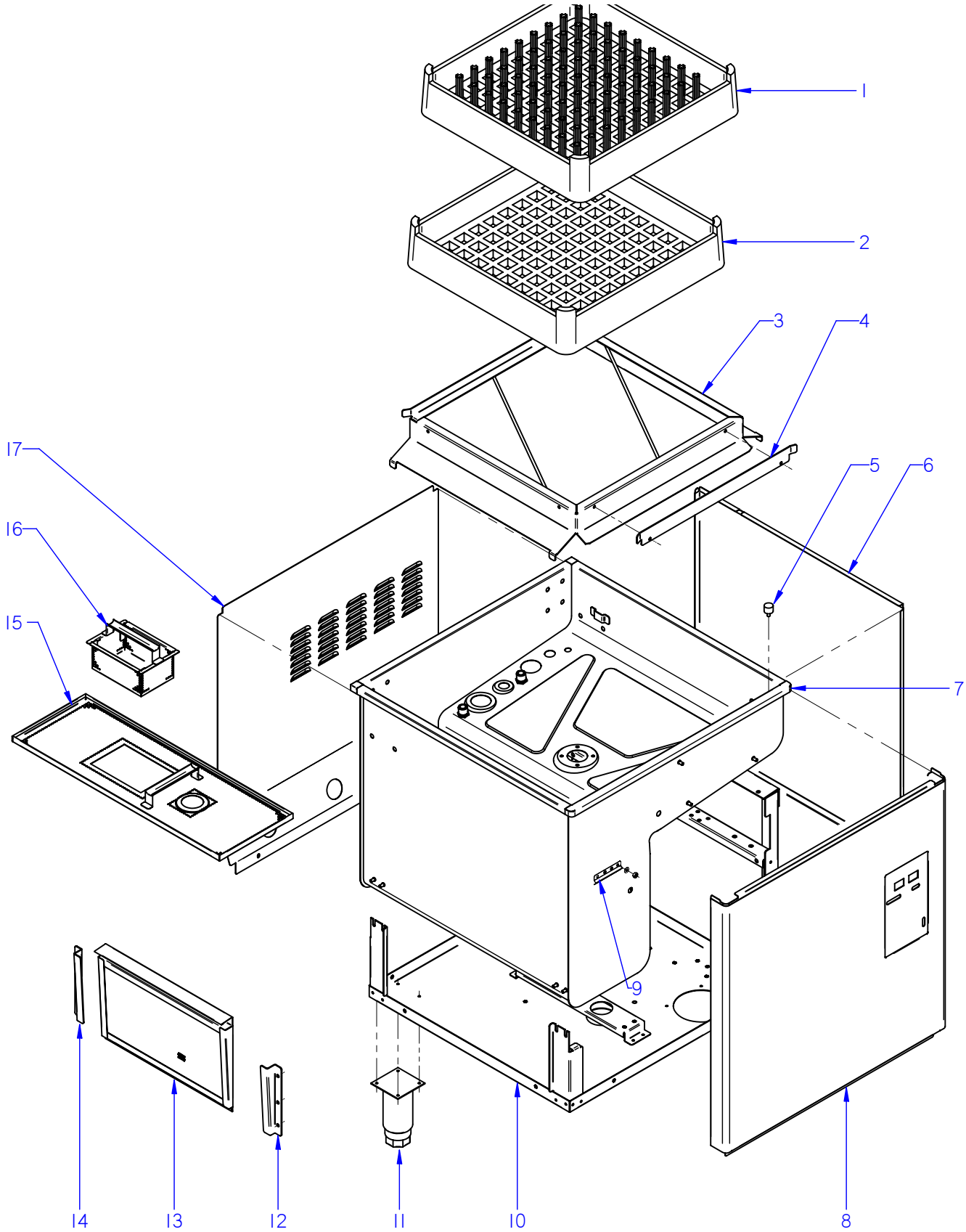

ITEM MARCADO EN COLOR = REPUESTO RECOMENDADO
COLOURED ITEM = RECOMMENDED SPARE PART

Nº plano / N º plane	Firma	Fecha / Date	Denominación / Denomination: MUEBLE / FITTING	Lamina / Sheet	
C-2826		2011-06	LAVAVAJILLAS AD-120 CW	1	Fagor Industrial S.Coop. FAGOR Oñate

MOD.	LAVAVAJILLAS / DISWASHER	ZONA / ZONE	MUEBLE / FITTING	PLANO DIAGRAM	C-2826

ITEM	CODIGO REFERENCE	DENOMINACION	DENOMINATION	AD-120 CW								ELIMINADO ELIMINATED	INTRODUCID. INTRODUCED	NOTAS
1	Z655302000	CESTILLO PLATOS CP-16-18	PLATE BASKET CP-16-18	2										
2	Z655301000	CESTILLO BASE CT-10	BASE BASKET CT-10	2										
3	Z710377000	BASE CESTILLO COMPLETA	COMPLETE BASKET BASE	1										
4	Z710326000	GUIA CESTILLO	BASKET GUIDE	1										
	Q152004000	TORNILLO APLAST. M5x13 A304	MUSHROOM HEAD BOLT M5x13 A	2										
	Q242030000	ARANDELA ABANICO A5 A.304	FAN WASHER A5 A.304	2										
	Q162030000	TUERCA EXAGONAL M5	HEXAGONAL NUT M5	2										
	Q308000000	ARANDELA DUBO A.8	DUBO A.8 WASHER	14										
5	Z710316000	AMORTIGUADOR	DAMPER	2										
	Q262040000	ARANDELA GROW. A6 A.304	WASHER GROW. A6 A.304	2										
	Q162040000	TUERCA EXAGONAL M6	HEXAGONAL NUT M6	2										
	Q012073000	TORNILLO EXAGONAL M12x20	HEXAGONAL BOLT M12x20	1										
	Q306024000	JUNTA 18x12.2x1.5	SEAL 18x12.2x1.5	1										
	Q162070000	TUERCA EXAGONAL M12	HEXAGONAL NUT M12	1										
6	Z749311000	PANEL LATERAL DERECHO	RIGHT SIDE PANEL	1										
	Q152004000	TORNILLO APLAST. M5x13 A304	MUSHROOM HEAD BOLT M5x13 A	2										
S/Nº	Z749312000	PANEL LATERAL IZQUIERDO	LEFT SIDE PANEL	1										
	Q152004000	TORNILLO APLAST. M5x13 A304	MUSHROOM HEAD BOLT M5x13 A	2										
7	Z728453000	CUBA COMPLETA AD-120CW	COMPLETE TUB AD-120CW	1										
	Q232040000	ARANDELA A6	WASHER A6	4										
	Q302022000	ARANDELA 16x6x1.2 A.304	WASHER 16X6X1.2 A.304	4										
	Q262040000	ARANDELA GROW. A6 A.304	WASHER GROW. A6 A.304	8										
	Q162040000	TUERCA EXAGONAL M6	HEXAGONAL NUT M6	8										
8	Z728450000	PANEL FRONTAL AD-120CW	COM. FRONT PANEL AD-120CW	1								19.10.11		
8	12041132	PANEL FRONTAL AD-W COMPLE.	FRONT PANEL AD-120CW	1									19.10.11	
S/Nº	Z206135000	CHECK LIST LAVAVAJILLAS FAGOR	CHECK LIST	1										
9	Z748008000	SOPORTE BULBO TERMOSTATO	THERMOSTAT BULB SUPPORT	1										
	Q162040000	TUERCA EXAGONAL M6	HEXAGONAL NUT M6	2										
	Q232040000	ARANDELA A6	WASHER A6	2										
	Q262040000	ARANDELA GROW. A6 A.304	WASHER GROW. A6 A.304	2										
10	Z749303000	ARMAZON COMPLETO	COMPLETE FRAME	1										

MOD.	LAVAVAJILLAS / DISWASHER	ZONA / ZONE	MUEBLE / FITTING	PLANO DIAGRAM	C-2826

ITEM	CODIGO REFERENCE	DENOMINACION	DENOMINATION	AD-120 CW								ELIMINADO ELIMINATED	INTRODUCID. INTRODUCED	NOTAS
11	X260151000	PATA REGULABLE	ADJUSTABLE LEG	4										
	Q411304000	REMACHE AVIBULB Ø4,8	AVIBULB RIVET Ø4.8	16										
12	Z710309000	GUIA FILTRO ANTERIOR	FRONT FILTER GUIDE	1										
	Q232040000	ARANDELA A6	WASHER A6	2										
	Q162040000	TUERCA EXAGONAL M6	HEXAGONAL NUT M6	2										
13	Z710907000	FILTRO COMPLETO	COMPLETE FILTER	1										
14	Z710310000	GUIA FILTRO POSTERIOR	REAR FILTER GUIDE	1										
	Q232040000	ARANDELA A6	WASHER A6	2										
	Q162040000	TUERCA EXAGONAL M6	HEXAGONAL NUT M6	2										
15	Z710801000	BANDEJA COMPLETA	COMPLETE TRAY	1										
16	Z710804000	RECOGEDOR DESPERDICIOS	WASTE COLLECTION	1										
17	Z742905000	PANEL POSTERIOR FI-80	REAR PANEL FI-80	1										
	3713500000	PERFIL CUBREARISTAS PLASTICO	PLASTIC EDGE COVER PROFILE	3										
	Q152004000	TORNIL, APLASTADO M5x13 A304	FLAT HEADED BOLT M5x13 A304	2										
	Z712911000	TOPE 80x80x20	BUFFER 80x80x20	6										

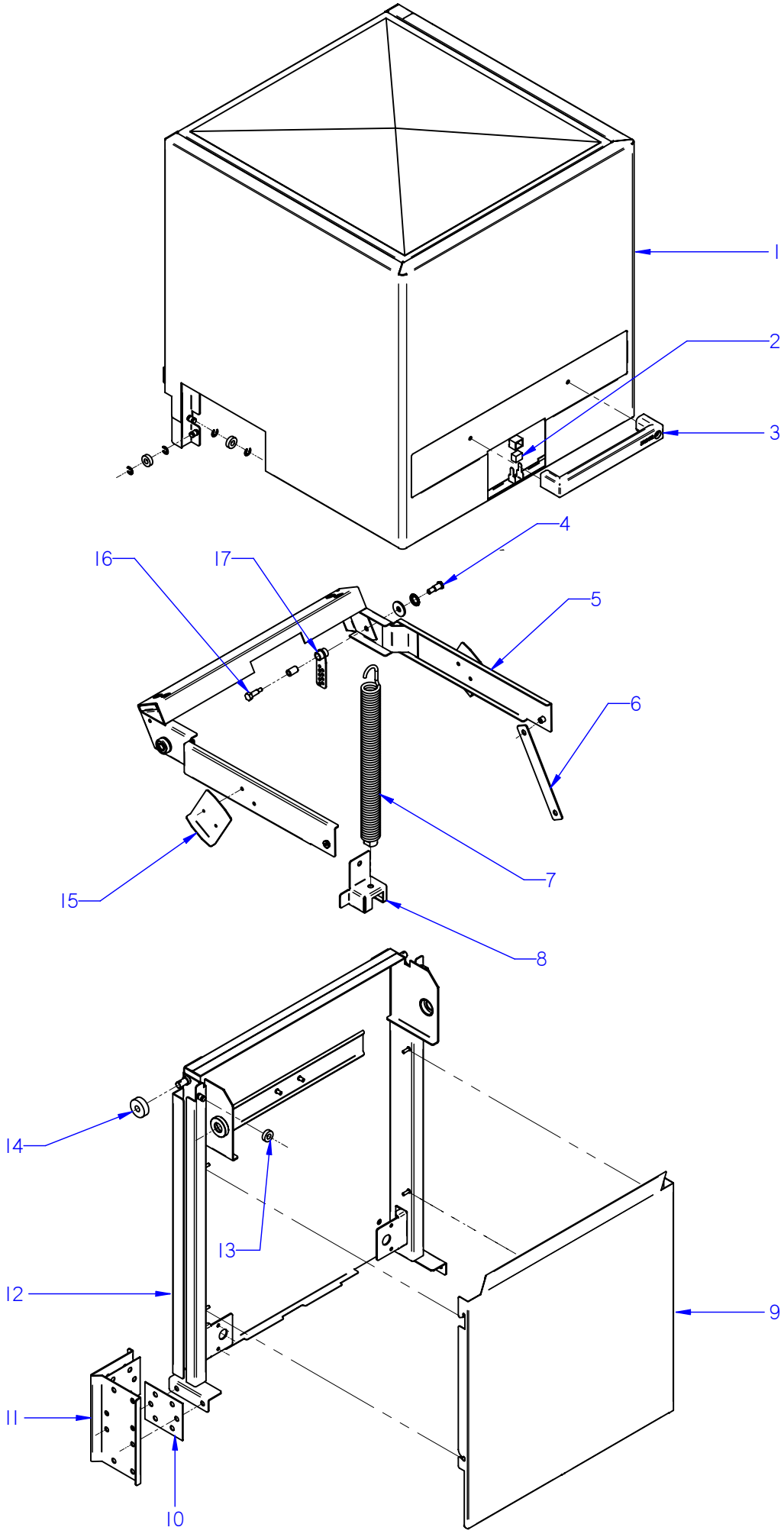

ITEM MARCADO EN COLOR = REPUESTO RECOMENDADO
COLOURED ITEM = RECOMMENDED SPARE PART

Nº plano / N º plane	Firma	Fecha / Date	Denominación / Denomination: CAPO / HOOD	Lamina / Sheet	
C-2827		2011-06	LAVAVAJILLAS AD-120 CW	2	Fagor Industrial S.Coop. FAGOR Oñate

MOD.	LAVAVAJILLAS / DISWASHER	ZONA / ZONE	CAPO / HOOD	PLANO DIAGRAM	C-2827

ITEM	CODIGO REFERENCE	DENOMINACION	DENOMINATION	AD-120 CW								ELIMINADO ELIMINATED	INTRODUCID. INTRODUCED	NOTAS
1	Z720518000	CAPOTA COMPL. AD-120C	COMPLETE HOOD AD-120C	1								01.05.12		
1	12044711	CAPOTA DP 0.8 COMPLETA	COMPLETE HOOD DP 0.8	1									01.05.12	
	Z710515000	CASQUILLO RODANTE	REVOLVING BUSHING	4										
	Q271006000	ARANDELA DE SEGURIDAD 8	SAFETY WASHER 8	8										
2	Z200506000	IMAN	MAGNET	1										
S/Nº	Z200507000	PROTECTOR IMAN	MAGNET PROTECTOR	1										
3	Z710558000	ASA CAPOTA AD	AD HOOD HANDLE	1										
	Q308002000	ARANDELA DUBO A6 NYLON	WASHER DUBO A6 NYLON	2										
4	Z710542000	EJE DE GIRO	ROTARY SHAFT	2										
S/Nº	Z710541000	RODAMIENTO 6200-2RS1	BEARING 6200-2RS1	2										
	Q308012000	ARANDELA 30x10x3	WASHER 30x10x3	2										
5	Z720533000	BALANCIN COMPLETO AD	COMPLETE ROCKER ARM AD	1										
	Q232050000	ARANDELA A8	WASHER A8	2										
	Q262050000	ARANDELA GROW. A8 A.304	WASHER GROW. A8 A.304	2										
	Q162050000	TUERCA EXAGONAL M8x1 INOX.	HEXAGONAL NUT M8x1 INOX.	2										
6	Z710523000	BIELA	ROD	2										
	Q308012000	ARANDELA 30x10x3	WASHER 30x10x3	8										
	Q232040000	ARANDELA A6	WASHER A6	4										
	Q262040000	ARANDELA GROW. A6 A.304	WASHER GROW. A6 A.304	4										
	Q012041000	TORNILLO EXAGON. M6x10 A.304	HEXAGONAL BOLT. M6x10 A.304	4										
7	Z720529000	CONJUNTO MUELLE	HOOK COMPLETE	2										
8	Z720525000	SOPORTE MUELLE INF DCH	HOOK RIGHT SUPPORT	1										
S/Nº	Z720526000	SOPORTE MUELLE INF IZQ	HOOK LEFT SUPPORT	1										
9	Z718932000	CUBIERTA RESORTES CLINIC	SPRING COVER	1										
10	Z710547000	JUNTA SOPORTE CAPO	HOOD SUPPORT SEAL	4										
	Q012053000	TORNILLO EXAGON. M8x20 A.304	HEXAGONAL BOLT. M8x20 A.304	10										
	Q013153000	TORNILLO EX M-8x20 LATON CRO.	HEX BOLT M-8x20 CHR. BRASS	4										
	Q232050000	ARANDELA A8	WASHER A8	14										
	Q262050000	ARANDELA GROW. A8 A.304	WASHER GROW. A8 A.304	14										
	Q162050000	TUERCA EXAG. M8x1 INOX.	HEXAG. SCREW M8x1 STAINLESS	10										
11	Z710539000	SOPORTE GUIA CAPO	HOOD GUIDE SUPPORT	2										

MOD.	LAVAVAJILLAS / DISWASHER	ZONA / ZONE	CAPO / HOOD	PLANO DIAGRAM	C-2827

ITEM	CODIGO REFERENCE	DENOMINACION	DENOMINATION	AD-120 CW								ELIMINADO ELIMINATED	INTRODUCID. INTRODUCED	NOTAS
12	Z720522000	GUIA CAPO COMPLETA AD-120C	COMPLETE HOOD GUIDE AD-12	1										
	Q352024000	PASADOR DE ALETA 4x25	WING PIN 4x25	2										
13	Z710515000	CASQUILLO RODANTE	REVOLVING BUSHING	2										
	Q271006000	ARANDELA DE SEGURIDAD 8	SAFETY WASHER 8	4										
14	Z710546000	CASQUILLO	BUSHING	2										
15	Z710548000	ESCUADRA TOPE	BUFFER BRACKET	2										
	Q012041000	TORNILLO EXAGON. M6X10 A.304	HEXAGONAL BOLT. M6X10 A.304	4										
	Q242040000	ARANDELA ABANICO	FAN WASHER	4										
16	Z720538000	EJE DE GIRO MUELLE	HOOK ROTARY SHAFT	2										
	Z720537000	COJINETE AUTOLUBRICADO AD	AUTOLUBRIC. BEARING	2										
S/Nº	Z720532000	AMARRE EJE MUELLE AD	SPRING SHAFT ANCHORAGE	2										
17	Z720536000	SOPORTE MUELLE COMPLETO	HOOK SUPPORT	2										

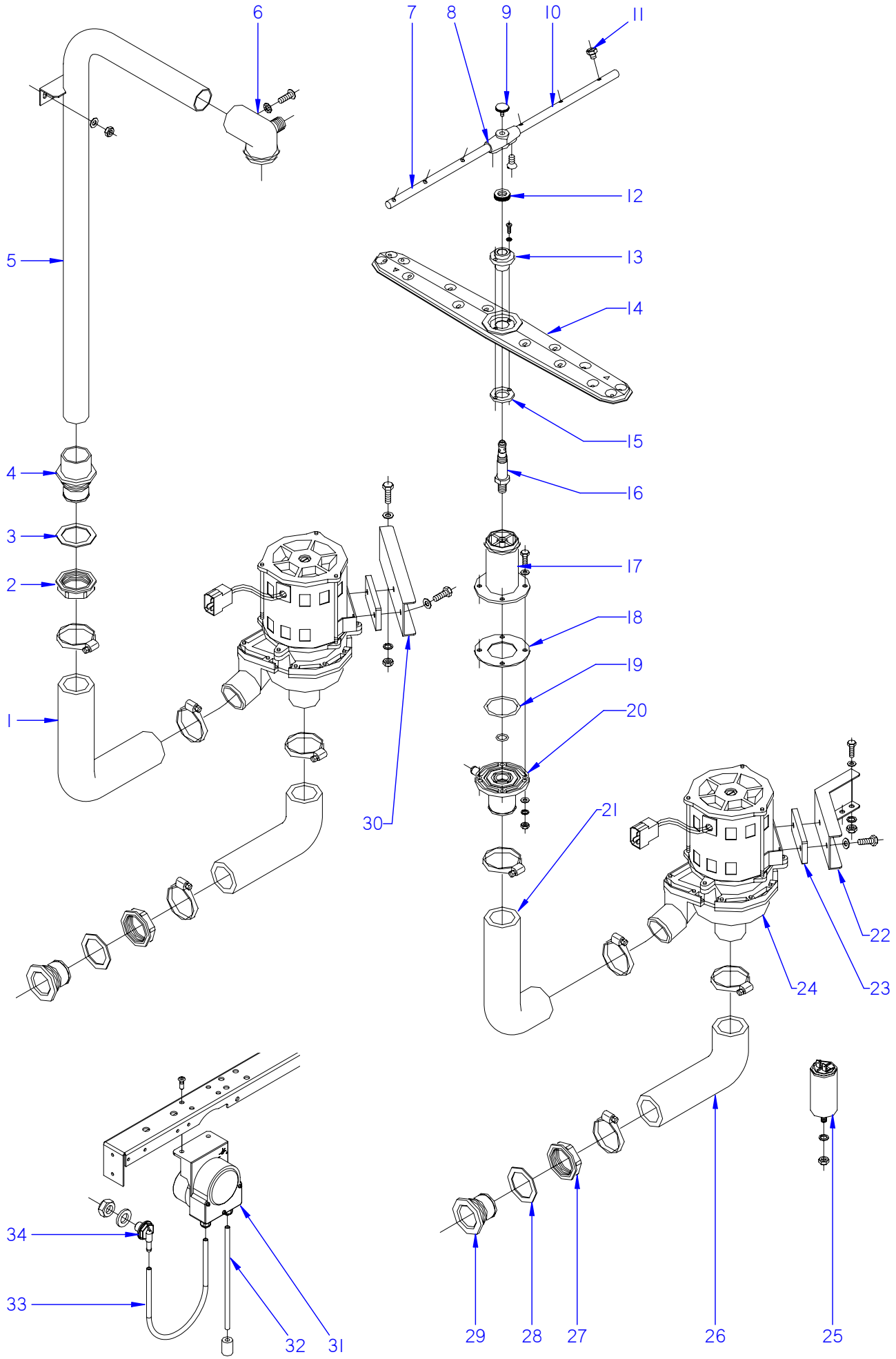

ITEM MARCADO EN COLOR = REPUESTO RECOMENDADO
COLOURED ITEM = RECOMMENDED SPARE PART

Nº plano / N º plane	Firma	Fecha / Date	Denominación / Denomination: FUNCIONAL LAVADO / WASH FUNCTIONAL	Lamina / Sheet	
C-2828		2011-06	LAVAVAJILLAS AD-120 CW	3	Fagor Industrial S.Coop. FAGOR Oñate

MOD.	LAVAVAJILLAS / DISWASHER	ZONA / ZONE	PARTE FUNCIONAL LAVADO WASH FUNCTIONAL PART	PLANO DIAGRAM	C-2828

ITEM	CODIGO CODE	DENOMINACION	NAME	AD-120 CW								ELIMINADO ELIMINATED	INTRODUCID. INTRODUCED	NOTAS
1	Z710906000	CONDUCTO IMPULSION POSTER.	REAR IMPULSE PIPE	1										
	Q881307000	ABRAZADERA 40-60	CLAMP 40-60	2										
2	Z710708000	TUERCA PASAMUROS	WALL BUSHING NUT	1										
3	Q307058000	ARANDELA 60x44x2	WASHER 60x44x2	1										
4	Z330790000	PASAMUROS IMPULSION PRELAV.	PREWASH IMPULSE BUSHING	1										
	Q307065000	JUNTA TORICA 43,01x33,77x2.62	O-RING 43,01x33,77x2.62	1										
5	Z710709000	ARBOL LAVADO COMPLETO	COMPLETE WASH CAM	1										
	Q232040000	ARANDELA A6	WASHER A6	2										
	Q162040000	TUERCA EXAGONAL M6	HEXAGONAL NUT M6	2										
6	Z710705000	SOPORTE DISTRIBUIDOR SUPER.	UPPER DISTRIBUTION SUPPORT	1										
	Q152004000	TORNILLO APLAST. M5x13 A.304	MUSHROOM HEAD BOLT M5x13 A	1										
	Q242030000	ARANDELA ABANICO A5 A.304	FAN WASHER A5 A.304	1										
7	Z201902000	RAMA ACLARADO IZQUIERDA	LEFT RINSE BRANCH	2										
8	Z201903000	SOPORTE RAMA ACLARADO COM.	COM. RINSE BRANCH SUPPORT	2										
	Q042021000	TORNILLO AVELLAN. M4x10 A304	COUNTERSUNK BOLT M4x10 A30	4										
9	Q152016000	TORNILLO ESPECIAL M.5x0.8	SPECIAL BOLT M.5X0.8	2										
10	Z201901000	RAMA ACLARADO DERECHA	RIGHT RINSE BRANCH	2										
11	Z211903000	TOBERA ACLARADO	RINSE NOZZLE	12										
12	Z680738000	TUERCA ESPECIAL	SPECIAL NUT	2										
13	Z710712000	CASQUILLO DISTRIBUIDOR	DISTRIBUTOR BUSHING	2										
	Q032011000	TORNILLO ALOMADO M3x10	CURVED SCREW M3X10	4										
	Q242010000	ARANDELA ABANICO A3 A.304	FAN WASHER A3 A.304	4										
14	Z710701000	DISTRIBUIDOR COMPLETO	COMPLETE DISTRIBUTOR	2										
15	Z710713000	ARANDELA AMARRE	ANCHORAGE WASHER	2										
16	Z710711000	EJE CENTRAL	CENTRAL SHAFT	2										
17	Z710704000	SOPORTE DISTRIBUIDOR INFER.	LOWER DISTRIBUTION SUPPORT	1										
18	Z710714000	JUNTA DE GOMA	RUBBER SEAL	1										
19	Q307057000	JUNTA TORICA 47.22x54.28x3.53	O-RING 47.22x54.28x3.53	1										
	Q307050000	JUNTA TORICA 13.94x19.18x2.6	O-RING 13.94x19.18x2.6	1										

MOD.	LAVAVAJILLAS / DISWASHER	ZONA / ZONE	PARTE FUNCIONAL LAVADO WASH FUNCTIONAL PART	PLANO DIAGRAM	C-2828

ITEM	CODIGO CODE	DENOMINACION	NAME	AD-120 CW								ELIMINADO ELIMINATED	INTRODUCID. INTRODUCED	NOTAS
20	Z710706000	PASAMUROS	BUSHING	1										
	Q012044000	TORNILLO EXAGONAL M6x25	HEXAGONAL BOLT M6x25	4										
	Q262040000	ARANDELA GROW. A6 A.304	WASHER GROW. A6 A.304	4										
	Q162040000	TUERCA EXAGONAL M6	HEXAGONAL NUT M6	4										
21	Z710905000	CONDUCTO IMPULSION ANTER.	FRONT IMPULSE PIPE	1										
	Q881307000	ABRAZADERA 40-60	CLAMP 40-60	2										
22	Z711001000	SOPOR. MOTOBOMBA ANTERIOR	SUPPORT FRONT MOTOR-PUMP	1										
	Q012042000	TORNILLO EXAGONAL M6x15	HEXAGONAL BOLT M6x15	2										
	Q262040000	ARANDELA GROW. A6 A.304	WASHER GROW. A6 A.304	2										
	Q162040000	TUERCA EXAGONAL M6	HEXAGONAL NUT M6	2										
23	Z201003000	BASE BOMBA LAVADO 1003016	WASH PUMP BASE 1003016	2										
	Q232040000	ARANDELA A6	WASHER A6	4										
24	Z203511000	BOMBA DE LAVADO 60 HZ.	WASH PUMP 60 HZ.	2										
25	V321300000	CONDENSADOR 10 M,F,	CONDENSER 10 M,F,	2										
	Q162050000	TUERCA EXAGONAL M8x1 INOX,	HEXAGONAL NUT M8x1 INOX.	2										
26	Z710904000	CONDUCTO ASPIRACION	EXTRACTOR PIPE	2										
	Q881307000	ABRAZADERA 40-60	CLAMP 40-60	4										
27	Z710708000	TUERCA PASAMUROS	WALL BUSHING NUT	2										
28	Q307058000	ARANDELA 60x44x2	WASHER 60x44x2	2										
29	Z710903000	PASAMUROS ASPIRACION	EXTRACTOR BUSHING	2										
30	Z711002000	SOPORTE MOTOBOMBA POSTER.	REAR MOTOR PUMP SUPPORT	1										
	Q012042000	TORNILLO EXAGONAL M6x15	HEXAGONAL BOLT M6x15	2										
	Q232040000	ARANDELA A6	WASHER A6	2										
	Q162040000	TUERCA EXAGONAL M6	HEXAGONAL NUT M6	2										
31	Z208903000	DOSIFIC. DGTE REGULABLE G300	DETERGENT DISP. ADJUST. G300	1										
32	Z448614000	CONDUCTO ASPIRACIÓN	EXTRACTOR PIPE	1										
	Z701152000	PESO FILTRO	FILTER WEIGHT	1										
33	3699300000	CONDUCTO DOSIF. TRANSP 6X4	DETERGENT DISP. EXTRACT.	1										
34	Z208927000	PASAMUROS DETERGENTE INOX	DETERGENT BUSHING	1										

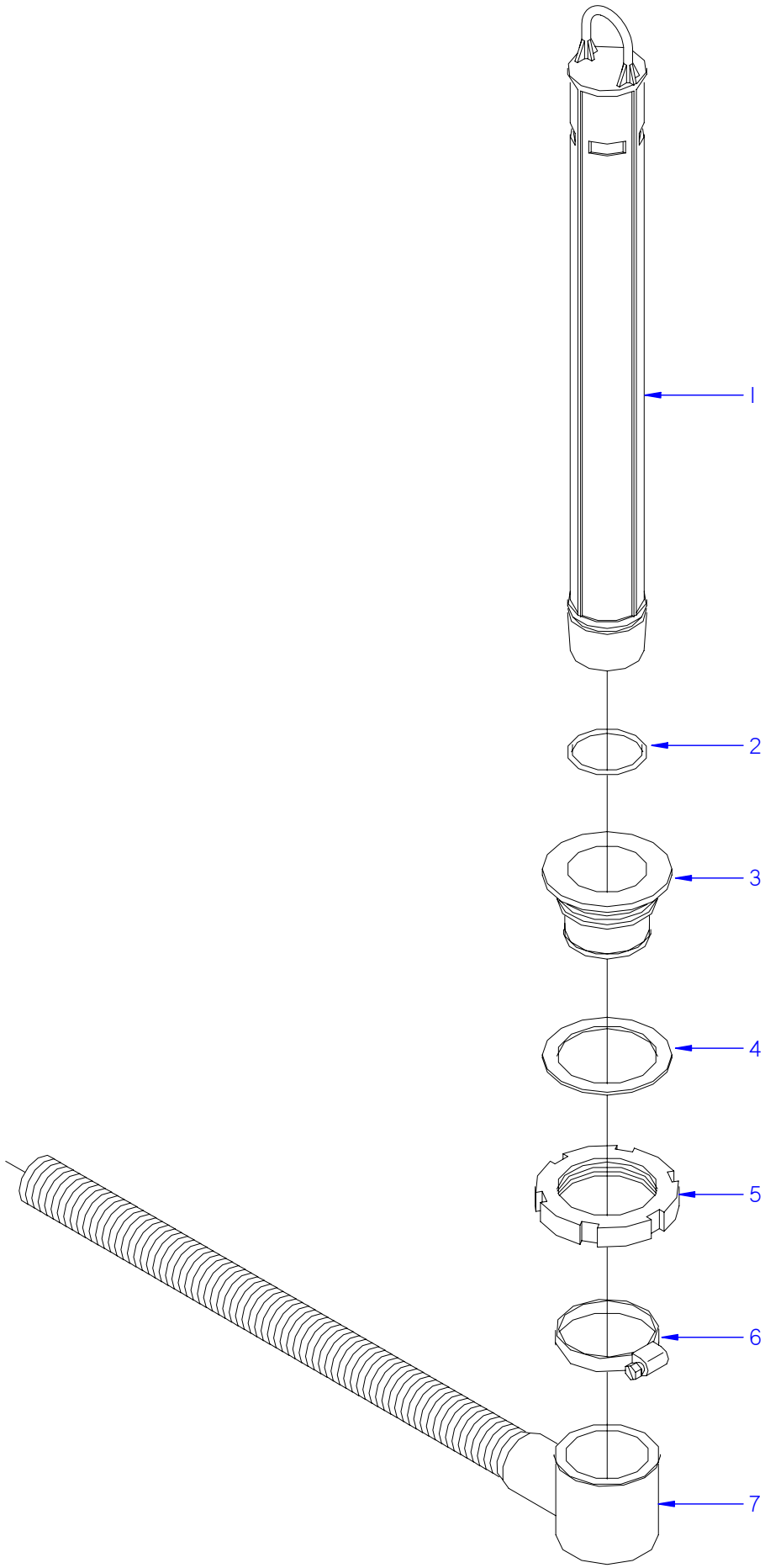

ITEM MARCADO EN COLOR = REPUESTO RECOMENDADO
COLOURED ITEM = RECOMMENDED SPARE PART

Nº plano / N º plane	Firma	Fecha / Date	Denominación / Denomination: FUNCIONAL DESAGÜE / DRAINAGE FUNCTIONAL	Lamina / Sheet	
C-2829		2011-06	LAVAVAJILLAS AD-120 CW	4	Fagor Industrial S.Coop. FAGOR Oñate

MOD.	LAVAVAJILLAS / DISWASHER	ZONA / ZONE	PARTE FUNCIONAL DESAGÜE DRAINAGE FUNCTIONAL PART	PLANO DIAGRAM	C-2829

ITEM	CODIGO REFERENCE	DENOMINACION	DENOMINATION	AD-120 CW								ELIMINADO ELIMINATED	INTRODUCID. INTRODUCED	NOTAS
1	Z710901000	ALIVIADERO	OVERFLOW	1										
2	Q307051000	JUNTA TOR.36.17X41.41X2.6	O-RING 36.17X41.41X2.6	1										
3	Z710902000	PASAMUROS DESAGUE	DRAINAGE BUSHING	1										
4	Q307059000	JUNTA 72x56x2	SEAL 72x56x2	1										
5	Q220001000	TUERCA RANURADA	GROOVED NUT	1										
6	Q881307000	ABRAZADERA 40-60	CLAMP 40-60	1										
7	Z200910000	MANGUERA DESAGUE	DRAINAGE HOSE	1										

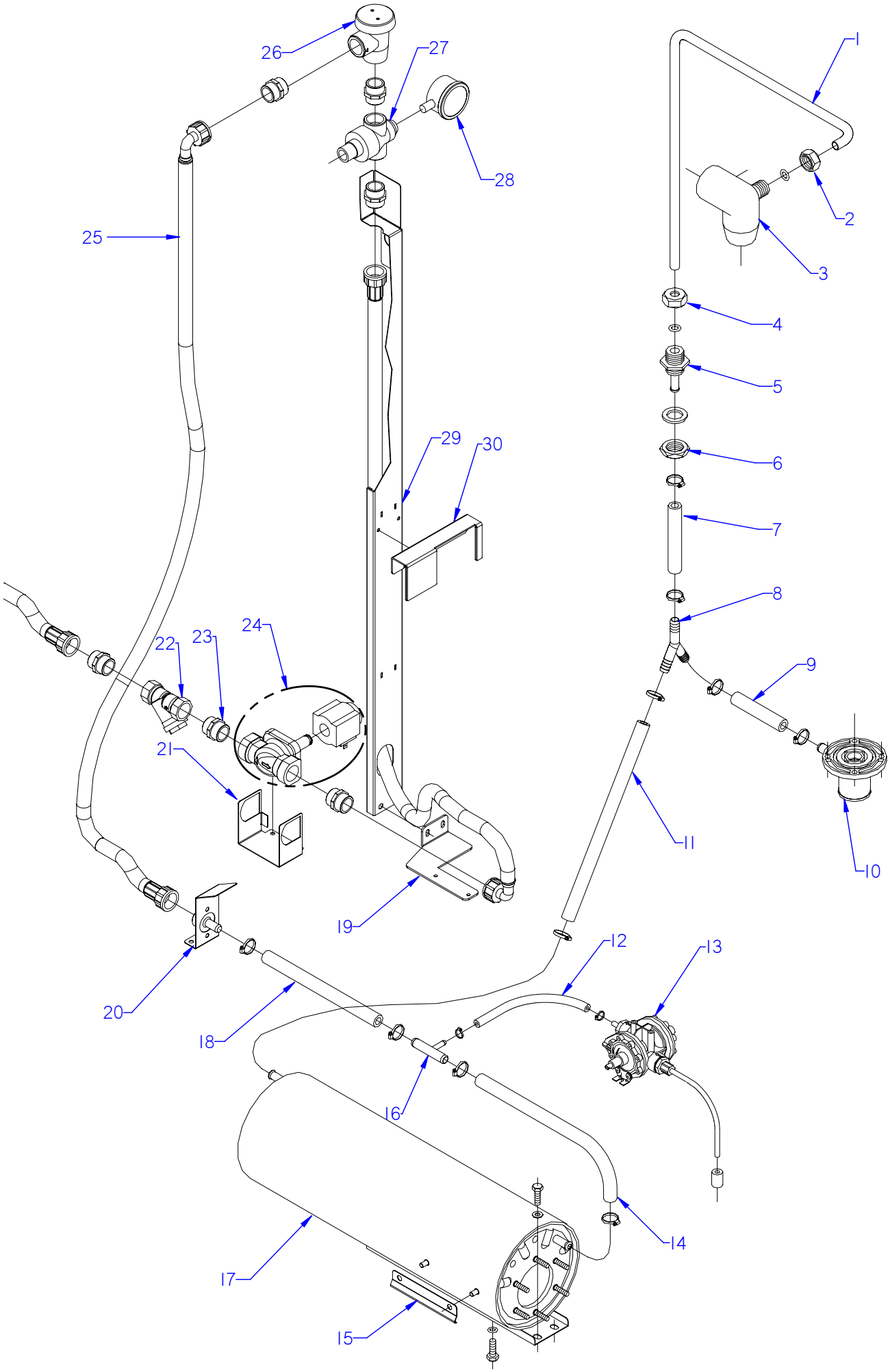

ITEM MARCADO EN COLOR = REPUESTO RECOMENDADO
COLOURED ITEM = RECOMMENDED SPARE PART

Nº plano / N º plane	Firma	Fecha / Date	Denominación / Denomination: FUNCIONAL ACLARADO / RINSE FUNCTIONAL	Lamina / Sheet	
C-2830		2011-06	LAVAVAJILLAS AD-120 CW	5	Fagor Industrial S.Coop. FAGOR Oñate

MOD.	LAVAVAJILLAS / DISWASHER	ZONA / ZONE	PARTE FUNCIONAL ACLARADO RINSE FUNCTIONAL PART	PLANO DIAGRAM	C-2830

ITEM	CODIGO REFERENCE	DENOMINACION	DENOMINATION	AD-120 CW								ELIMINADO ELIMINATED	INTRODUCID. INTRODUCED	NOTAS
1	Z711903000	CONDUCCION ACLARADO COMP.	COMP. RINSE PIPE	1										
2	Q223107000	TUERCA M.20x2.5	NUT M.20X2.5	1										
	Q307048000	JUNTA TORICA Ø9.12X16.18X3.53	O-RING Ø9.12X16.18X3.53	1										
3	Z710705000	SOPORTE DISTRIBUIDOR SUPER.	UPPER DISTRIBUTION SUPPORT	1										
	Q152004000	TORNILLO APLAST. M5x13 A.304	MUSHROOM HEAD BOLT M5x13 A	1										
	Q242030000	ARANDELA ABANICO A5 A.304	FAN WASHER A5 A.304	1										
4	Q223107000	TUERCA M.20x2.5	NUT M.20X2.5	1										
	Q307048000	JUNTA TORICA Ø9.12X16.18X3.53	O-RING Ø9.12X16.18X3.53	1										
5	Z711904000	PASAMUROS ACLARADO	RINSE BUSHING	1										
	Q307032000	JUNTA Ø 32X21X3	SEAL Ø 32X21X3	1										
6	Q223023000	TUERCA EXAGONAL 5-8 LATON	HEX NUT 5-8 BRASS	1										
7	3676900000	TUBO GOMA NEGRA Ø 17*10	BLACK RUBBER PIPE Ø 17*10	1										
	Q881302000	ABRAZADERA 12-20	CLAMP 12-20	2										
8	Z201106000	RACORD EN Y	Y-CONNECTION	1										
9	3676900000	TUBO GOMA NEGRA Ø 17*10	BLACK RUBBER PIPE Ø 17*10	1										
	Q881302000	ABRAZADERA 12-20	CLAMP 12-20	2										
10	Z710706000	PASAMUROS	BUSHING	1										
	Q012044000	TORNILLO EXAGONAL M6x25	HEXAGONAL BOLT M6x25	4										
	Q306050000	ARANDELA 6x12x1.5	WASHER 6x12x1.5	4										
	Q232040000	ARANDELA A6	WASHER A6	4										
	Q262040000	ARANDELA GROW. A6 A.304	WASHER GROW. A6 A.304	4										
	Q162040000	TUERCA EXAGONAL M6	HEXAGONAL NUT M6	4										
11	3676900000	TUBO GOMA NEGRA Ø 17*10	BLACK RUBBER PIPE Ø 17*10	1										
	Q881302000	ABRAZADERA 12-20	CLAMP 12-20	2										
12	3704000000	TUBO GOMA NEGRO Ø10,5*5	BLACK RUBBER PIPE Ø 10.5*5	1										
	Q881308000	ABRAZADERA 8-14L	CLAMP 8-14L	2										
13	Z211109000	DOSIFICADOR TENSOACTIVO N-6	SURFACE ACT. DISP. N-6	1										
S/Nº	Z448618000	CONDUCTO ABRILLANTADOR	RINSE AID PIPE	1										
S/Nº	Z701152000	PESO FILTRO	FILTER WEIGHT	1										
14	3676900000	TUBO GOMA NEGRA Ø 17*10	BLACK RUBBER PIPE Ø 17*10	1										
	Q881302000	ABRAZADERA 12-20	CLAMP 12-20	2										

MOD.	LAVAVAJILLAS / DISWASHER	ZONA / ZONE	PARTE FUNCIONAL ACLARADO RINSE FUNCTIONAL PART	PLANO DIAGRAM	C-2830

ITEM	CODIGO REFERENCE	DENOMINACION	DENOMINATION	AD-120 CW								ELIMINADO ELIMINATED	INTRODUCID. INTRODUCED	NOTAS
15	Z748008000	SOPORTE BULBO TERMOSTATO	THERMOSTAT BULB SUPPORT	1										
	Q232040000	ARANDELA A-6	WASHER A6	1										
	Q162040000	TUERCA EXAGONAL M-6	HEXAGONAL NUT M6	1										
	Q262040000	ARANDELA GROW. A6 A.304	WASHER GROW. A6 A.304	1										
16	Z601157000	TOMA PRESION	PRESSURE INTAKE	1										
17	12022943	CALDERIN COMPLETO	COMPLETE DRUM	1										
	Q012031000	TORNIL. EXAGONAL M5x10 A.304	HEXAGONAL BOLT M5X10 A.304	2										
	Q232030000	ARANDELA A5	WASHER A5	2										
	Q012063000	TORNIL. EXAGONAL M10x20 A.304	HEXAGONAL BOLT M10x20 A.304	1										
	Q307048000	JUNTA TORICA Ø9.12X16.18X3.53	O-RING Ø9.12X16.18X3.53	1										
18	3676900000	TUBO GOMA NEGRA Ø 17*10	BLACK RUBBER PIPE Ø 17*10	1										
	Q881302000	ABRAZADERA 12-20	CLAMP 12-20	2										
19	Z718448000	SOPORTE W INF AR	W INF AR SUPPORT	1										
	Q411304000	REMACHE AVIBULB.Ø4,8	AVIBULB.Ø4,8 RIVET	4										
	Q152004000	TORNILLO APLAST. M5x13 A.304	FLAT HEADED BOLT M5x13	2										
20	Z718414000	EMPALME COMPLETO 3/4	CONNECTION 3/4	1										
21	Z718449000	SOPORTE EV W	EV W SUPPORT	1										
22	Z102308000	FILTRO 3/4	FILTER 3/4	1										
23	Z102301000	MANGUITO 3/4"	HOSE 3/4"	6										
24	Z718415000	ELECTROVALVULA USA	ELECTROVALVE USA	1										
	Z718445000	BOBINA USA	BOBBIN USA	1										
25	Z602121000	MANGUERA ENTRADA AGUA	WATER INTAKE HOSE	3										
	Q012031000	TORNIL. EXAGONAL M5x10 A.304	HEXAGONAL BOLT M5X10 A.304	2										
	Q232030000	ARANDELA A5	WASHER A5	2										
26	Z718418000	VALVULA ANTIRRETORNO W	CHECK VALVE W	1										
27	Z102307000	REDUCTOR PRESION	PRESSURE REDUCER	1										
28	Z271125000	MANOMETRO W NSF	MANOMETER W NSF	1										
29	Z718447000	SOPORTE W ANTIRRETORNO	W CHECK SUPPORT	1								27.02.12		
29	12044032	SOPORTE ANTIRRETORNO W	CHECK SUPPORT W	1									27.02.12	
	3713500000	PERFIL CUBREARISTAS PLASTICO	PLASTIC EDGE COVER PROFILE	1										
30	Z718440000	SEPARADOR CONDUCCION W	W DRIVING SPACER	1										

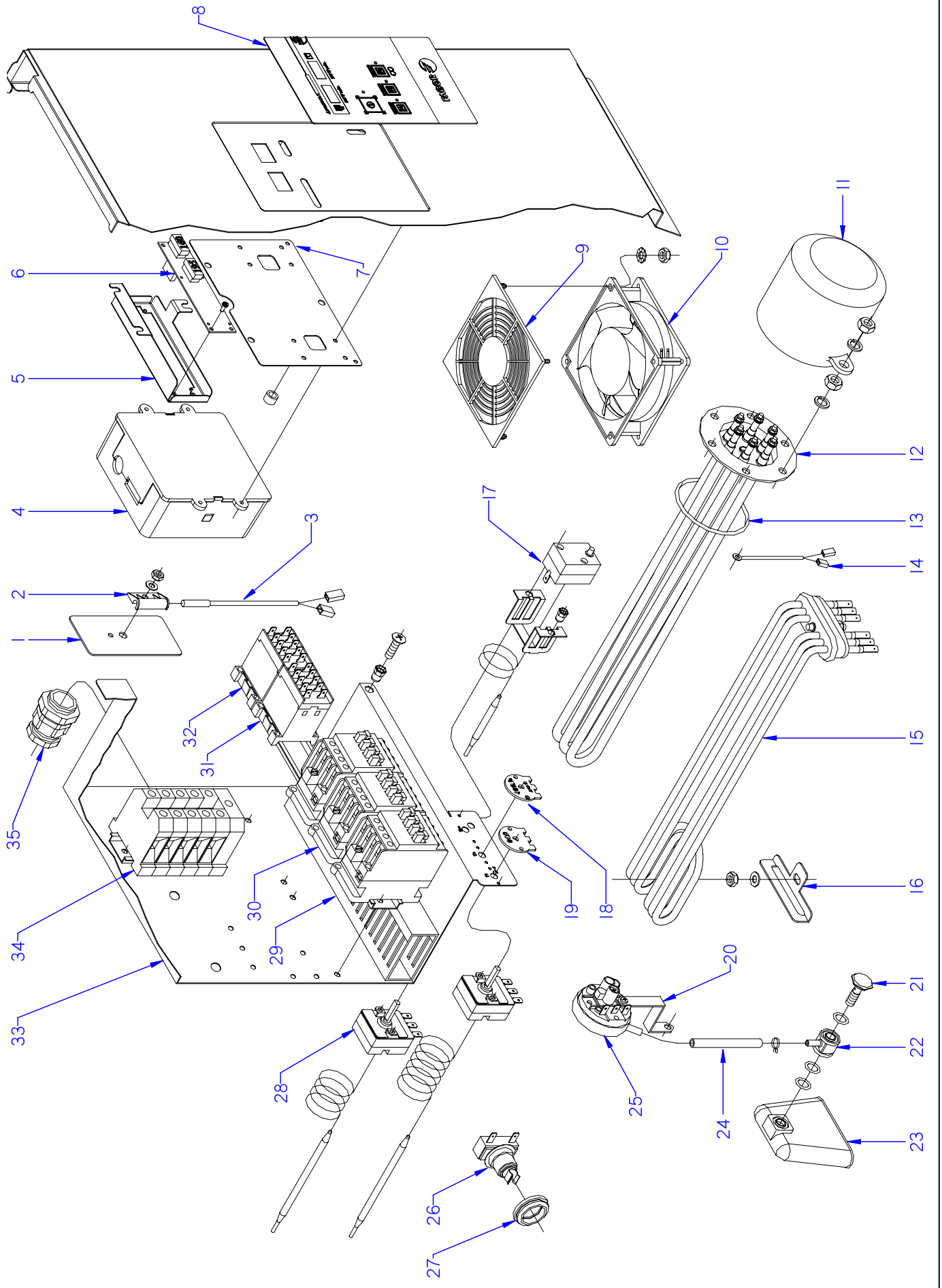

ITEM MARCADO EN COLOR = REPUESTO RECOMENDADO
COLOURED ITEM = RECOMMENDED SPARE PART

Nº plano / N º plane	Firma	Fecha / Date	Denominación / Denomination: FUNCIONAL ELECTRICA / ELECTRICS FUNCTIONAL	Lamina / Sheet	
C-2831		2011-06	LAVAVAJILLAS AD-120 CW	6	Fagor Industrial S.Coop. FAGOR Oñate

MOD.	LAVAVAJILLAS / DISWASHER	ZONA / ZONE	PARTE FUNCIONAL ELECTRICA ELECTRICS FUNCTIONAL PART	PLANO DIAGRAM	C-2831

ITEM	CODIGO REFERENCE	DENOMINACION	DENOMINATION	AD-120 CW								ELIMINADO ELIMINATED	INTRODUCID. INTRODUCED	NOTAS
1	Z101211000	APOYO INTERRUPTOR	SWITCH SUPPORT	1										
2	Z203010000	AMARRE INTERRUPTOR MAGNET.	MAGNETIC SWITCH FASTENER	1										
	Q232040000	ARANDELA A-6	WASHER A-6	1										
	Q162040000	TUERCA EXAGONAL M-6	HEXAGONAL NUT M-6	1										
3	Z203009000	INTERRUPTOR MAGNETICO	MAGNETIC SWITCH	1										
4	Z213073000	TARJETA 5 RELES	5 RELAY CARD	1										
	Q232020000	ARANDELA A4	WASHER A4	4										
	Q242020000	ARANDELA ABANICO A5 A.304	FAN WASHER A5 A.304	4										
	Q042022000	TORN. AVELLANADO M4X15	HEXAGONAL COUNTERSUNK M4	4										
	Z515045000	CASQUILLO SEPARADOR B	SEPARATOR BUSHING B	4										
5	Z728451000	SOPOR. DISPLAY CAPOTA AD CW	HOOD DISPLAY SUPPORT	1										
6	Z218433000	DISPLAY Tª ADVANCE W	ADVANCE W DISPLAY Tª	1										
7	Z713027000	SOPORTE PROGRAMADOR RELÉ	RELAY PROGRAMMER SUPPORT	1										
8	Z728448000	EMBELLEC. ADHESIVO AD-120 CW	ADHES. TRIM AD-120 CW	1										
9	Z713015000	PROTECCION VENTILADOR ABS	FAN PROTECTION ABS	1										
	Q042022000	TORNILLO AVELLANADO M4x15	COUNTERSUNK BOLT M4x15	8										
	Q162020000	TUERCA EXAGONAL M4	HEXAGONAL NUT M4	12										
	Q242020000	ARANDELA ABANICO A-4 A304	FAN WASHER A-4 A304	8										
10	Z103066000	VENTILADOR 230V,50/60 HZ	FAN 230V,50/60 HZ	1										
11	Z651731000	CAPERUZA RESISTEN. CALDERIN	DRUM RESIST. CAP	1										
	Q163140000	TUERCA EXAGONAL M6 LATON	HEXAGONAL NUT M6 BRASS	2										
	Q012031000	TORNIL. EXAGONAL M5x10 A.304	HEXAGONAL BOLT M5X10 A.304	2										
	Q232030000	ARANDELA A-5	WASHER A-5	2										
12	Z721703000	RESISTENCIA CALDERIN W	DRUM RESISTOR W	1										
	Q221305000	TUERCA EX, AUTO. M4 ZINCADA	HEX NUT , AUTO. M4 ZINC-COAT	6										
	Q163140000	TUERCA EXAGONAL M6 LATON	HEXAGONAL NUT M6 BRASS	6										
	Q262040000	ARANDELA GROW. A6 A,304	WASHER GROW. A6 A.304	6										
13	Q307048000	JUNTA TORICA 9.12x16.18x3.53	O-RING Ø9.12X16.18X3.53	1										
14	Z268004000	SONDA TEMPERATURA GICAR	TEMPERATURA PROBE GICAR	2								19.10.11		
14	Z713028000	CONJUNTO SONDA 64KOhmio NTC	64KOhmio NTC PROBE SET	2									19.10.11	

MOD.	LAVAVAJILLAS / DISWASHER	ZONA / ZONE	PARTE FUNCIONAL ELECTRICA ELECTRICS FUNCTIONAL PART	PLANO DIAGRAM	C-2831

ITEM	CODIGO REFERENCE	DENOMINACION	DENOMINATION	AD-120 CW								ELIMINADO ELIMINATED	INTRODUCID. INTRODUCED	NOTAS
S/Nº	Z718004000	AMARRE SONDA	PROBE CATCH	1								19.10.11		
	Q162020000	TUERCA EXAGONAL M4	HEXAGONAL NUT M4	1								19.10.11		
	Q242010000	ARANDELA ABANICO A.3 A304	FAN WASHER A.3 A304	1								19.10.11		
15	Z743601000	RESISTENCIA TANQUE	TANK RESISTOR	1										
16	Z743602000	SOPORTE RESISTENCIA TANQUE	TANK RESISTOR SUPPORT	1										
	Q232040000	ARANDELA A,6	WASHER A,6	1										
	Q162040000	TUERCA EXAGONAL M6	HEXAGONAL NUT M6	1										
17	Z213014000	LIMITADOR TECASA P.	LIMITER TECASA P.	1										
S/Nº	Z203060000	AMARRE LIMITADOR TECASA	LIMITER FASTENING TECASA	1										
	Q221341000	REMACHE EXAGONAL M4	HEXAGONAL RIVET M4	2										
	Q152024000	TORNILLO AVELLANADO M4x8	COUNTERSUNK BOLT M4x8	2										
18	Z718446000	CHAPA W 85ºC	PLATE W 85ºC	1								19.10.11		
19	Z718952000	CHAPA BT 80C	PLATE BT 80C	1								19.10.11		
20	Z602923000	SOPORTE PRESOSTATO	PRESSURE SWITCH SUPPORT	1										
	Q082032000	TORNILLO ALOMADO BZ-3,5x9,5	CURVED SCREW BZ-3.5x9.5	1										
	Q162040000	TUERCA EXAGONAL M6	HEXAGONAL NUT M6	1										
	Q232040000	ARANDELA A6	WASHER A6	1										
21	Z203013000	TORNILLO PRESOSTATO	PRESSURE SWITCH BOLT	1										
22	Z203012000	EMPALME PRESOSTATO	PRESSURE SWITCH CONNEX	1										
	Q307003000	JUNTA TOR.16,01x10,77x2,62	O-RING 16.01x10.77x2.62	3										
23	Z203011000	CAMARA PRESOSTATO	PRESSURE SWITCH	1										
24	3702400000	TUBO DE GOMA 8x4 D8*4	RUBBER PIPE 8x4 D8*4	1										
	P102154000	BRIDA ELASTICA TUBO	ELASTIC PIPE FLANGE	2										
25	Z713002000	PRESOSTATO SIMPLE	SIMPLE PRESSURE SWITCH	1										
26	R213004000	TERMOSTATO REARME MANUAL	MANUAL RESET THERMOSTAT	1										
27	N503017000	SOPORTE TERMOSTATO 1001713	THERMOSTAT SUPPORT 1001713	2										
S/Nº	P443060000	TAPON	COVER	1										
28	Z203014000	TERMOSTATO CALDERIN	WASH DRUM THERMOSTAT	2								19.10.11		
28	12040858	TERMOSTATO 16A 85°C 6 801V UL	TERMOSTAT 16A 85°C 6 801V UL	1									19.10.11	
	Q152024000	TORNILLO AVELLANADO M4x8	COUNTERSUNK BOLT M4x8	2										

MOD.	LAVAVAJILLAS / DISWASHER	ZONA / ZONE	PARTE FUNCIONAL ELECTRICA ELECTRICS FUNCTIONAL PART	PLANO DIAGRAM	C-2831

ITEM	CODIGO REFERENCE	DENOMINACION	DENOMINATION	AD-120 CW								ELIMINADO ELIMINATED	INTRODUCID. INTRODUCED	NOTAS
29	3715520000	CANALETA UNEX 60,30,77	PIPING UNEX 60.30.77	3										
	Q419005000	REMACHE 4x8 ALMG3 / ALUMINIO	RIVET 4X8 ALMG3 / ALUMINIUM	4										
	Q221342000	REMACHE EXAGONAL M5	HEXAGONAL RIVET M5	1										
	Q232040000	ARANDELA A6	WASHER A6	2										
	Q162040000	TUERCA EXAGONAL M6	HEXAGONAL NUT M6	2										
	Q152004000	TORNILL, APLASTADO M5x13 A304	FLAT HEADED BOLT M5x13 A304	1										
	Z713035000	REGLETA 6 mm.	STRIP 6 mm.	1										
	Z103064000	BASE UNEX 1252	BASE UNEX 1252	2										
S/Nº	Z403016000	GUIA CONTACTOR L-100	CONTACTOR GUIDE L-100	1										
	R663055000	GUIA CONTACTOR L-120	CONTACTOR GUIDE L-120	1										
30	Z203050000	CONTAC. SIRIUS 3R 230V.50-60	CONTACT. SIRIUS 3R 230V.50-60	3										
31	Z213007000	CONTACTOR 230 V. 50-60 HZ	CONTACTOR 230 V. 50-60 HZ	1										
32	Z203062000	RELE 230V. 16A-60 HZ	RELAY 230V. 16A-60 HZ	1										
	Z103083000	GUIA CONTACTOR L-73	CONTACTOR GUIDE L-73	1										
33	Z713037000	CAJA CUADRO ELECTRICO	SWITCHBOARD BOX	1										
34	R263003000	BORNA PASO 35 MM.	STEP BORN 35 MM.	3										
	Z683070000	BORNA A TIERRA WEIDMULLER	TERMINAL TO EARTH WEIDMULL	1										
	Z683068000	SEÑALIZ.DEK-6WEIDMULLER	SIGNS DEK-6WEIDMULLER	1										
	R073005000	BORNAS PORTA FUSIBLES	FUSE HOLDER TERMINALS	2										
	R723015000	FUSIBLE CRISTAL 10A.	FUSE HOLDER TERMINALS	2										
	Z103083000	GUIA CONTACTOR L-73	CONTACTOR GUIDE L-73	1										
	12040923	BORNAS PORTA FUSIBLES 13A 4	FUSE HOLDER TERMINALS 13A	2									09.07.12	
	12040926	FUSIBLE 0,50A Ø5MM 20X5 UL	FUSE 0.50A UL 20X5 Ø5MM	4									09.07.12	
35	R023013000	PRENSA ESTOPAS	STUFFING BOX	1										

MOD.	LAVAVAJILLAS / DISWASHER	ZONA / ZONE	VARIOS / MISCELLANEOUS	PLANO DIAGRAM	

ITEM	CODIGO REFERENCE	DENOMINACION	DENOMINATION	AD-120 CW								ELIMINADO ELIMINATED	INTRODUCID. INTRODUCED	NOTAS
	Z71845700	FOLLETO INSTRUCCIO. AD-120 W	INSTRUCTION LEAFLET AD-120 V	1										
	Z713026000	ESQUEMA TEORICO AD	THEORETICAL DIAGRAM AD.	1										PLANO HC-18188
	Z713025000	PLANO DE MONTAJE AD	ASSEMBLY PLAN AD	1										PLANO HC-18187
	Z713036000	LEYENDA CAPOTA	HOOD LEGEND	1										PLANO HC-17400
	Z728004000	CABLEADO CONECT. SONDAS LC	GAUGE LC CONNECT. WIRING	1								19.10.11		
	Z218434000	CABLE CONEXI. DISPLAY W TARJ	DISPLAY CONNECTI. WIRING W	1										
	Z723012000	CABLEADO CALDERIN AD-120	DRUM AD-120 WIRING	1								19.10.11		
	12040952	CABLEADO UL	UL WIRING	1									19.10.11	
	Z713024000	INSTALACCION ELECTRICA AD	ELEC. INSTALATION AD	1								19.10.11		
	12991851	INSTALACCION ELECTRICA UL	ELEC. INSTALATION UL	1									19.10.11	
	Z208904000	CABLEADO DOSIFICADOR DTGTE	DOSEFOR DETERGEN. WIRING	1										

AD 120, AD 120 B, AD 120 B BT, AD 120 C, AD 120 HY, AD 120 W,
AD 100, AD 100 B, AD 100 B BT, AD 100 C, AD 100 HY, AD 100 W,
AD 90, AD 90 B, AD 90 B BT, AD 90 C, AD 90 HY, AD 90 W,

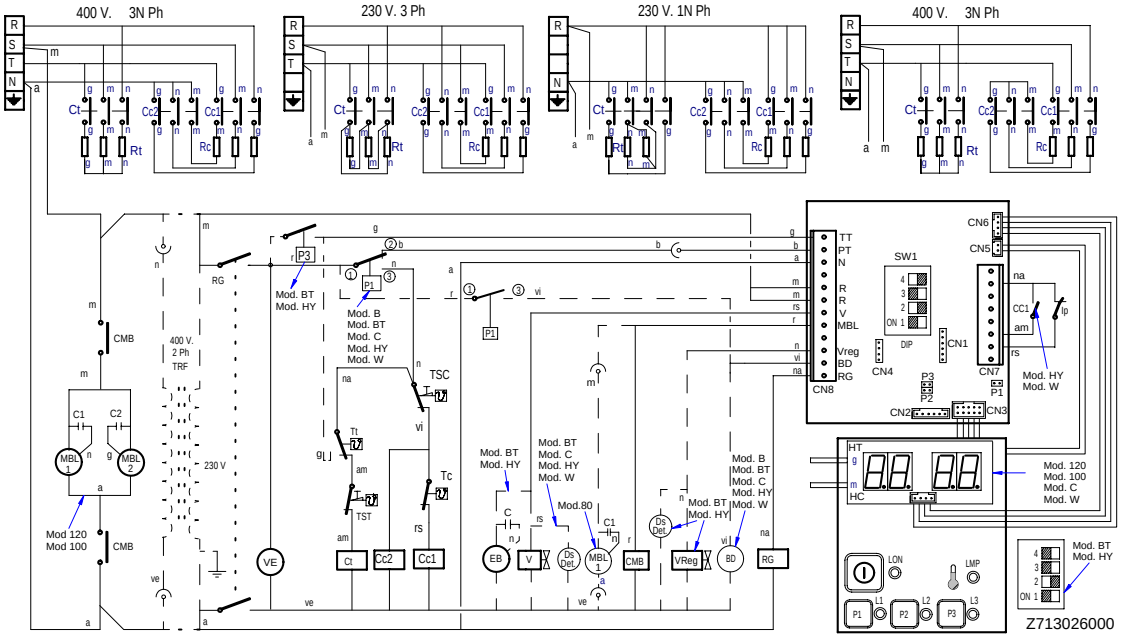

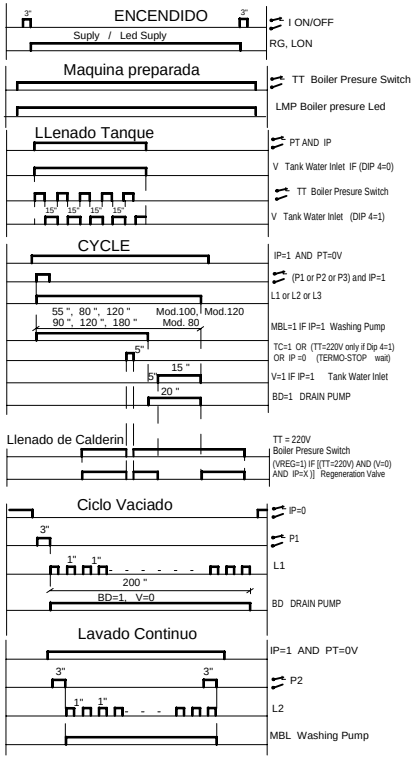

FAGOR ELECTRONICO MODELO ADVANCE	DIP1	DIP2	DIP3	DIP4	TIEMPOS CICLOS (sg.)
AD-90 , AD-90 DD	ON	OFF	OFF	OFF	P1=75 / P2= 120 / P3=180
AD-120, AD-120 B, AD- 120 C, ADE-120, ADE-120 B.	ON	OFF	ON	OFF	P1=55 / P2= 80 / P3=120 - ∞
AD-120 HY	ON	OFF	ON	ON	

DIP1 = ON, al cerrar la puerta o bajar capó el lavavajillas se pone en marcha.
DIP1= OFF, al cerrar la puerta o bajar el capo el lavavajillas sigue lavando **SÓLO SI EL CICLO NO HA ACABADO.**

DIP2 = ON, Para los modelos que llevan **DESCALCIFICADOR,** versiones **"D".**
DIP2 = OFF, para los modelos con **BOMBA DESAGÜE**, versiones **"B".**

DIP1 + DIP3 , con las diferentes combinaciones posibles configuramos los tiempos de ciclo.

DIP4 = ON, para los modelos versiones **CLINIC LINE "HY".**
DIP4 = OFF, para los modelos que **NO** son **CLINIC LINE "HY".**

-	Esquema teorico AD 120	-	-	Z713026000	-
Zk./Nº	Pieza	Cant.	Materiala/Material	Klas. zk/Nº Clas.	Gainazal akabera/Tratamiento
Zk./Nº	Aldaketa/Modificaciones		Nork proposatua/Propuesta de	Data/Fecha	Perdoi orokorrak Tolerancias generales
-	-		-	-	
-	-		-	-	< 5 ± 0.2 / 50 ÷ 100 ± 0.8
-	-		-	-	5 ÷ 25 ± 0.4 / >100± 1
-	-		-	-	25 ÷ 50 ± 0.6 / α ± 1
-	-		-	-	

	Sinadura/Firma	Data/Fecha
Marraztua/Dibujado	M.Maillo	30-05-2009
Proiektatua/Proyectado	M.Maillo	30-05-2009
Egiaztatua/Comprobado	Z.Altube	30-05-2009

FAGOR
Fagor Industrial,Koop.Elk, Mugatua

Gainazal perdoia Mecanizado superficial
–

Eskala/Escala
-

LAVAVAJILLAS

Plano hau ezin daiteke erabili, ez berriztatu, gure baimenik gabe.

Plano Zk./Plano Nº
HC - 18188

- Zk. ord. du
- Zk.gaitik ord.

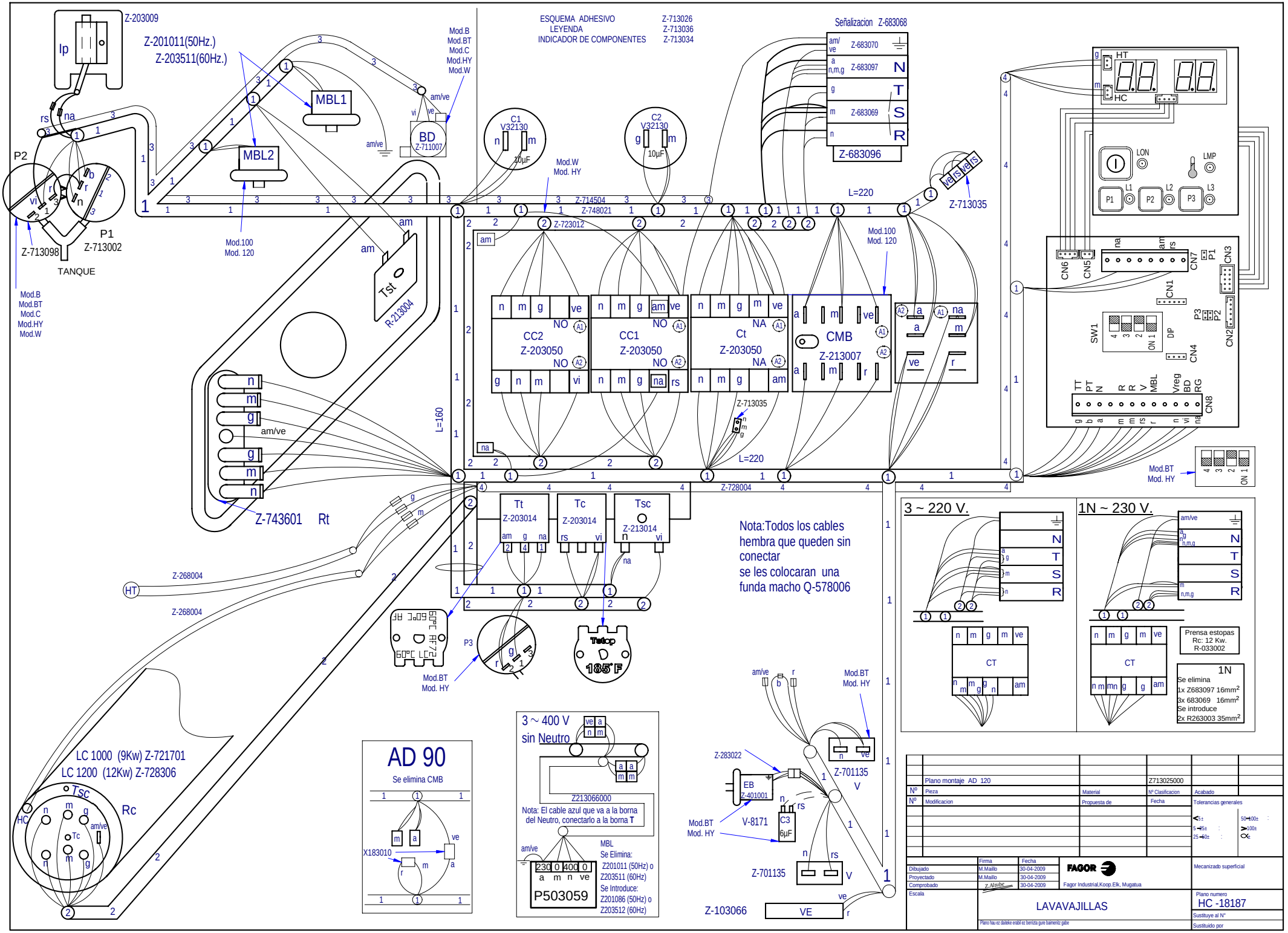

ESQUEMA ADHESIVO Z-713026
LEYENDA Z-713036
INDICADOR DE COMPONENTES Z-713034
Señalizacion Z-683068
Z-683070
Z-683097
Z-683069
Z-683096
Z-203009
Z-201011(50Hz.)
Z-203511(60Hz.)
MBL1
MBL2
BD
Z-711007
C1
V32130
C2
V32130
10µF
Mod.B
Mod.BT
Mod.C
Mod.HY
Mod.W
Mod.100
Mod. 120
P2
P1
Z-713098
Z-713002
TANQUE
Z-714504
Z-748021
Z-723012
Z-713035
L=220
L=160
Tst
R-213004
CC2
Z-203050
CC1
Z-203050
Ct
Z-203050
CMB
Z-213007
Z-743601 Rt
Z-728004
Tt
Z-203014
Tc
Z-203014
Tsc
Z-213014
Z-268004
HT
Nota:Todos los cables hembra que queden sin conectar se les colocaran una funda macho Q-578006
P3
Tstop
185°F
LC 1000 (9Kw) Z-721701
LC 1200 (12Kw) Z-728306
Tsc
Rc
HC
AD 90
Se elimina CMB
X183010
3 ~ 400 V
sin Neutro
Z213066000
Nota: El cable azul que va a la borna del Neutro, conectarlo a la borna T
MBL
Se Elimina:
Z201011 (50Hz) o
Z203511 (60Hz)
Se Introduce:
Z201086 (50Hz) o
Z203512 (60Hz)
P503059
Z-283022
EB
Z-401001
V-8171
C3
6µF
Z-701135
Z-103066
VE
3 ~ 220 V.
1N ~ 230 V.
CT
Prensa estopas
Rc: 12 Kw.
R-033002
1N
Se elimina
1x Z683097 16mm²
3x 683069 16mm²
Se introduce
2x R263003 35mm²
LON
LMP
HT
HC
SW1
DIP
CN1
CN2
CN3
CN4
CN5
CN6
CN7
CN8
Plano montaje AD 120
Z713025000
Nº Pieza
Nº Modificacion
Material
Propuesta de
Nº Clasificacion
Fecha
Acabado
Tolerancias generales
Dibujado M.Maillo 30-04-2009
Proyectado M.Maillo 30-04-2009
Comprobado 30-04-2009
Escala
Firma
Fecha
FAGOR
Fagor Industrial,Koop.Elk, Mugatua
Mecanizado superficial
LAVAVAJILLAS
Plano numero
HC -18187
Sustituye al Nº
Sustituido por

LEYENDA CAPOTA

	ESPAÑOL	FRANÇAIS	ENGLISH	DEUTSCH	ITALIANO
ⒶⒷⓒ	Puntos de conexion con R	Points de conexion R	Conecction point with R	Anschlußpunkte mit R	Punti di collegamento con R
BD	Bomba desagüe	Pompe de vidange	Drain pump	Abflußpumpe	Pompa scarico
C 1/2/3	Condensador	Condensateur	Condenser	Kondensator	Condensatore
CMB	Contactor bomba lavado	Contacteur pompe lavage	Wash pump contactor	Kontaktschütz Waschpumpe	Contattore pompa lavaggio
Cc 1/2	Contactor calentamiento calderin	Contacteur chauf. surchauffeur	Boiler heating contactor	Kontaktschütz Boilerheizung	Contattore riscaldamento boiler
Ct	Contactor calentamiento tanque	Contacteur chaufage cuve	Tank heating contactor	Kontaktschütz Heizung Tank	Contattore riscaldamento serbatoio
CP	Rele puerta	Relais porte	Door relay	Türrelais	Rele porta
Ds.Det.	Dosificador detergente	Dosseur de detergent	Detergent doser	Dosierer Spülmittel	Dosatore detersivo
E.B	Electrobomba de presion	Electropompe de pression	Electric pressure pump	Elektro-Drucksteigungspumpe	Electropompa pressione
IG	Interruptor general	Interrupteur general	Main switch	Hauptschalter	Interruttore generale
IP	Micro puerta	Micro porte	Door microswitch	Mikroschalter Tür	Micro porta
L1	Piloto de encendido	Voyant funcionement	Operation light	Betriebsanzeigelampe	Spia accensione
L2	Piloto marcha	Voyant demarrage	Start light	Startanzeigelampe	Spia avvio
L3	Piloto maquina preparada	Voyant machine prêt	Light machine ready	Betriebsbereitschaftsanzeigelampe	Pilota macchina preparata
MBL 1/2	Bomba lavado	Pompe lavage	Wash pump	Waschpumpe	Pompa lavaggio
M	Motor programador	Moteur du programmateur	Motor programmer	Motor Programmiervorrichtung	Motore programmatore
M Av. R	Motor program. avance rapido	Moteur du progr.avance rapide	Motor program. rapid advance	Motor Programmiervorrich. schneller Vorlauf	Motore programmatore avanzamento rapido
M1	Micro programador marcha	Micro du programm. de marche	Micro programmer on	Motor Programmiervorrich. Betrieb	Micro programma. di funzionamento
M2	Micro programador lavado	Micro du programm. de lavage	Micro programmer wash	Motor Programmiervorrich. Waschen	Micro programmatore di lavaggio
M3	Micro programador aclarado	Micro du programm. de rinçage	Micro programmer on	Motor Programmiervorrich. Spülen	Micro programmatore di risciacquo
M4	Micro programador Termo-stop	Micro du programm. Termo-stop	Micro programmer Termo-stop	Motor Programmiervorrich. Thermo-Stop	Micro programmatore Termo-stop
M5	Micro programador avance	Micro du programm. avance	Micro programmer advance	Motor Programmiervorrich. Vorlauf	Micro programmatore avanzamento
M6	Micro programador avance	Micro du programm. avance	Micro programmer advance	Motor Programmiervorrich. Vorlauf	Micro programmatore avanzamento
P, P1, P5	Presostato	Pressostat	Pressure switch	Druckwächter	Pressostato
P2, P3, P4	Presostato limitador	Pressostat de securité	Hi-limit pressure switch	Begrenzer Druckwächter	Pressostato limitatore
R	Rele de Generador de A.C.	Relais du Generateur	Generator rele	Relais Generator	Rele Generatore
ⓇⓃ	Toma de alimentac. Generador A.C.	Alimentation generateur	Water heater feeding	Stromversorgungsanschluß Gener.	Alimentazione generatore
RC	Resistencia calderin	Resistance surchauffeur	Boiler heating element	Heizwiderstand Boiler	Resistenza boiler
RT	Resistencia tanque	Resistance cuve	Tank heater	Heizwiderstand Tank	Resistenza serbatoio
Tt	Termostato tanque	Thermostat de cuve	Tank thermostat	Thermostat Tank	Termostato serbatoio
TC	Termostato calderin	Thermostat surchauffeur	Boiler thermostat	Thermostat kessel	Termostato boiler
Tst	Limitador tanque	Limitateur de cuve	Tank limiter	Begrenzer Tank	Limitatore serbatoio
TSC	Limitador calderin	Limiteur surchauffeur	Boiler Hi-limit	Begrenzer Boiler	Limitatore boiler
TSTP	Termostato termo-stop	Thermostat Termo-stop	Termo-stop Thermostat	Thermostat Termo-stop	Termostato Termo-stop
V	Electrovalvula llenado y aclarado	Electrovan. remplissage rinçage	Fill and rinse valve	Elektroventil Füllen und Spülen	Elettroval. riempimento e risciacquo
VE	Ventilador cuadro electrico	Ventilateur tableau electrique	Switchboard fan	Schalttafelventilator	Ventilatore quadro elettrico
COLOR	COLORES	COULEURS	COLOUR	FARBEN	COLORE
a =	Azul	Bleu	Blue	Blau	Blu
am =	Amarillo	Jaune	Yellow	Gelb	Giallo
am/ve =	Amarillo/verde	Jaune / vert	Yellow / green	Gelb/grün	Giallo/verde
b =	Blanco	Blanc	White	Weiß	Bianco
g =	Gris	Gris	Grey	Grau	Grigio
m =	Marrón	Marron	Brown	Braun	Marrone
n =	Negro	Noir	Black	Schwarz	Nero
na =	Naranja	Orange	Orange	Orange	Arancio
r =	Rojo	Rouge	Red	Rot	Rosso
rs =	Rosa	Rose	Pink	Rosa	Roseo
ve =	Verde	Vert	Green	Grün	Verde
vi =	Violeta	Violet	Purple	Violett	Viola

Z-713036