SIMAG

SD 23
SD 30

"J" SERIES

R 134 A VERSION

SPARE PARTS LIST
CATALOGO RICAMBI
CATALOGUE PIÈCES DÉTACHÉES
ERSATZTEILENKATALOG

090090.08 REV. 03/2007

PAGE PAGINA PAGE SEITE	TABLE OF CONTENTS	INDICE	TABLE DES MATIERES	INHALTVERZEICHNIS
1	TABLE OF CONTENTS	INDICE	TABLE DES MATIERES	INHALTVERZEICHNIS
2/3	UNIT PANELS	ASSIEME MOBILE	ENS. CAROSSERIE	MACHINE GEHAUSE
4/5	REFRIGERANT SYSTEM AIR COOLED	SISTEMA REFRIGERANTE RAFFR. AD ARIA	CIRCUIT FRIGORIFIQUE REFROID. A AIR	GEFRIERSYSTEM LUFTGEKUEHLT
6/7	REFRIGERANT SYSTEM WATER COOLED	SISTEMA REFRIGERANTE RAFFR. AD ACQUA	CIRCUIT FRIGORIFIQUE REFROID. A EAU	GEFRIERSYSTEM WASSERGEKUEHLT
8/9	WATER SYSTEM	CIRCUITO IDRAULICO	CIRCUIT HYDRAULIQUE	WASSER SYSTEM
10/11	CONTROL BOX	SCATOLA DI CONTROLLO	BOITE ELECTRIQUE	SCHALTSCHRANK
12	COMPRESSOR AND ELECTRIC COMPONENT CHARTS	TABELLA COMPRESSORI E COMPONENTI ELETTRICI	LISTE DES COMPRESSEURS ET COMPOSANTS ELECTRIQUE	KOMPRESSOR UND ELEKTRISCHER TEILLISTE

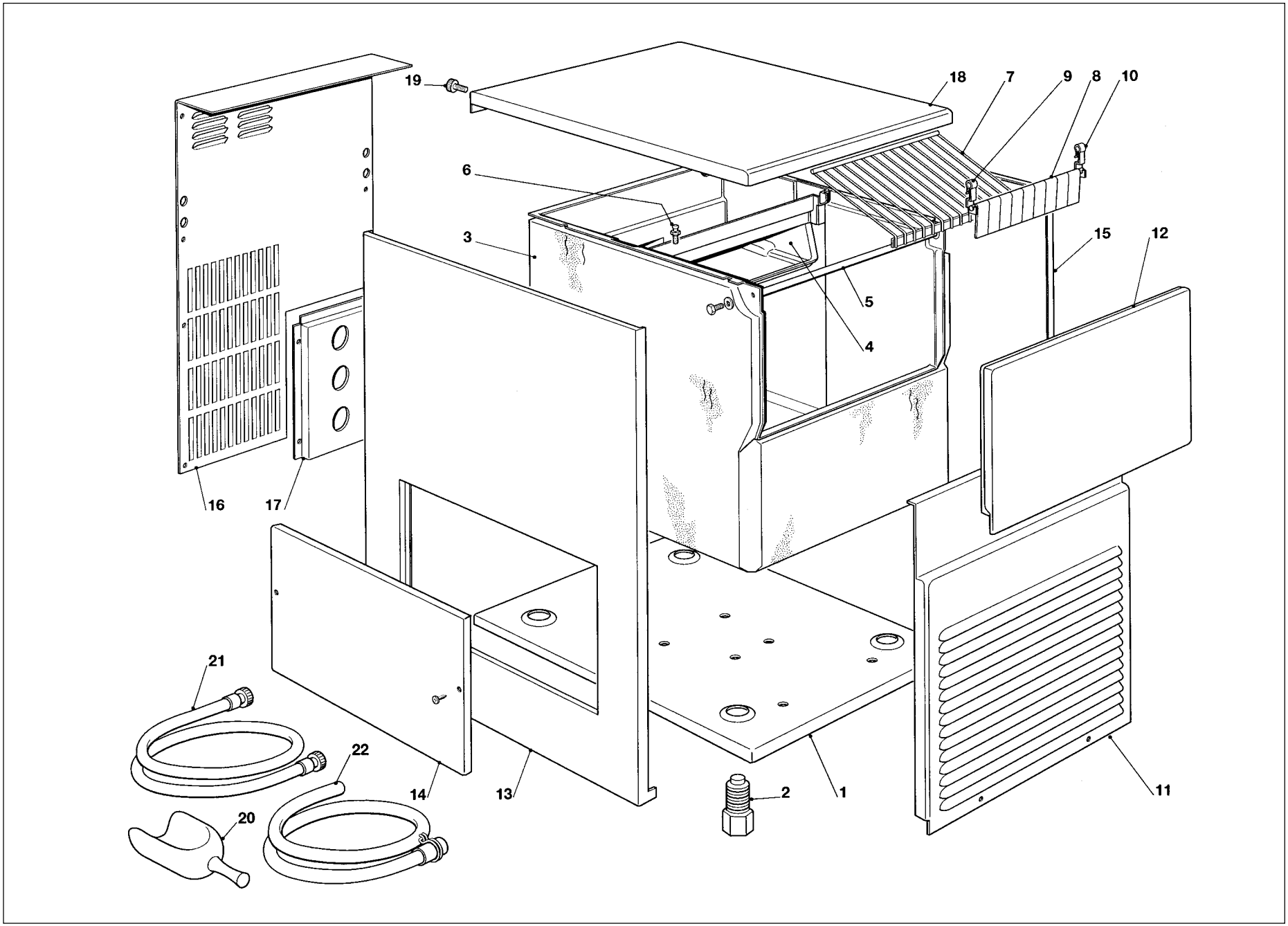
19
18
7
9
8
10
6
3
15
12
5
4
16
17
21
22
14
13
2
1
11
20

SD 23 - SD 30 - UNIT PANELS - ASSIEME MOBILE - ENS. CARROSSERIE - MACHINE GEHAUSE

ITEM NO POS NO REP. NO REF. NO	PART NO CODICE REFERENCE STUECK NR	DESCRIPTION	DESCRIZIONE	DESIGNATION	BESCHREIBUNG
1	702310 00 702338 00	BASE - SD 23 BASE - SD 30	PIASTRA DI BASE - SD 23 PIASTRA DI BASE - SD 30	PLAQUE DE BASE - SD 23 PLAQUE DE BASE - SD 30	GRUNDPLATTE - SD 23 GRUNDPLATTE - SD 30
2	650382 01 660638 00	LEG - SD 23 LEG - SD 30	PIEDE REGOLABILE - SD 23 PIEDE REGOLABILE - SD 30	PIED RÉGLABE - SD 23 PIED RÉGLABE - SD 30	GERÄTEFUSS - SD 23 GERÄTEFUSS - SD 30
3	782094 00R	INSULATED BIN ASSY	ASSIEME CELLA ISOLATA	ENS. CABINE	ISOLIEREISSPEICHER
4	660635 01	EVAPORATOR HOUSING	INVOLUCRO EVAPORATORE	CHAMBRE INTERIEUR	CELLE INTERN
5	732016 07	BIN DOOR BRACKET	ASTA PORTELLO	TIGE PORTE	KLAPPENACHSE
6	650697 00	STUD	PERNO	AXE	STIFT
7	650707 00	ICE DEFLECTOR	GRIGLIA SCORRIMENTO CUBETTI	GRILLE GLISSEMENT GLAÇON	ABGLEITGRILL
8	783171 01R	CURTAIN ASSY	ASSIEME TENDINA	ENS. LAMELLE	ABDECKKLAPPE GESAMTHEIT
9	660388 00	RIGHT CURTAIN SUPPORT	SUPP. TENDINA DESTRO	SUPP. LAMELLE DROITE	RECHTE ABDECKLAPPE HALTERUNG
10	660388 01	LEFT CURTAIN SUPPORT	SUPP. TENDINA SINISTRO	SUPP. LAMELLE GAUCHE	LINKE ABDECKLAPPE HALTERUNG
11	721822 00	FRONT PANEL S.S.	PANNELLO ANTERIORE INOX	PANNEAU AVANT ACIER INOX	VORDERWAND EDELSTAHL
12	782092 05	BIN DOOR	SPORTELLO	PORTE CABINE	SPEICHERTUER
13	721820 00	LEFT SIDE PANEL S.S.	PANNELLO SINISTRO INOX	JOUE GAUCHE ACIER INOX	LINKE GEHÄUSESEITE EDELSTAHL
14	702026 02	SERVICE PANEL	PANNELLO DI ISPEZIONE	PANNEAU DE SERVICE	SERVICE PANEL
15	721819 00	RIGHT SIDE PANEL S.S.	PANNELLO DESTRO INOX	JOUE DROITE ACIER INOX	RECHTEGEHÄUSESEITE EDELSTAHL
16	702303 00	REAR PANEL	PANNELLO POSTERIORE	PANNEAU POSTERIEUR	HINTERE ABDECKUNG
17	702301 00	METAL BRACKET FOR FITTING	SUPPORTO ATTACCHI	SUPPORT DE RACCORDS	METALLTRÄGER
18	781432 01	TOP PANEL S.S.	PANNELLO SUPERIORE INOX	ENS. COUVERCLE	DECKEL GESAMTHEIT
19	650806 00	REAR STUD	PERNO POSTERIORE	AXE ARRIÈRE	TRÄGER - HINTEN
20	650071 00	ICE SCOOP	SESSOLA	SASSE	EISSCHAUFEL
21	060513 00	KIT WATER SUPPLY PIPE	KIT TUBO ALIM. ACQUA	KIT TUYAU D'ALIM. EAU	WASSERANSCHLUSSCHLAUCH
22	060513 01	KIT WATER DRAIN PIPE	KIT TUBO SCARICO ACQUA	KIT TUYAU VIDANGE EAU	WASSERSLAUFSCHLAUCH
*	650805 00	SIMAG LOGO	TARGHETTA SIMAG	EMBLEME SIMAG	SIMAG ABGEBILDET
*	650805 12	SD 23 LOGO	TARGHETTA SD 23	EMBLEME SD 23	SD 23 ABGEBILDET
*	650805 13	SD 30 LOGO	TARGHETTA SD 30	EMBLEME SD 30	SD 30 ABGEBILDET

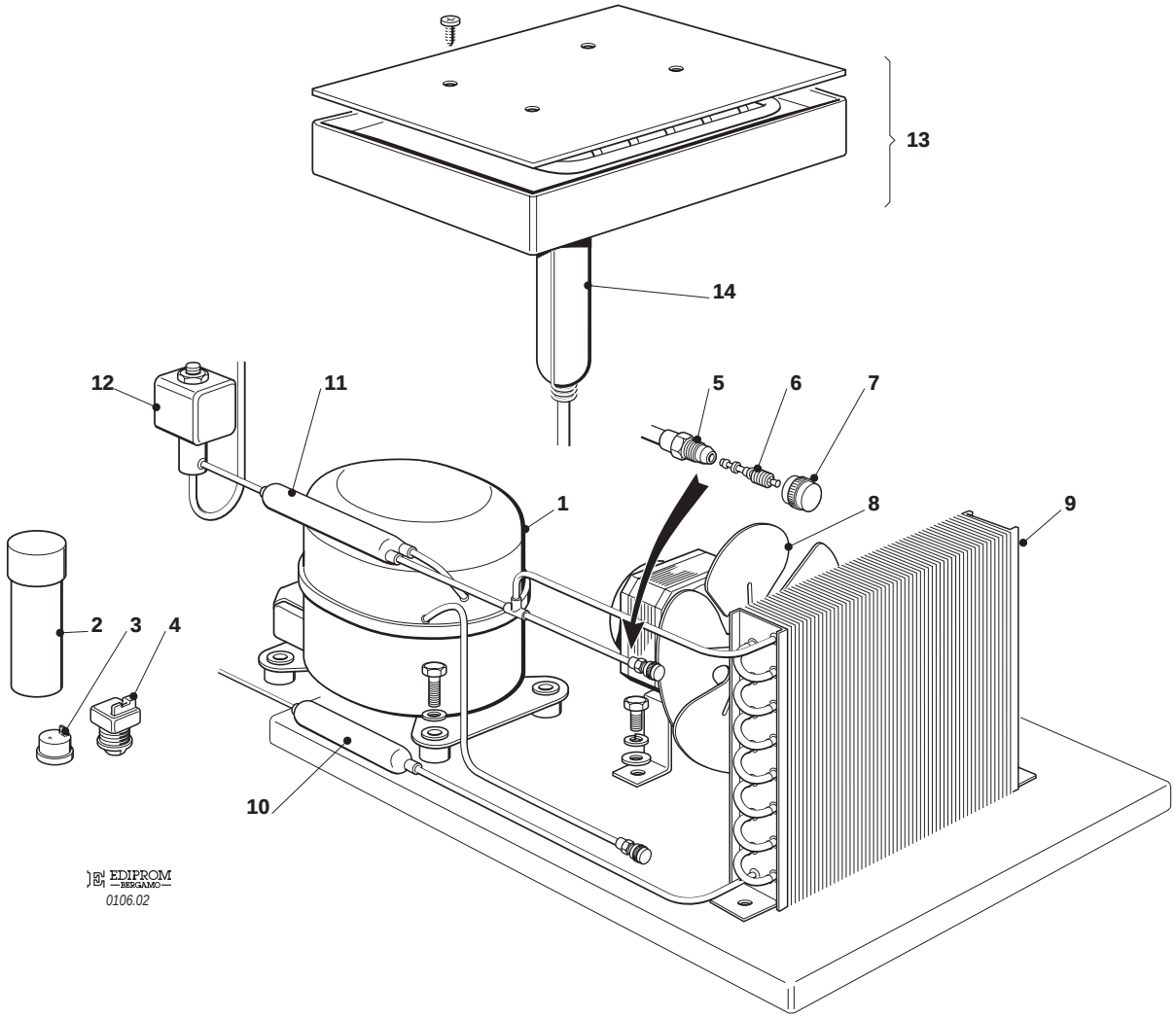
13
14
12
11
5
6
7
1
8
9
2
3
4
10
EDIPROM
BERGAMO
0106.02

SD 23 - SD 30 - REFRIGERANT SYSTEM AIR COOLED - SISTEMA REFRIGERANTE RAFFR. AD ARIA
CIRCUIT FRIGORIFIQUE REFROID. PAR AIR - LUFTGEKÜHLT GEFRIERSYSTEM

ITEM NO POS NO REP. NO REF. NO	PART NO CODICE REFERENCE STUECK NR	DESCRIPTION	DESCRIZIONE	DESIGNATION	BESCHREIBUNG
1	670097 08	COMPRESSOR	COMPRESSORE	COMPRESSEUR	KOMPRESSOR
2	620167 35	START CAPACITOR	CAPACITA' D'AVV.	CAPACITE DE DEMARR.	START KONDENSATOR
3	620058 65	PROTECTOR	PROTETTORE	PROTECTEUR	SCHUTZGERAT
4	620057 35	RELAY	RELE	RELAIS	RELAIS
5	650109 00	VALVE BODY	CORPO VALVOLA	CORPS DE VANNE	VENTILGEHAUSE
6	670012 00	VALVE PISTON	PISTONCINO VALVOLA	PISTON	VENTILKOLBEN
7	650106 00	VALVE CAP	CAPPUCCIO VALVOLA	CAPUCHON DE VANNE	VENTILKLAPPE
8	620419 02 620419 32	FAN MOTOR FAN BLADE	MOTOVENTILATORE VENTOLA	MOTO-VENTILATEUR HELICE	LÜFTERMOTOR FLUGEL
9	620285 00 620276 02	AIR COOLED CONDENSER - SD 23 AIR COOLED CONDENSER - SD30	CONDENSATORE AD ARIA- SD 23 CONDENSATORE AD ARIA- SD 30	CONDENSEUR - SD 23 CONDENSEUR - SD 30	KONDENSATOR - SD 23 KONDENSATOR - SD 30
10	630003 05	DRIER	FILTRO DEUMIDIFICATORE	FILTRE DESHYDRATEUR	TROCKNER
11	630137 00	MECHANICAL FILTER	FILTRO MECCANICO	FILTRE MECANIQUE	MECHANISCHFILTERN
12	620306 48 620306 14 620306 22	HOT GAS VALVE COIL HOT GAS VALVE BODY - SD 23 HOT GAS VALVE BODY - SD 30	BOBINA VALVOLA GAS CALDO CORPO VALVOLA GAS CALDO - SD 23 CORPO VALVOLA GAS CALDO - SD 30	BOBINE VANNE GAZ CHAUD CORP VANNE GAZ CHAUD - SD 23 CORP VANNE GAZ CHAUD - SD 30	HEISSGAZ VENTIL SPULE VENTILGEHAUSE - SD 23 VENTILGEHAUSE - SD 30
13	784478 00 784479 00	EVAPORATOR ASSY - SD 23 EVAPORATOR ASSY - SD 30	ASSIEME EVAPORATORE - SD 23 ASSIEME EVAPORATORE - SD 30	ENS. EVAPORATEUR - SD 23 ENS. EVAPORATEUR - SD 30	VERDAMPFER - SD 23 VERDAMPFER - SD 30
14	784444 09 784444 01	ACCUMULATOR ASSY - SD 23 ACCUMULATOR ASSY - SD 30	ASSIEME ACCUMULATORE - SD 23 ASSIEME ACCUMULATORE - SD 30	ENS. ACCUMULATEUR - SD 23 ENS. ACCUMULATEUR - SD 30	SAMMLER UND SAUGLEITUNGEN - SD 23 SAMMLER UND SAUGLEITUNGEN - SD 30

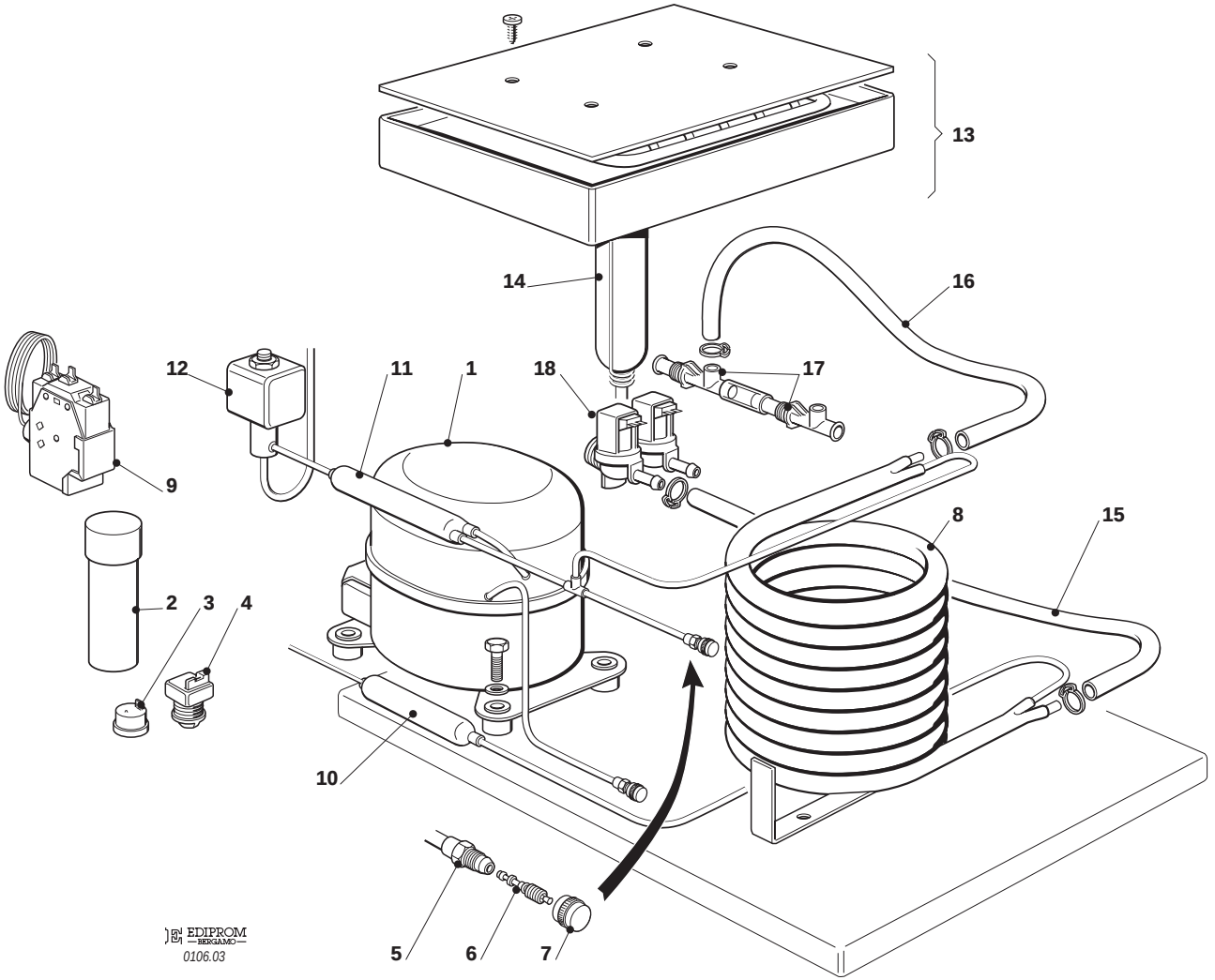
13
14
16
12
11
1
18
17
9
8
15
2
3
4
10
5
6
7
EDIPROM
BERGAMO
0106.03

SD 23 - SD 30 - REFRIGERANT SYSTEM WATER COOLED - SISTEMA REFRIGERANTE RAFFR. AD ACQUA
CIRCUIT FRIGORIFIQUE REFROID. PAR EAU - WASSERGEKÜHLT GEFRIERSYSTEM

1	670097 03	COMPRESSOR	COMPRESSORE	COMPRESSEUR	KOMPRESSOR
2	620167 35	START CAPACITOR	CAPACITA' D'AVV.	CAPACITE DE DEMARR.	START KONDENSATOR
3	620058 65	PROTECTOR	PROTETTORE	PROTECTEUR	SCHUTZGERAT
4	620057 35	RELAY	RELE	RELAIS	RELAIS
5	650109 00	VALVE BODY	CORPO VALVOLA	CORPS DE VANNE	VENTILGEHAUSE
6	670012 00	VALVE PISTON	PISTONCINO VALVOLA	PISTON	VENTILKOLBEN
7	650106 00	VALVE CAP	CAPPUCCIO VALVOLA	CAPUCHON DE VANNE	VENTILKLAPPE
8	620389 02	WATER C. CONDENSER ASSY	ASS. CONDENSATORE ACQUA	ENS. CONDENSEUR A EAU	WASSER KONDENSATOR GES.
9	620075 00*	PRESSURE CONTROL	PRESSOSTATO	PRESSOSTAT	PRESSOSTAT
10	630003 05	DRIER	FILTRO DEUMIDIFICATORE	FILTRE DESHYDRATEUR	TROCKNER
11	630137 00	MECHANICAL FILTER	FILTRO MECCANICO	FILTRE MECANIQUE	MECHANISCHFILTERN
12	620306 48 620306 14 620306 22	HOT GAS VALVE COIL HOT GAS VALVE BODY - SD 23 HOT GAS VALVE BODY - SD 30	BOBINA VALVOLA GAS CALDO CORPO VALVOLA GAS CALDO - SD 23 CORPO VALVOLA GAS CALDO - SD 30	BOBINE VANNE GAZ CHAUD CORP VANNE GAZ CHAUD - SD 23 CORP VANNE GAZ CHAUD - SD 30	HEISSGAZ VENTIL SPULE VENTILGEHAUSE - SD 23 VENTILGEHAUSE - SD 30
13	784478 00 784479 00	EVAPORATOR ASSY - SD 23 EVAPORATOR ASSY - SD 30	ASSIEME EVAPORATORE - SD 23 ASSIEME EVAPORATORE - SD 30	ENS. EVAPORATEUR - SD 23 ENS. EVAPORATEUR - SD 30	VERDAMPFER - SD 23 VERDAMPFER - SD 30
14	784444 09 784444 01	ACCUMULATOR ASSY - SD 23 ACCUMULATOR ASSY - SD 30	ASSIEME ACCUMULATORE - SD 23 ASSIEME ACCUMULATORE - SD 30	ENS. ACCUMULATEUR - SD 23 ENS. ACCUMULATEUR - SD 30	SAMMLER UND SAUGLEITUNGEN - SD 23 SAMMLER UND SAUGLEITUNGEN - SD 30
15	281900 01	PLASTIC TUBE - PER METER	TUBO PVC - PER METRO	TUYAU EN PLASTIQUE - POUR MT.	PLASTIK ROHR - PRO METER
16	281900 01	PLASTIC TUBE - PER METER	TUBO PVC - PER METRO	TUYAU EN PLASTIQUE - POUR MT.	PLASTIK ROHR - PRO METER
17	060545 00	WATER DRAIN FITTING	RACCORDO SCARICO ACQUA	RACCORD EVACUATION EAU	WASSERABFLUSSANSCHLUSSE
18	650105 70 650105 20 650105 21	WATER INLET VALVE FLOW CONTROL ICE FLOW CONTROL COND.	ELETTROVALVOLA DOPPIA CONTROLLO DI FLUSSO GHIACCIO CONTROLLO DI FLUSSO COND.	VANNE ARRIVÉE EAU CONTROLE DE DEBIT GLACE CONTROLE DE DEBIT COND.	ELEKTROVENTIL DURCHFLUSSREGLER EIS DURCHFLUSSREGLER KOND
	*620499 01	FROM SD 23 S.N. MB 776420 SD 30 S.N. MC 273747	DA SD 23 MATRICOLA MB 776420 SD 30 MATRICOLA MC 273747	A PARTIR DU SD 23 N.S. MB 776420 SD 30 N.S. MC 273747	VON SD 23 S.N. MB 776420 SD 30 S.N. MC 273747

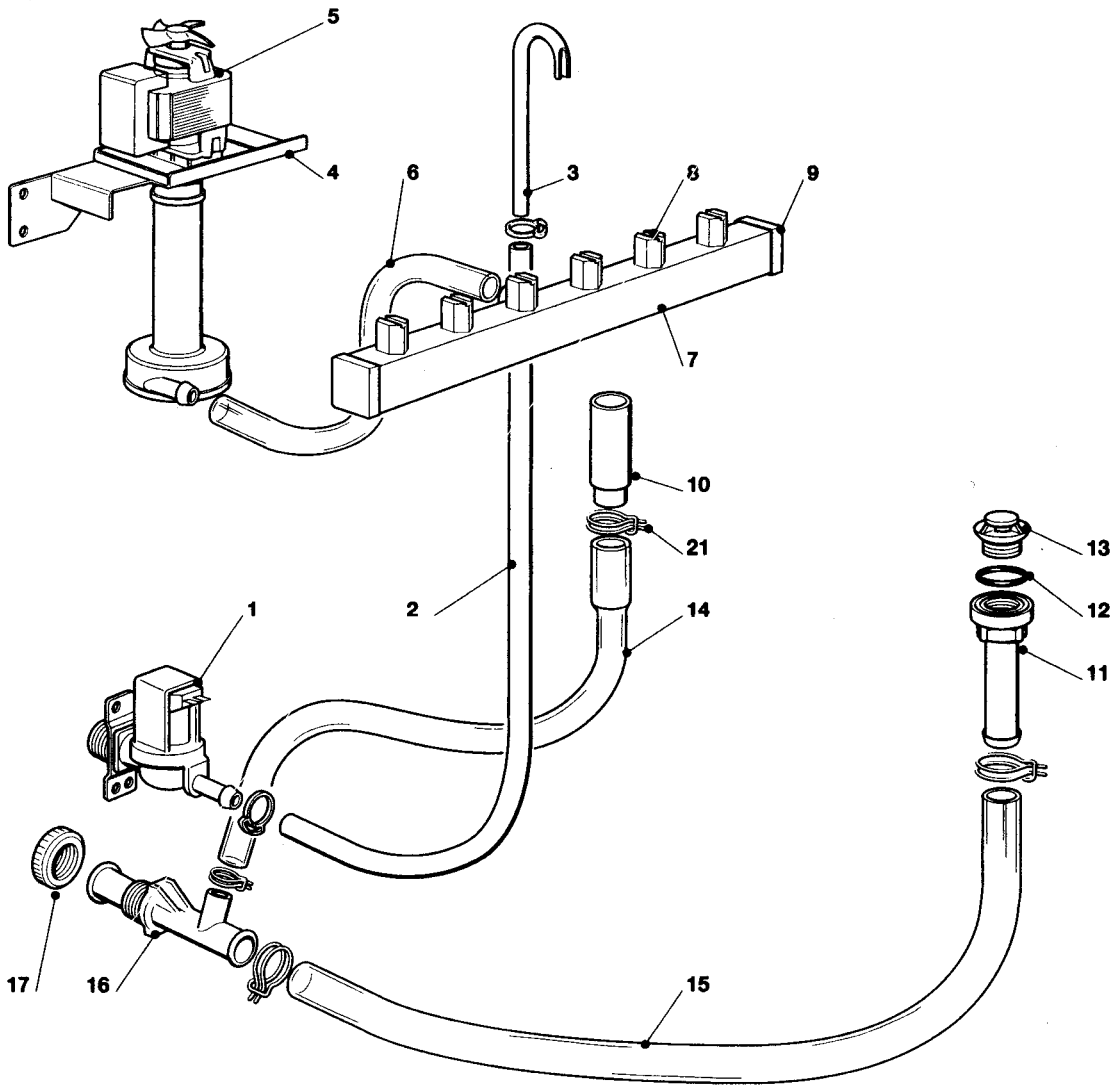
5
4
6
3
8
9
7
10
21
2
1
14
13
12
11
17
16
15

SD 23 - SD 30 - WATER SYSTEM - CIRCUITO IDRAULICO - CIRCUIT HYDRAULIQUE - WASSERSYSTEM

ITEM NO POS NO REP. NO REF. NO	PART NO CODICE REFERENCE STUECK NR	DESCRIPTION	DESCRIZIONE	DESIGNATION	BESCHREIBUNG
1	650105 66 650105 70	WATER INLET VALVE - AIR COOLED WATER INLET VALVE - WATER COOLED	ELETTROVALVOLA INGR. ACQUA ELETTROVALVOLA DOPPIA	ELECTROVANNE ARR. EAU - REFR. AIR ELECTROVANNE ARR. EAU - REFR. EAU	WASSEREINLAUFVENTIL - LUFT WASSEREINLAUFVENTIL - WASSER
2	281900 01	PLASTIC TUBE - PER METER	TUBO INGRESSO ACQUA	TUYAU EN PLASTIQUE - POUR MT.	PLASTIK ROHR - PRO METER
3	793172 00R	WATER INLET PIPE	TUBO INGR. ACQUA	TUYAU ENTREE EAU	WASSEREINLAUFROHR
4	724332 00	METAL BRACKET	SUPPORTO POMPA INOX	SUPPORT METALLIQUE	METALTRAEGER
5	620433 00	WATER PUMP	POMPA	POMPE A EAU	WASSER PUMPE
6	610150 03	PUMP INLET WATER PIPE	TUBO MANDATA POMPA	TUYAU DE REFOULEMENT POMPE	PUMPENABFLUSSCHLAUCH
7	650665 16 650665 17	SPRAY BAR - SD 23 SPRAY BAR - SD 30	TUBO SPRUZZATORE - SD 23 TUBO SPRUZZATORE - SD 30	COLLECTEUR - SD 23 COLLECTEUR - SD 30	KOLLEKTOR - SD 23 KOLLEKTOR - SD 30
8	660558 00 (6 x SD 23 - 8 x SD 30)	SPRAY JET	SPRUZZATORI	GICLEURS	SPRÜHDÜSEN
9	660557 00	PLUG MAN IFOLD	TAPPO PER SPRUZZATORE	BOUCHON POUR COLLECTEUR	STOPFEN
10	660698 00 660698 02	OVERFLOW STAND PIPE - SD 23 OVERFLOW STAND PIPE - SD 30	TUBO DI TROPPO PIENO - SD 23 TUBO DI TROPPO PIENO - SD 30	TROP PLEIN - SD 23 TROP PLEIN - SD 30	UEBERLAUFROHR - SD 23 UEBERLAUFROHR - SD 30
11	660219 01	DRAIN FITTING	SCARICO CELLA	TUYAU EVACUATION	ABFLUSSROHR
12	640134 00	O-RING	O-RING	JOINT TORIQUE	SIMMER RING
13	660211 01	DRAIN FILTER	FILTRO SCARICO CELLA	FILTRE CABINE STOCKAGE	BEHÄLTER ABLAUF FILTER
14	610191 00	OVERFLOW DRAIN PIPE	TUBO SCARICO TROPPO PIENO	TUYAU VIDANGE TROP PLAIN	UBERLAUFABFLUSSROHR
15	610148 09	BIN DRAIN PIPE	TUBO SCARICO CONTENITORE	TUYAU VIDANGE CONTENEUR	BEHÄLTERAUSLAUFSCHLAUCH
16	660224 00	WATER DRAIN FITTING	RACCORDO A "T"	RACCORD EVACUATION EAU	WASSERABFLUSSANSCHLUSSE
17	660535 00	PLASTIC RING NUT	GHIERA	COLLIER DE SERRAGE EN PLAST.	PLASTIKRING MUTTER
21	650499 00	METAL CLAMP	FASCETTA STRINGITUBO	COLLIER METALLIQUE	METALLFESTKLEMMEN

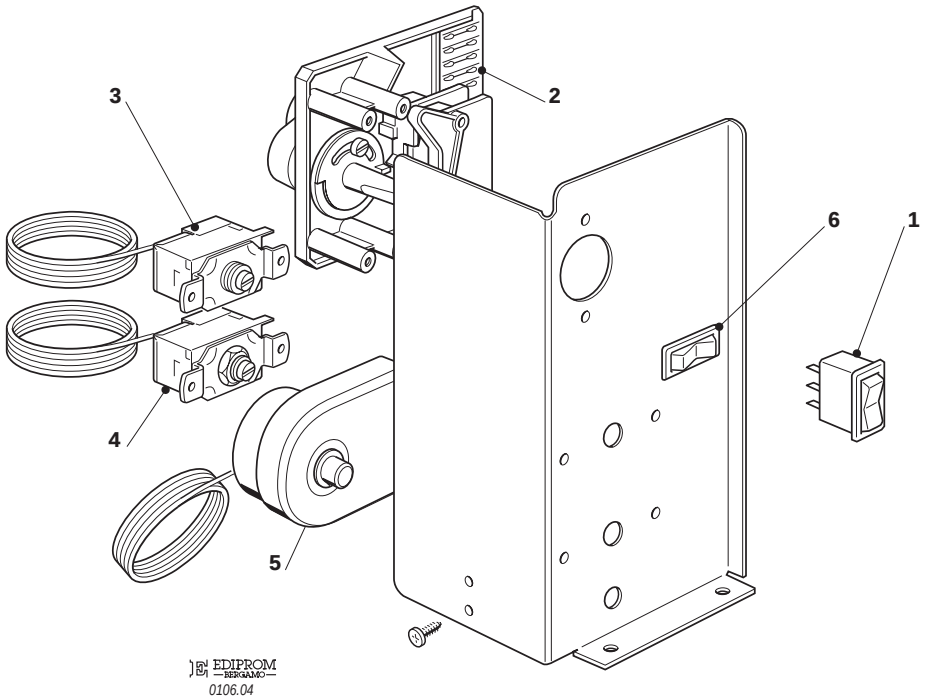
3
2
6
1
4
5
EDIPROM
BERGAMO
0106.04

SD 23 - SD 30 - CONTROL BOX - SCATOLA DI CONTROLLO - BOITE ELECTRIQUE - SCHALTSCHRANK

ITEM NO POS NO REP. NO REF. NO	PART NO CODICE REFERENCE STUECK NR	DESCRIPTION	DESCRIZIONE	DESIGNATION	BESCHREIBUNG
1	620453 00	SWITCH	INTERRUTTORE LUMINOSO	INTERRUPTEUR LUMINEUX	SCHALTER
2	620441 00 620441 02	TIMER SD 23 TIMER SD 30	TIMER SD 23 TIMER SD 30	MINUTERIE SD 23 MINUTERIE SD 30	TIMER SD 23 TIMER SD 30
3	620201 00	EVAPORATOR THERMOSTAT	TERMOSTATO EVAPORATORE	THERMOSTAT EVAPORATEUR	VERDAMPFERTHERMOSTAT
4	630005 00	BIN THERMOSTAT	TERMOSTATO CONTENITORE	THERMOSTAT CONTENEUR	BEHÄLTER THERMOSTAT
5	620443 02	THERMOSTAT - SAFETY	TERMOSTATO DI SICUREZZA	THERMOSTAT DE SECURITÉ	SICHERHEITS THERMOSTAT
6	620442 02	SWITCH	COMMUTATORE UNIPOLARE	INTERRUPTEUR	UMSCHALTER

SD 23 - SD 30 - COMPRESSOR CHART - TABELLA COMPRESSORI - TABLEAU COMPRESSEURS - KOMPRESSOR KARTE

MODEL MODELLO MODELE MODELL	VOLTS VOLTAGGIO TENSION SPANNUNG	COMPRESSOR MODEL MODELLO COMPRESSORE TYPE DU COMPRESSEUR KOMPRESSOR TYP	COMPRESSOR ASSY ASS. COMPRESSORE ENS. COMPRESSEUR NUR KOMPRESSOR	RELAY RELE' RELAIS RELAIS	PROTECTOR PROTETTORE PROTECTEUR SCHUTZGERAT	START CAPACITOR CAPACITA' D'AVV. CAPACITE DE DEMARR. START KONDENSATOR
SD 23 - J	115/60/1	AEZ 4425 Y	670066 10	620057 49	620058 02	620167 41
SD 23 - 30 - J	230/60/1	AEZ 4425 Y GL 80 TG	670066 08 670097 10	620057 40 620057 64	620058 74 620058 95	620167 01 620167 29
SD 23 - 30 - J	230/50/1	AEZ 4425 Y GL 80 TB	670066 09 670097 08	620057 32 620057 35	620058 64 620058 65	620167 29 620167 29

SD 23 - SD 30 - ELECTRIC COMPONENTS CHART - TABELLA COMPONENTI ELETTRICI
TABLEAU COMPOSANTS ELECTRIQUE - ELEKTRISCHEKARTE

MODEL MODELLO MODELE MODELL	VOLTS TENSIONE TENSION SPANNUNG	WATER PUMP POMPA POMPE A EAU WASSER PUMPE	FAN MOTOR ONLY MOTORE VENTILATORE MOTEUR VENTILATEUR LUFTER MOTOR	WATER INLET VALVE VALVOLA INGR. ACQUA V.E.M. ARRIVEE' EAU WASSEREIN. VENTIL	HOT GAS VALVE VALVOLA GAS CALDO V.E.M. GAZ CHAUDS HEISSGAZ VENTIL	TIMER TIMER MINUTERIE TIMER
SD 23 - J	115/60/1	620433 04	620419 03	650105 67 / 650105 71 (AIR / WATER)	620306 49	620441 04
SD 23 - 30 - J	230/60/1	620433 01	620419 02	650105 66 / 650105 70 (AIR / WATER)	620306 48	620441 00 / 620441 02 SD 23 / SD 30
SD 23 - 30 - J	230/50/1	620433 00	620419 02	650105 66 / 650105 70 (AIR / WATER)	620306 48	620441 00 / 620441 02 SD 23 / SD 30

SIMAG
ICE MACHINES

www.simag.it

SIMAG
via Risorgimento, 4
20017 Mazzo di Rho (MI) - Italy
Tel. +39 02 93900215 (Commerciale - Sales Dept.)
Tel. +39 02 93960357 (Assistenza - Service Dept.)
Fax +39 02 93900226 (Commerciale - Sales Dept.)
Fax +39 02 93960366 (Assistenza - Service Dept.)
e-mail: sales@simag.it
e-mail: service@simag.it

Singapore Office
SIMAG FAR EAST
627A Aljunied Road
04-04 Biztech Centre
Singapore 389842
Tel. ++65 6738 5393
Fax ++65 6738 1959
e-mail: scotsice@singnet.com.sg

Certified ISO 9001
TOTAL QUALITY