DESPIECE TECNICO

Hornos estáticos
Fours statiques
Static ovens
Kombinationsöfen
Forni statici
Fornos estáticos

Modelos:

HG9-10
HG9-20
HG9-15
HE9-10
HE9-20

Octubre 2010 October

Fagor Industrial

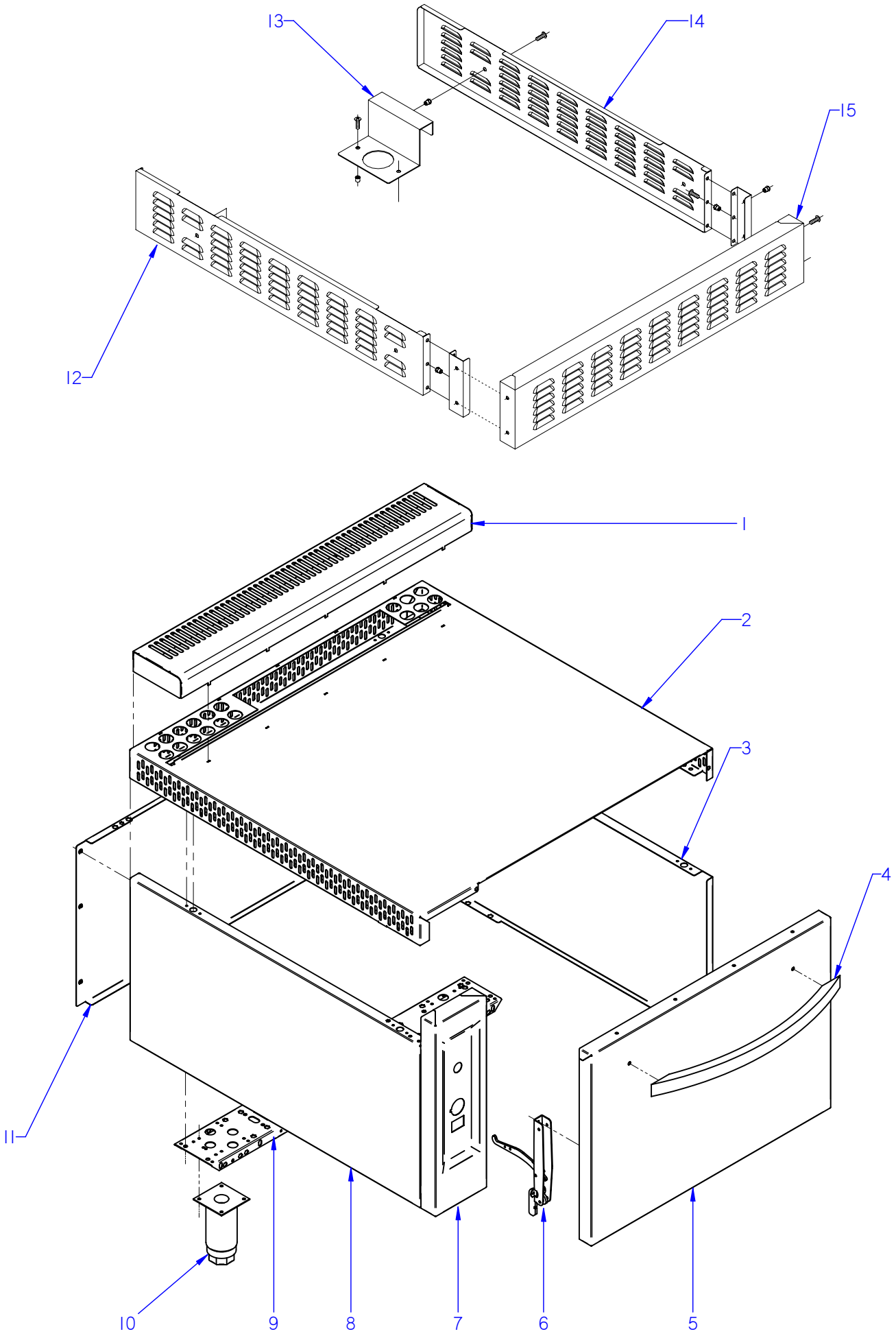

ITEM MARCADO EN COLOR = REPUESTO RECOMENDADO
COLOURED ITEM = RECOMMENDED SPARE PART

N plano	Firma	Fecha	Aparato	MUEBLE / UNIT	Lamina	
C-2711		2010-10	HORNOS ESTATICOS		1	Fagor Industrial S.Coop. FAGOR Oñate

MOD.	HORNOS ESTATICOS / STATIC OVENS	ZONA / ZONE	MUEBLE / UNIT	PLANO DIAGRAM	C-2711

ITEM	CODIGO CODE	DENOMINACION	NAME	HG9-10	HG9-20	HG9-15	HE9-10	HE9-20			
1	T982806000	EMBELLECEDOR CHIMENEA	FIRE COVER	1	1	_	1	1			
1	U102802000	EMBELLECE. CHIMENEA HG9-15	FIRE COVER HG9-15	_	_	1	_	_			
	Q419005000	REMACHE 4x8 ALMG3 / ALUMINIO	RIVET 4X8 ALMG3 / ALUMINIUM	6	6	_	6	6			
2	T982815000	CUBIERTA HORNO	DECK OVEN	1	_	_	1	_			
2	T982817000	CUBIERTA HORNO HG9-20 INF(08	DECK OVEN HG9-20	_	1	_	_	1			
2	U102801000	TAPA HORNO HG9-15	DECK OVEN HG9-15	_	_	1	_	_			
	Q221342000	REMACHE EXAGONAL M5	HEXAGONAL RIVET M5	4	8	8	4	8			
	X012612000	PITON CIERRE	LOCK SPIKE	4	8	_	4	8			
	X010503000	CIERRE MUELLE	LOCK SPRING	2	4	_	2	4			
	Q419007000	REMACHE TUBULAR C/V Ø2x6	TUBULAR RIVET C/V Ø2x6	4	8	_	4	8			
	Q152004000	TORNIL, APLASTADO M5x13 A304	FLAT HEADED BOLT M5x13 A304	2	4	4	2	4			
3	T982816000	PANEL LATERAL DERECHO	RIGHT SIDE PANEL	1	2	_	1	2			
3	U102805000	PANEL LATERAL DCHO. HG9-15	RIGHT SIDE PANEL HG9-15	_	_	1	_	_			
	X010503000	CIERRE MUELLE	LOCK SPRING	2	4	2	2	4			
	Q419007000	REMACHE TUBULAR C/V Ø2x6	TUBULAR RIVET C/V Ø2x6	4	8	4	4	8			
	Q221343000	REMACHE EXAGONAL M6	HEXAGONAL RIVET M6	4	8	4	4	8			
	Q152004000	TORNIL, APLASTADO M5x13 A304	FLAT HEADED BOLT M5x13 A304	1	2	1	1	2			
4	U020504000	ASA DE HORNO COMPLETA G900	COMPL. OVEN HANDLE G900	1	2	1	1	2			
	Q012041000	TORNILLO EXAGONAL M6x10	HEXAGONAL BOLT M6x10	2	4	2	2	4			
	Q302022000	ARANDELA 16x6x1,2 A304	WASHER 16x6x1.2 A304	2	4	2	2	4			
5	1100003414	KIT PUERTA DE HORNO	OVEN DOOR KIT	1	2	_	1	2			
5	U100514000	PUERTA DE HORNO GRANDE	LARGE OVEN DOOR	_	_	1	_	_			
6	U020528000	BISAGRA CIERRE HORNO	OVEN LOCK HINGE	2	4	2	2	4			
	Q152022000	TORNILLO M6x8	BOLT M6x8	6	12	6	6	12			
7	U022862000	PORTAMANDOS LATERAL HG	SIDE CONTROL HOLDER HG	1	2	1	_	_			
7	U672856000	PORTAMANDOS LATERAL HE	SIDE CONTROL HOLDER HE	_	_	_	1	2			
	U022836000	ESCUDO FAGOR	FAGOR EMBLEM	1	2	1	1	2			
	Q221023000	CLIP SUJECIÓN RÁPIDA Ø5	RAPID CONNECT CLIP Ø5	2	4	2	2	4			
	Q152004000	TORNIL, APLASTADO M5x13 A304	FLAT HEADED BOLT M5x13	2	4	2	2	4			

MOD.	HORNOS ESTATICOS / STATIC OVENS	ZONA / ZONE	MUEBLE / UNIT	PLANO DIAGRAM	C-2711

ITEM	CODIGO CODE	DENOMINACION	NAME	HG9-10	HG9-20	HG9-15	HE9-10	HE9-20			
8	T982814000	PANEL LATERAL IZQUIERDO	LEFT SIDE PANEL	1	2	_	1	2			
8	U102803000	PANEL LATERAL IZDO. HG9-15	LEFT SIDE PANEL HG9-15	_	_	1	_	_			
	X010503000	CIERRE MUELLE	LOCK SPRING	2	4	2	2	4			
	Q419007000	REMACHE TUBULAR C/V Ø2x6	TUBULAR RIVET C/V Ø2x6	4	8	4	4	8			
	Q221343000	REMACHE EXAGONAL M6	HEXAGONAL RIVET M6	4	8	4	4	8			
	Q152004000	TORNIL, APLASTADO M5x13 A304	FLAT HEADED BOLT M5x13 A304	1	2	1	1	2			
9	U022625000	LISTON SOPORTE PATAS 1 M	LEG SUPPORT STRIP 1 M	2	4	_	2	4			
9	U102611000	LISTON SOPORTE PATAS 1,5 M	LEG SUPPORT STRIP 1,5 M	_	_	2	_	_			
10	X260151000	PATA REGULABLE	ADJUSTABLE LEG	4	8	4	4	8			
	Q411304000	REMACHE AVIBULB Ø 4,8	AVIBULB RIVET Ø 4.8	16	32	16	4	32			
11	T982802000	PANEL POSTERIOR 1 M	REAR PANEL 1 M	1	2	_	1	2			
11	U102804000	PANEL POSTERIOR HG9-15	REAR PANEL HG9-15	_	_	1	_	_			
	Q419005000	REMACHE 4x8 ALMG3 / ALUMINIO	RIVET 4X8 ALMG3 / ALUMINIUM	6	12	6	6	12			
	Q221342000	REMACHE EXAGONAL M5	HEXAGONAL RIVET M5	2	4	2	2	4			
	X012612000	PITON CIERRE	LOCK SPIKE	2	4	2	2	4			
12	T992801000	ZOCALO LATERAL IZQUIERDO	LEFT SIDE SOCKET	_	1	_	_	1			
	Q419005000	REMACHE 4x8 ALMG3 / ALUMINIO	RIVET 4X8 ALMG3 / ALUMINIUM	_	3	_	_	3			
13	T992600000	ESCUADRA FIJACION PATA	SQUARE FOOT LOCK	_	4	_	_	4			
	Q012032000	TORNILLO EXAGONAL M5X15	HEXAGONAL BOLT M5X15	_	8	_	_	8			
14	T992800000	ZOCALO LATERAL DERECHO	RIGHT SIDE SOCKET	_	1	_	_	1			
	Q419005000	REMACHE 4x8 ALMG3 / ALUMINIO	RIVET 4X8 ALMG3 / ALUMINIUM	_	3	_	_	3			
S/Nº	T992802000	ESCUADRA AMARRE ZOCALO	TIE SQUARE SOCKET		2		_	2			
	Q221342000	REMACHE EXAGONAL M5	HEXAGONAL RIVET M5	_	10	_	_	10			
	Q152004000	TORNIL, APLASTADO M5x13 A304	FLAT HEADED BOLT M5x13 A304	_	10	_	_	10			
15	T992803000	ZOCALO FRONTAL	SOCKET FRONT	_	1	_	_	1			
	Q152004000	TORNIL, APLASTADO M5x13 A304	FLAT HEADED BOLT M5x13 A304	_	4	_	_	4			

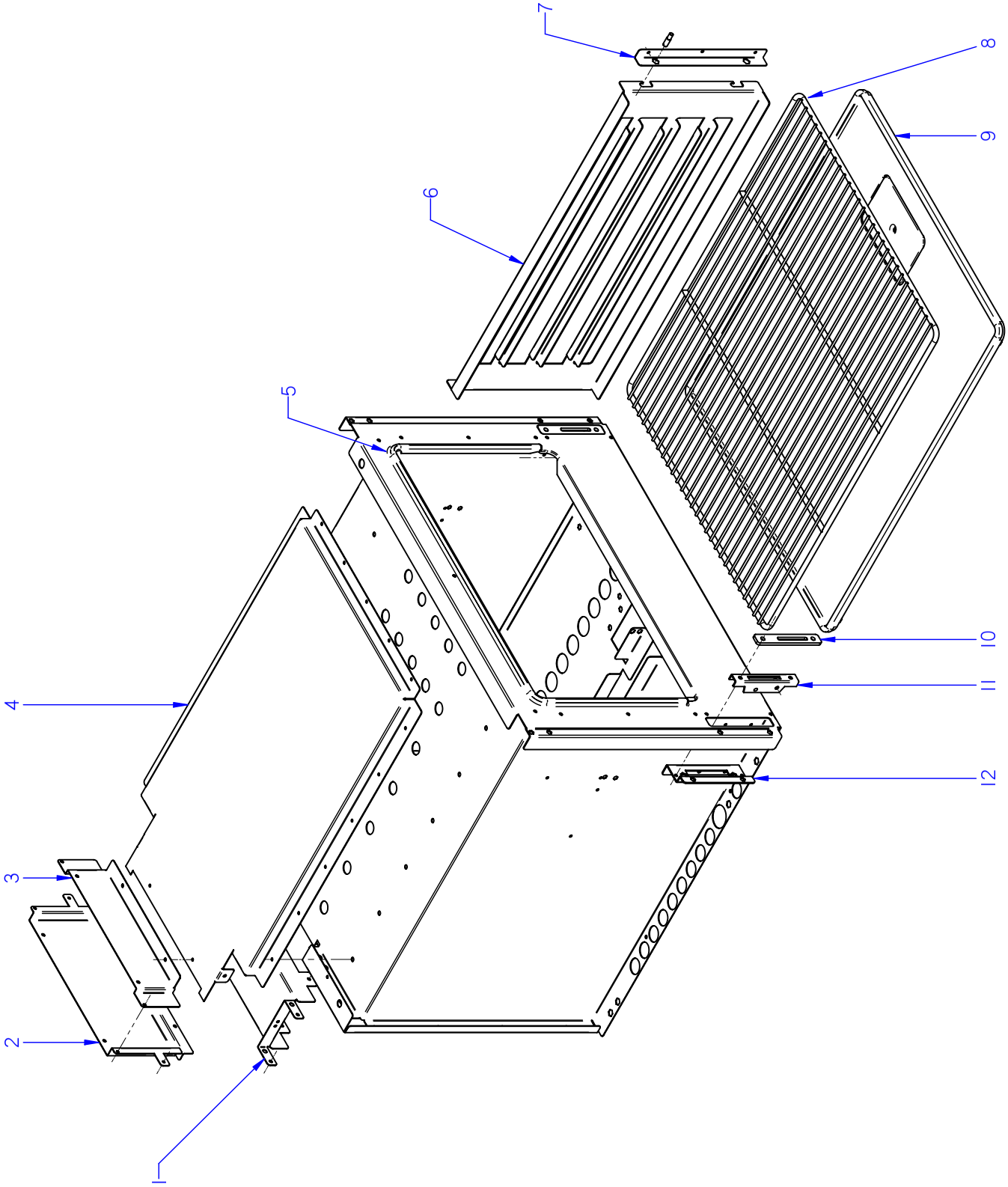

ITEM MARCADO EN COLOR = REPUESTO RECOMENDADO
COLOURED ITEM = RECOMMENDED SPARE PART

N plano	Firma	Fecha	Aparato		Lamina	
C-2712		2010-10	HORNOS ESTATICOS HG9-10/15/20	HORNO A GAS / GAS OVEN	2	Fagor Industrial S.Coop. Oñate FAGOR

MOD.	HORNOS ESTATICOS / STATIC OVENS	ZONA / ZONE	HORNO A GAS / GAS OVEN	PLANO DIAGRAM	C-2712

ITEM	CODIGO CODE	DENOMINACION	NAME	HG9-10	HG9-20	HG9-15					NOTAS
1	T985610000	DISTANCIADOR CHIMENEA	FLUEPIPE SPACER	1	2	_					
2	T985613000	POSTERIOR CHIMENEA	REAR FLUEPIPE	1	2	_					
2	U105628000	CHIMENEA POSTERIOR	REAR FLUEPIPE	_	_	1					
	Q419005000	REMACHE 4x8 ALMG3 / ALUMINIO	RIVET 4X8 ALMG3 / ALUMINIUM	8	16	_					
3	T985612000	CHIMENEA ANTERIOR	FRONT FLUEPIPE	1	2	_					
3	U105629000	CHIMENEA ANTERIOR	FRONT FLUEPIPE	_	_	1					
4	T985611000	CAMARA DE HUMOS	SMOKE CHAMBER	1	2	_					
4	U105615000	CAMARA DE HUMOS	SMOKE CHAMBER	_	_	1					
	Q419005000	REMACHE 4x8 ALMG3 / ALUMINIO	RIVET 4X8 ALMG3 / ALUMINIUM	19	38	19					
5	U025623000	JUNTA PUERTA HORNO INOX	OVEN DOOR SEAL INOX.	1	2	_					
5	U105605000	JUNTA PUERTA HORNO INOX	OVEN DOOR SEAL INOX.	_	_	1					
6	U915607000	GUIA LATERAL HORNO G700	OVEN SIDE GUIDE G700	2	4	_					
6	U105611000	GUIA LATERAL HORNO	OVEN SIDE GUIDE	_	_	2					
	Q151336000	TORNILLO SOPORTE GUIAS	GUIDE SUPPORT BOLT	4	8	4					
	Q302022000	ARANDELA 16X6X1.2 A.304	WASHER 16X6X1.2 A.304	4	8	4					
	Q221321000	REMACHE ROSCAD.NUTSERT.M6	THREADED RIVET .NUTSERT.M6	4	8	4					
7	U915616000	SUPLEMENTO AMARRE GUIA LAT.	SIDE GUIDE FAST. SUPPL.	2	4	_					
	Q412000000	REMACHE TUBULAR 4x8	TUBULAR RIVET 4x8	6	12	_					
8	U135642000	PARRILLA DE HORNO	OVEN TRAY	1	2	_					
8	U105624000	PARRILLA DE HORNO	OVEN TRAY	_	_	1					
9	U025636000	PLACA DE HORNO	OVEN PLATE	1	2	_					
10	U915619000	EMBELLECED GUIA BISAGRA	HINGE GUIDE TRIM	2	4	_					
10	U105620000	EMBELLECED GUIA BISAGRA	HINGE GUIDE TRIM	_	_	2					
	Q152045000	TORNILLO AMARRE M6X25	FASTENING BOLT M6X25	4	8	4					
11	U010512000	GUIA DE BISAGRA	HINGE GUIDE	2	4	2					
12	U915604000	AMARRE GUIA BISAGRA HORNO	OVEN HINGE GUIDE FASTENING	2	4	_					
	Q221342000	REMACHE EXAGONAL M5	HEXAGONAL RIVET M5	2	4	_					
	Q412000000	REMACHE TUBULAR 4x8	TUBULAR RIVET 4x8	6	12	_					
	Q222042000	REMACHE EXAGONAL ROSCA M6	HEXAGONAL RIVET THREAD M6	4	8	_					

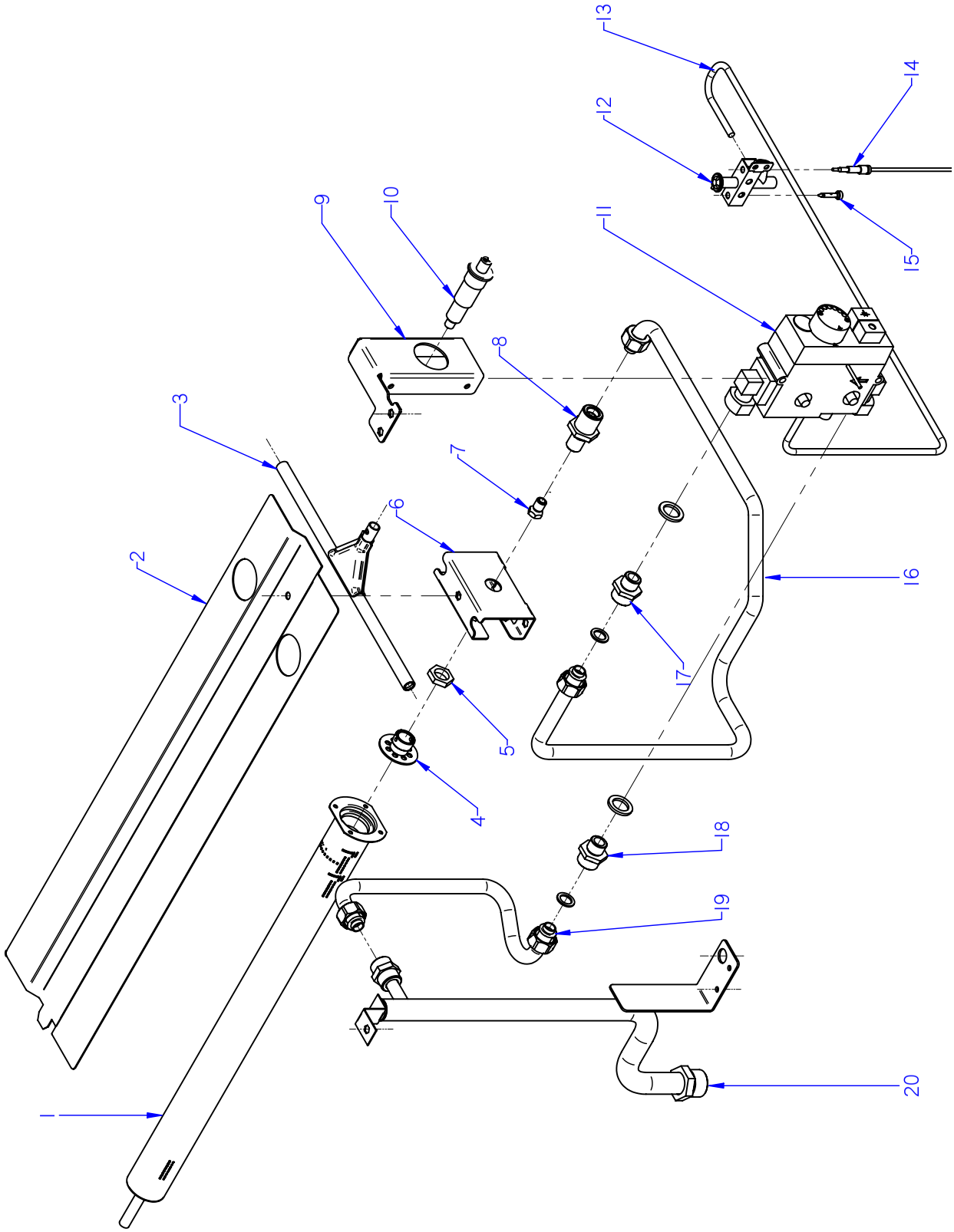

ITEM MARCADO EN COLOR = REPUESTO RECOMENDADO
COLOURED ITEM = RECOMMENDED SPARE PART

N plano	Firma	Fecha	Aparato	Lamina	
C-2713		2010-10	PARTE FUNCIONAL GAS / FUNCTIONAL PART GAS HORNOS ESTATICOS HG9-10/15/20	3	Fagor Industrial S.Coop. FAGOR Oñate

MOD.	HORNOS ESTATICOS / STATIC OVENS	ZONA / ZONE	PARTE FUNCIONAL GAS FUNCTIONAL PART GAS	PLANO DIAGRAM	C-2713

ITEM	CODIGO	DENOMINACION	TEXTO	HG9-10	HG9-20	HG9-15					NOTAS
1	U105701000	QUEMADOR HORNO	OVEN BURNER.	1	2	2					
	Q042022000	TORNILLO AVELLLANADO M4X15	COUNTERSUNK BOLT M4x15	4	8	8					
2	U915613000	DEFLECTOR QUEMADOR HORNO	OVEN BURNER DEFLECTOR	1	2	_					
2	U105610000	DEFLECTOR QUEMADOR HORNO	OVEN BURNER DEFLECTOR	_	_	2					
	Q302022000	ARANDELA 16x6x1,2 A304	WASHER 16x6x1.2 A304	1	2	2					
	Q152004000	TORNILLO APLASTADO M5x13	FLAT HEAD SCREW M5X13	1	2	2					
3	U105712000	RAMA ENCENDIDO QUEM. HORNO	OVEN BURNER IGNITION BRANC	_	_	1					
	U105013000	TUERCA M10X1	NUT M10X1	_	_	1					
	X205028000	BICONO Ø 6	BICONE Ø 6	_	_	1					
4	X505013000	REGULADOR DE AIRE POLIDORO	POLIDORO AIR CONTROL	1	2	2					
	Q151320000	TORNILLO ALOMADO M4x6 H.ZINC.	CURVED SCREW M4X6 H. ZINC	1	2	2					
S/Nº	U102401000	TOBERA Ø 0,40 BP (POLIDORO)	NOZZLE Ø 0,40 BP (POLIDORO)	_	_	1					
S/Nº	U102402000	TOBERA Ø 0,70 GN (POLIDORO)	NOZZLE Ø 0,70 GN (POLIDORO)	_	_	1					
5	Q223019000	TUERCA 3/8 GAS LATÓN	NUT 3/8 GAS BRASS	1	2	2					
6	U105635000	AMARRE QUEMADOR HORNO(HG)	OVEN BURNER FASTENING (HG)	1	2	2					
	Q012031000	TORNILLO EXAGONAL M5x10 A304	HEXAGONAL BOLT M5x10 A304	2	4	4					
	Q222041000	REMACHE EXAGONAL M4 (INOX)	HEXAGONAL RIVET M4 (INOX)	4	8	8					
	Q221342000	REMACHE EXAGONAL M5	HEXAGONAL RIVET M5	4	8	8					
7	U052401000	TOBERA Ø 1,45 BP	NOZZLE Ø 1.45 BP	1	2	_					
7	631000000	TOBERA Ø 1,40 BP	NOZZLE Ø 1.40 BP	_	_	1					
7	U262400000	TOBERA Ø 2,15 GN	NOZZLE Ø 2.15 GN	1	2	1					
8	X505724000	MANGUITO PORTATOBERAS	NOZZLE HOLDER SLEEVE	1	2	2					
9	U022638000	SOPORTE VALVULA SUPERIOR	SUPER.VALVE SUPPORT	1	2	_					
	Q152004000	TORNILLO APLASTADO M5x13	FLAT HEAD SCREW M5X13	4	8	_					
	Q221342000	REMACHE EXAGONAL M5	HEXAGONAL RIVET M5	2	4	_					
10	S113034000	PIEZOELECTRICO	PIEZOELECTRIC	1	2	1					

MOD.	HORNOS ESTATICOS / STATIC OVENS	ZONA / ZONE	PARTE FUNCIONAL GAS FUNCTIONAL PART GAS	PLANO DIAGRAM	C-2713

ITEM	CODIGO	DENOMINACION	TEXTO	HG9-10	HG9-20	HG9-15					NOTAS
11	U134324000	VALVULA MINISIT 0710.654	VALVE MINISIT 0710.654	1	2	1					
S/Nº	Q307041000	JUNTA TORICA 25,4x20,2x2,6	O-RING 25.4x20.2x2.6	2	4	2					
S/Nº	U134317000	MANDO NEGRO MINI 916.124	BLACK CTRL. MINI 916.124	1	2	1					
S/Nº	U134318000	CUBIERTA MINISIT 903.052	COVER MINISIT 903.052	1	2	1					
S/Nº	Q031322000	TORNILLO ALOMADO M4x15	CURVED SCREW M4X15	8	16	8					
S/Nº	U264300000	RACOR 3/8 906,252	CONNECTION 3/8 906.252	2	4	2					
S/Nº	U134323000	RACORD BICONO 6 958.031	BICONE CONNECTION 6 958.031	1	2	1					
12	U322118000	PILOTO COMPLETO 100.062	COMPLETE PILOT LIGHT 100,062	1	2	1					
S/Nº	X022131000	BUJIA	SPARK PLUG	_	_	1					
S/Nº	U323030000	CABLE BUJIA	SPARK PLUG CABLE	_	_	1					
S/Nº	U333003000	CABLE MASA ENCENDEDOR	LIGHTER EARTH CABLE	_	_	1					
13	U025062000	TUBO PILOTO EUROSIT QUEM.	PILOT PIPE EUROSIT BURNER	1	2	_					
13	U105008000	TUBO PILOTO HG9-15	PILOT PIPEHG9-15	_	_	1					
	U134323000	RACORD BICONO 6 958.031	BICONE CONNECTION 6 958.031	2	4	2					
	Q012031000	TORNILLO EXAGONAL M5x15 A304	HEXAGONAL BOLT M5x15 A304	2	4	2					
14	U562130000	TERMOPAR L=850	THERMOCOUPLE L=850	1	2	1					
15	U442137000	INYECTOR Ø 0,4 GN	INJECTOR Ø 0.4 GN.	1	2	1					
16	U025061000	TUBO COMPLETO EUROSIT QUEMA	COMPLETE PIPE EUROSIT BURN	1	2	_					
16	U105002000	TUBO COMP. QUEMADOR HORNO	OVEN BURNERCOMPLET. PIPE	_	_	1					
S/Nº	U264310000	MANGUITO 3/8"	HOSE 3/8"	_	_	1					
17	U202103000	MANGUITO REDUCCION 1/2-3/8"	REDUCTION HOSE 1/2-3/8"	1	2	1					
	Q306058000	ARANDELA 25x17X2.5	WASHER 25x17X2.5	1	2	1					
18	U202103000	MANGUITO REDUCCION 1/2-3/8"	REDUCTION HOSE 1/2-3/8"	1	2	1					
	Q306058000	ARANDELA 25x17X2.5	WASHER 25x17X2.5	1	2	1					
19	U025014000	ENTRADA MINISIT COMPL CG9-41	INPUT MINISIT COMPL CG9-41	1	2	1					
	Q306062000	ARANDELA Ø13,9X10,33x1,5	WASHER Ø13.9X10.33x1.5	8	16	8					
20	T985010000	TUBO ENTRADA COMPLETO	INPUT PIPE COMPL	1	2	_					
20	U105009000	TUBO ENTRADA COMPLE. HG9-15	INPUT PIPE COMPL HG9-15	_	_	1					

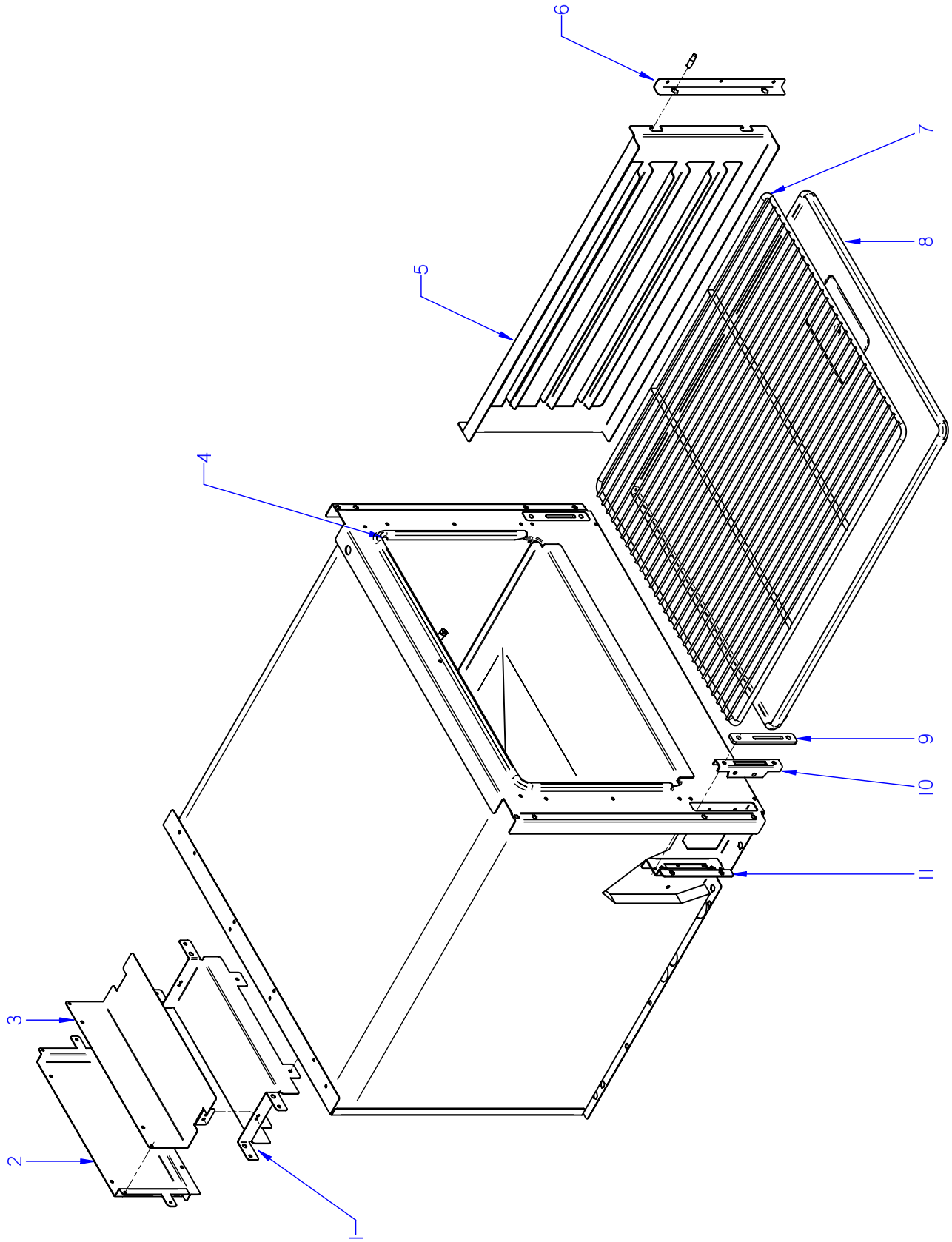

ITEM MARCADO EN COLOR = REPUESTO RECOMENDADO
COLOURED ITEM = RECOMMENDED SPARE PART

N plano	Firma	Fecha	Aparato	Lamina	
C-2714		2010-10	HORNO ELECTRICO / ELECTRIC OVEN HORNOS ESTATICOS HE9-10/20	4	Fagor Industrial S.Coop. FAGOR Oñate

MOD.	HORNOS ESTATICOS / STATIC OVENS	ZONA / ZONE	HORNO ELECTRICO / ELECTRIC OVEN	PLANO DIAGRAM	C-2714

ITEM	CODIGO	DENOMINACION	TEXTO	HE9-10	HE9-20						NOTAS
1	U022640000	DISTANCIADOR CHIMENEA	FLUEPIPE SPACER	1	2						
	Q419005000	REMACHE 4x8 ALMG3 / ALUMINIO	RIVET 4X8 ALMG3 / ALUMINIUM	12	24						
2	T985613000	POSTERIOR CHIMENEA	REAR FLUEPIPE	1	2						
3	T985618000	ANTERIOR CHIMENEA	FLUEPIPE FRONT	1	2						
4	U025623000	JUNTA PUERTA HORNO INOX	OVEN DOOR SEAL INOX.	1	2						
5	U915607000	GUIA LATERAL HORNO G700	OVEN SIDE GUIDE G700	2	4						
	Q151336000	TORNILLO SOPORTE GUIAS	GUIDE SUPPORT BOLT	4	8						
	Q302022000	ARANDELA 16X6X1.2 A.304	WASHER 16X6X1.2 A.304	4	8						
	Q221321000	REMACHE ROSCAD.NUTSERT.M6	THREADED RIVET .NUTSERT.M6	4	8						
6	U915616000	SUPLEMENTO AMARRE GUIA LAT.	SIDE GUIDE FAST. SUPPL.	2	4						
	Q412000000	REMACHE TUBULAR 4x8	TUBULAR RIVET 4x8	6	12						
7	U135642000	PARRILLA DE HORNO	OVEN TRAY	1	2						
8	U025636000	PLACA DE HORNO	OVEN PLATE	1	2						
9	U915619000	EMBELLECED GUIA BISAGRA	HINGE GUIDE TRIM	2	4						
	Q152045000	TORNILLO AMARRE M6X25	FASTENING BOLT M6X25	4	8						
10	U010512000	GUIA DE BISAGRA	HINGE GUIDE	2	4						
11	U915604000	AMARRE GUIA BISAGRA HORNO	OVEN HINGE GUIDE FASTENING	2	4						
	Q221342000	REMACHE EXAGONAL M5	HEXAGONAL RIVET M5	2	4						
	Q412000000	REMACHE TUBULAR 4x8	TUBULAR RIVET 4x8	6	12						
	Q222042000	REMACHE EXAGONAL ROSCA M6	HEXAGONAL RIVET THREAD M6	4	8						

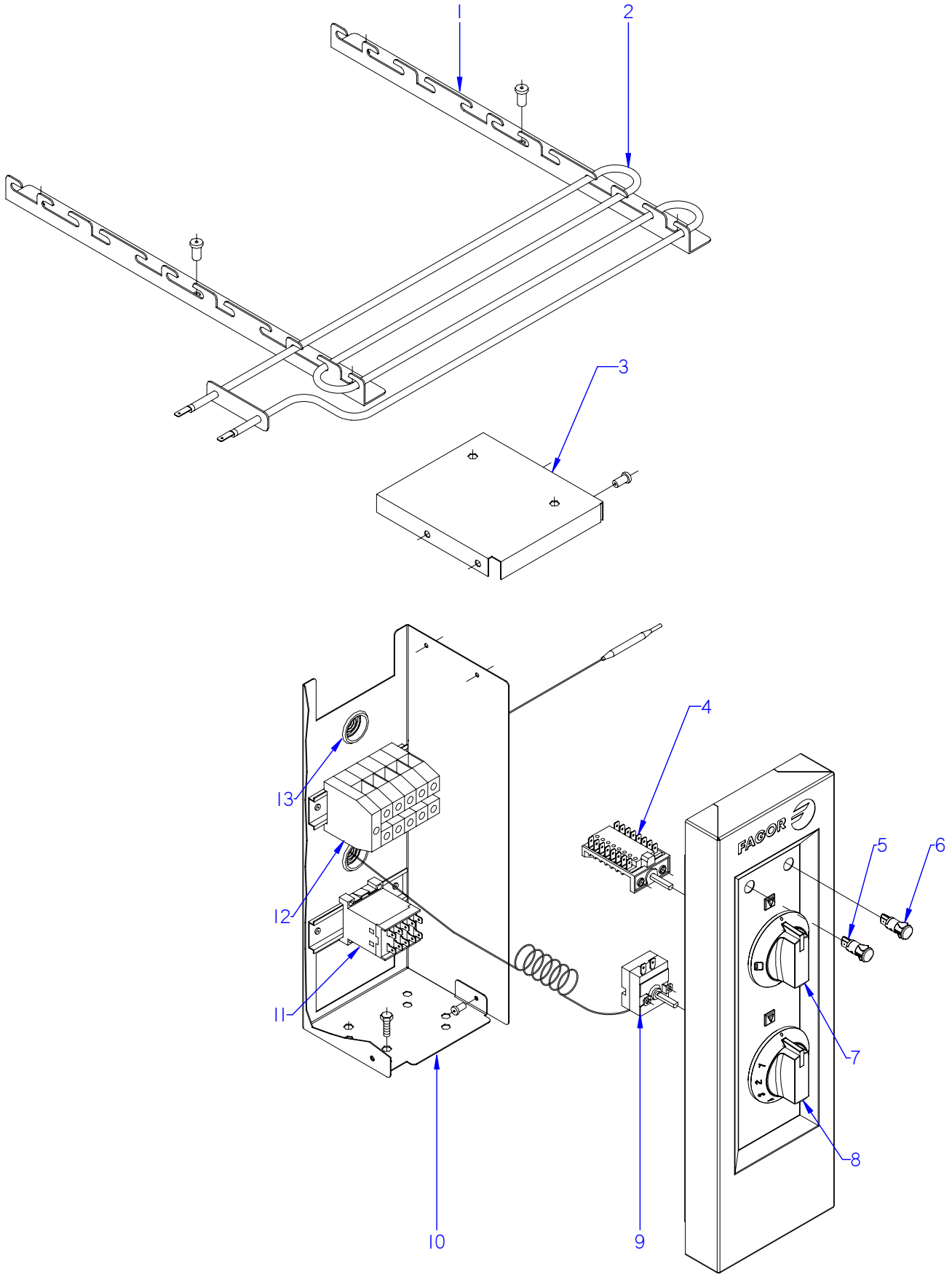

ITEM MARCADO EN COLOR = REPUESTO RECOMENDADO
COLOURED ITEM = RECOMMENDED SPARE PART

N plano	Firma	Fecha	Aparato	Lamina	
C-2715		2010-10	PARTE FUNCIONAL ELECTRICA / FUNCTIONAL PART ELECTRIC HORNOS ESTATICOS HE9-10/20	5	Fagor Industrial S.Coop. FAGOR Oñate

MOD.	HORNOS ESTATICOS / STATIC OVENS	ZONA / ZONE	PARTE FUNCIONAL ELECTRICA FUNCTIONAL PART ELECTRIC	PLANO DIAGRAM	C-2715

ITEM	CODIGO	DENOMINACION	TEXTO	HE9-10	HE9-20						NOTAS
1	U805613000	ESCUADRA SOPOR. RESISTENCIAS	SUPP. BRACKET RESISTORS	4	8						
	Q419005000	REMACHE 4x8 ALMG3 / ALUMINIO	RIVET 4X8 ALMG3 / ALUMINIUM	12	24						
2	U803004000	RESISTENCIA 1000W/230V	RESISTOR 1000W -230V	6	12						
3	U673051000	TAPA DE CUADRO ELECTRICO	ELECTRIC PANEL COVER	1	2						
	Q419005000	REMACHE 4x8 ALMG3 / ALUMINIO	RIVET 4X8 ALMG3 / ALUMINIUM	4	8						
	Q419005000	REMACHE 4x8 ALMG3 / ALUMINIO	RIVET 4X8 ALMG3 / ALUMINIUM	2	4						
	Q221342000	REMACHE EXAGONAL M5	HEXAGONAL RIVET M5	2	4						
	Q012032000	TORNILLO EXAGONAL M5x15 A304	HEXAGONAL BOLT M5x15	2	4						
	Q012032000	TORNILLO EXAGONAL M5x15 A304	HEXAGONAL BOLT M5x15	2	4						
4	U673006000	CONMUTADOR	SWITCH	2	4						
	Q151320000	TORNILLO ALOMADO M4x6 H.ZINC.	CURVED SCREW M4X6 H. ZINC	2	4						
5	R693055000	PILOTO VERDE 41227000C7	GREEN PILOT 41227000C7	1	2						
6	R693056000	PILOTO AMBAR	AMBER PILOT	1	2						
7	U173006000	MANDO MONTADO CE Ø6	CONTROL CE Ø6	1	2						
8	U173005000	MANDO CE Ø6 TERMOSTATO	CONTROL Ø6 THERMOSTAT	1	2						
9	X153000000	TERMOSTATO 50-310º C	THERMOSTAT 50-310 C	1	2						
	Q151320000	TORNILLO ALOMADO M4x6 H.ZINC.	CURVED SCREW M4X6 H. ZINC	2	4						
10	T963000000	CUADRO ELECTRICO	ELECTRICAL PANEL	1	2						
11	Z213007000	CONTACTOR 3TF2010-3AL2	CONTACTOR 3TF2010-3AL2	1	2						
	R663055000	GUIA CONTACTOR L-120	CONTACTOR GUIDE L-120	1	2						
	Q419005000	REMACHE 4x8 ALMG3 / ALUMINIO	RIVET 4X8 ALMG3 / ALUMINIUM	4	8						
12	P453025000	BORNES 10 WDU-10203.0	TERMINALS 10 WDU-10203.0	3	6						
	U803009000	BORNA PASO AZUL 16 MM.	BLUE TAP TERMINAL 16MM	1	2						
	P453026000	BORNA TIERRA 10 WPE-10103.0	TERMINAL TIER 10 WPE-10103.O	1	2						
	Z263303000	TOPE FINAL	END STOP	1	2						
	R663055000	GUIA CONTACTOR L-120	CONTACTOR GUIDE L-120	1	2						
13	X723014000	PASAMUROS AMETRO 30	AMETRO 30 WIRE PROTECTION	2	2						

MOD.	HORNOS ESTATICOS / STATIC OVENS	ZONA / ZONE	VARIOS / MISCELLANEOUS	PLANO DIAGRAM	

ITEM	CODIGO CODE	DENOMINACION	NAME	HG9-10	HG9-20	HG9-15	HE9-10	HE9-20			
	T986500000	FOLLETO DE INSTRUCIONES HG9	INSTRUCTION LEAFLET HG9	1	1	_	_	_			
	U026508000	FOLLETO DE INSTRUCIONES CG	INSTRUCTION LEAFLET CG	_	_	1	_	_			
	U176501000	FOLLETO DE INSTRUCIONES CE	INSTRUCTION LEAFLET CE	_	_	_	1	1			
	U673054000	ESQUEMA TEORICO ADHESIVO	THEOR. DIAGRAM LABEL	_	_	_	1	1			PLANO HC-76539
	U673008000	CABLEADO HORNO	OVEN WIRING	_	_	_	1	2			

HE9-10

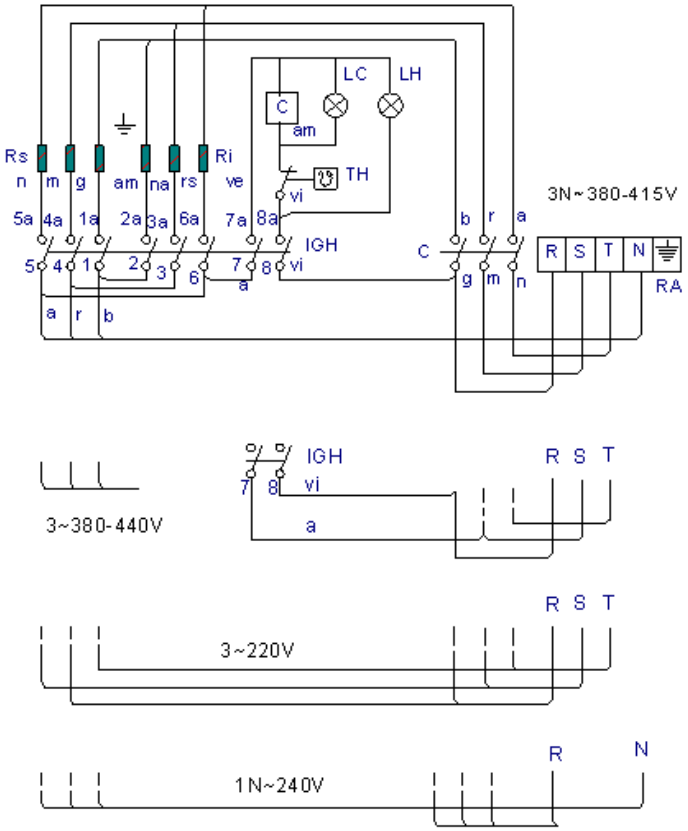

RA: Regleta de Alimentacion

IGH :Conmutador General Horno

C: Contactor

LC : Lampara Calentamiento Horno

LH: Lampara Horno Encendido

TH : Termostato de Horno

Rs : Resistencia Horno Superior

Ri : Resistencia Horno Inferior

r = rojo-red-rouge
m = marron-brown-marron
g = gris-grey-gris
n = negro-black-noir
a = azul-blue-bleu
b = blanco-white-blanc
vi = violeta-violette-violet
am = amarillo-yellow-jaune
na = naranja-orange-orange
rs = rosa-rose-pink
ve = verde-green-vert
am/ve = amarillo/verde-yellow/green-jaune/vert

	1 _ 2 1a 2a	3 _ 4 3a 4a	5 _ 6 5a 6a	7 7a	8 8a
0					
1	X	X	X	X	X
2	X	X	X	X	X
3		X	X	X	X

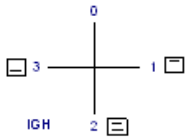

U673054

	Esquema teorico adhesivo			U-673054000		
N°	Pieza	Cant.	Material	N° Clasificacion	Acabado	
N°	Modificacion		Propuesta de	Fecha	Tolerancias generales	
					<5±	50–100± :
					5–25± :	>100±
					25–50± :	OX±

	Firma	Fecha
Dibujado	M.Arrillo	01-11-2002
Proyectado		
Comprobado		

FAGOR

Fagor Industrial,Koop.Elk., Mugarra

Escala: 1/1

Mecanizado superficial

COCINAS HE9-10

Plano numero: HC-76539

Sustituye al N°

Sustituido por

Planos bajo dalle reales y verificados por ingeniería