Mod./Type:	_70/... SPE... - _90/... SPE...	cod./num.	2531843.00
	EXTREME	data/date:	08/09/2014

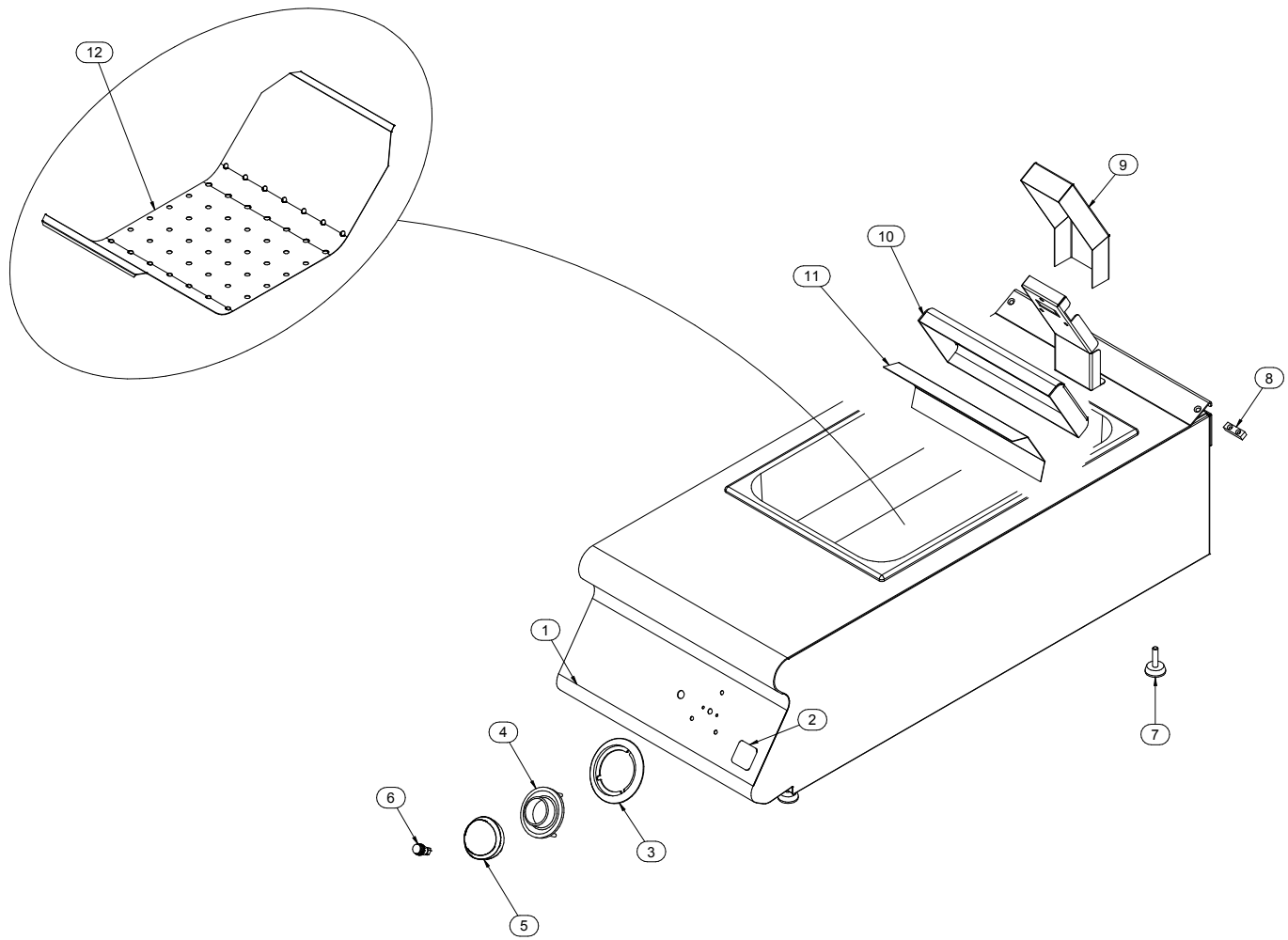

Mod./Type:	_70/... SPE... - _90/... SPE... EXTREME	cod./num.	2531845.00
		data/date:	08/09/2014

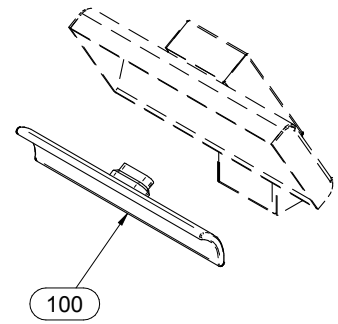

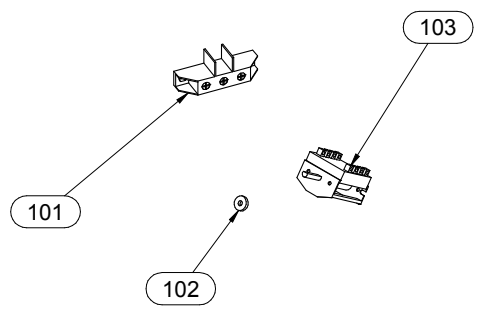

Mod./Type: **_70 - _90 .../40 ... - .../80 ... - .../120 ...**

VANO / CABINET - ...B - ...BE - ...BH2

cod./num. 2531578.00

data/date: 05/06/2014

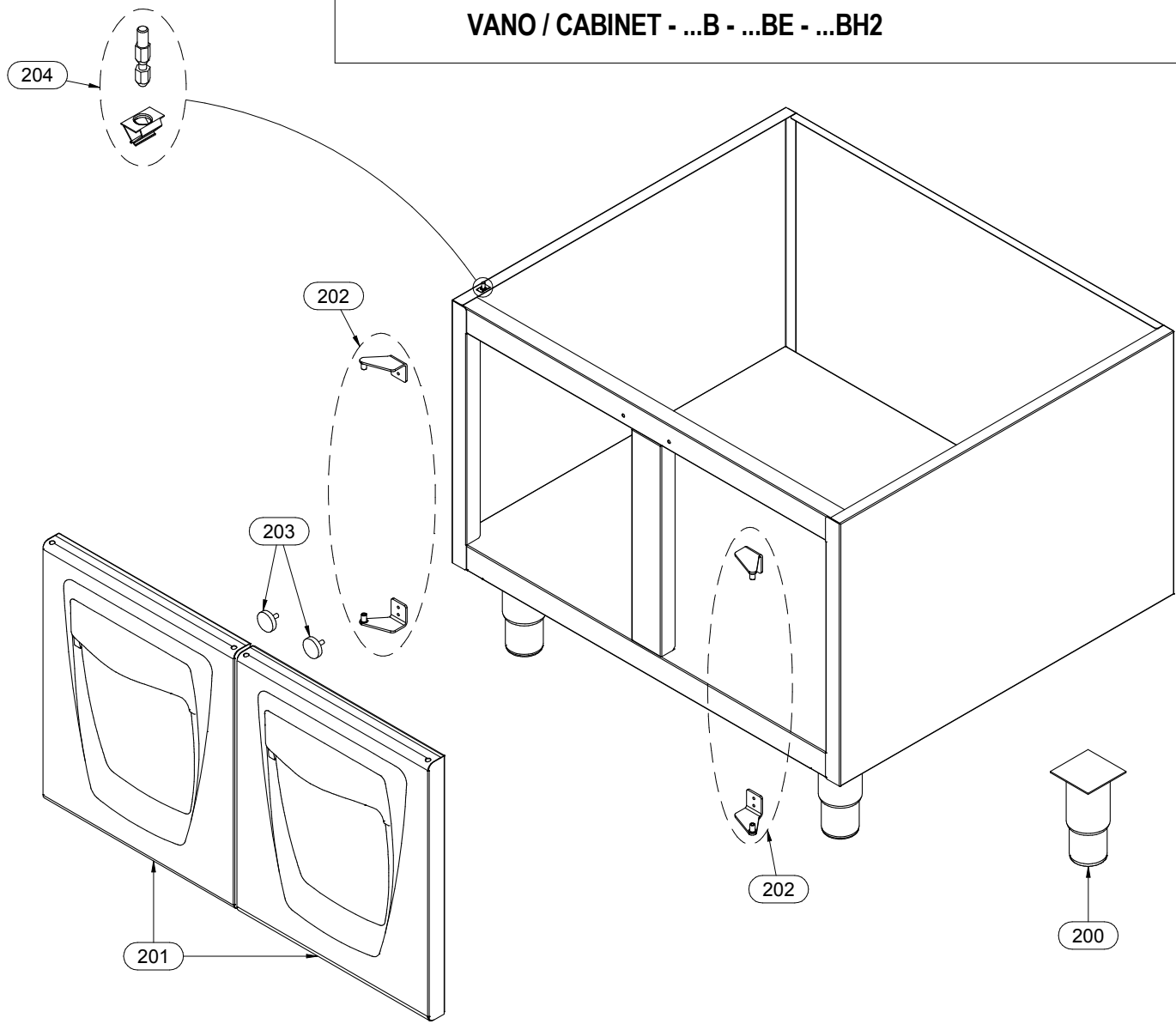

Mod.:	_70/... SPE... _90/... SPE...			cod. / num. 2531844.00 data / date 08/09/2014 rif. / ref. 2531843.00		RICAMBI CONSIGLIATI - RECOMMENDED SPARE PARTS - PIÈCES DÉTACHÉES RECOMMANDÉES - EMPFOHLENEN ERSATZTEILE	EM70/40 SPE...	EM90/40 SPE...	NOTE	
POS.	DESCRIZIONE	DESCRIPTION	DENOMINATION	BENENNUNG	COD.		Q.ty			
1	CRUSCOTTO	CONTROL PANEL	BANDEAU	BEDIENBLENDE	6111215.00		1	1		
2	MARCHIO	BRAND NAME	MARQUE	MARKENZEICHEN	982.021.00		1	1	**FROM: 15.12.2011**	**TO: 31.01.2014**
					982.023.00		1	1	**FROM: 01.02.2014**	**TO:...**
3	SERIGRAFIA	SCREEN PRINT	SÉRIGRAPHIE	SIEBDRUCK	910.169.00		1	1		
4	LABIRINTO	LABYRINTH	LABYRINTHE	LABYRINTH	256.235.00		1	1		
5	MANOPOLA	KNOB	BOUTON	DREHKNOPF	256.234.00	*	1	1		
6	LAMPADA SPIA ARANCIO	ORANGE INDICATOR LIGHT	LAMPE TEMOIN ORANGE	ORANGE KONTROLLAMPE	963.013.00		1	1		
7	PIEDINO	FOOT	PIED	STELLFUSS	951.083.00		4	4	SOLO VERSIONE (-T)	ONLY (-T) VERSION
8	PIASTRINA GIUNZIONE	FIXING PLATE	PLAQUETTE FIXAGE	BEFESTIGUNGSPLATTE	941.130.00		1	1		
9	CHIUSURA	LOCK	FERMETURE	SCHLUSS	9211550.00		1	1		
10	SUPPORTO RESISTENZE	HEATING ELEMENTS SUPPORT	SUPPORT ÉLÉMENTS CHAUFFANTS	HEIZELEMENTE TRÄGER	9211549.00		1	1	**FROM: 15.12.2011**	**TO: 27.01.2014**
					9211549.15		1	1	**FROM: 28.01.2014**	**TO:...**
11	SCHERMO RESISTENZA	HEATING ELEMENT PROTECTION	PROTECTION ÉLÉMENT CHAUFFANTE	DER BILDSCHIRM DES WIDERSTANDS	6221477.00		1	1	**FROM: 28.01.2014**	**TO:...**
12	FALSOFONDO	FALSE BOTTOM	FAUX-FOND	ABTROPFPLATTE	621.159.00		1	1		
13										
14										
15										
16										
17										
18										
19										
20										
21										
22										
23										
24										
25										
26										
27										
28										
29										
30										
31										
32										
33										
34										
35										
36										
37										

Mod.:	_70/... SPE... - _90/... SPE... EXTREME			cod. / num. 2531846.00 data / date 08/09/2014 rif. / ref. 2531845.00		_70/40 SPE...	_90/40 SPE...	NOTE
POS.	DESCRIZIONE	DESCRIPTION	DENOMINATION	BENENNUNG	COD.	Q.ty		
100	RESISTENZA	HEATING ELEMENT	RESISTANCE	HEINZELEMENT	665.010.00	1	1	
101	MORSETTIERA	TERMINAL BOARD	BORNES	KLEMMENBRETT	M566050000	1	1	
102	GUARNIZIONE	WASHER	GUARNITURE	DICHTUNGSRING	953.020.00	1	1	
103	COMMUTATORE	CHANGE-OVER SWITCH	COMMUTATEUR	UMSCHALTER	661.000.00	1	1	
104								
105								
106								
107								
108								
109								
110								
111								
112								
113								
114								
115								
116								
117								
118								
119								
120								
121								
122								
123								
124								
125								
126								
127								
128								
129								
130								
131								
132								
133								

Mod.:	_70/... - _90/… VANO / CABINET …B - …BE - …BH2			cod. / num. 2531579.00 data / date 05/06/2014 rif. / ref. 2531578.00		RICAMBI CONSIGLIATI - RECOMMENDED SPARE PARTS - PIECES DETACHÉES RECOMMANDÉES - EMPFOHLENEN ERSATZTEILE	EM70/40 ...	EM70/80 ...	EM70/120 ...	EM90/40 ...	EM90/80 ...	EM90/120 ...	NOTE	
POS.	DESCRIZIONE	DESCRIPTION	DENOMINATION	BENENNUNG	COD.		Q. ty							
200	PIEDINO	FOOT	PIED	STELLFUSS	912.090.00		4	4	4	4	4	4	**FROM: 15.12.2011**	**TO: 17.05.2013**
					912.090.14		4	4	4	4	4	4	**FROM: 18.05.2013**	**TO:...**
201	PORTA	DOOR	PORTE	TÜR	256.215.00		1	2	3	1	2	3		
202	COPPIA CERNIERE	GASKETS PAIR	COUPLE CHARNIÈRES	SCHARNIERPAAR	256.216.00		1	2	3	1	2	3		
203	MAGNETE	MAGNET	MAGNÉTO	MAGNET	684.007.00		1	2	3	1	2	3	**FROM: 15.12.2011**	**TO: 01.01.2014**
					984.006.00		1	2	3	1	2	3	**FROM: 02.01.2014**	**TO:...**
204	FISSAGGIO	FIXING	FIXAGE	BEFESTIGUNG	256.431.00		4	4	4	4	4	4	**FROM: 04.05.2015**	**TO:...**
205														
206														
207														
208														
209														
210														
211														
212														
213														
214														
215														
216														
217														
218														
219														
220														
221														
222														
223														
224														
225														
226														
227														
228														
229														
230														
231														
232														
233														
234														