Mod./Type:	**HT 50... - HT 51...** **HT 52...DT - HT 53...DT**	cod./num.	2532221.00
		data/date:	08/06/2015

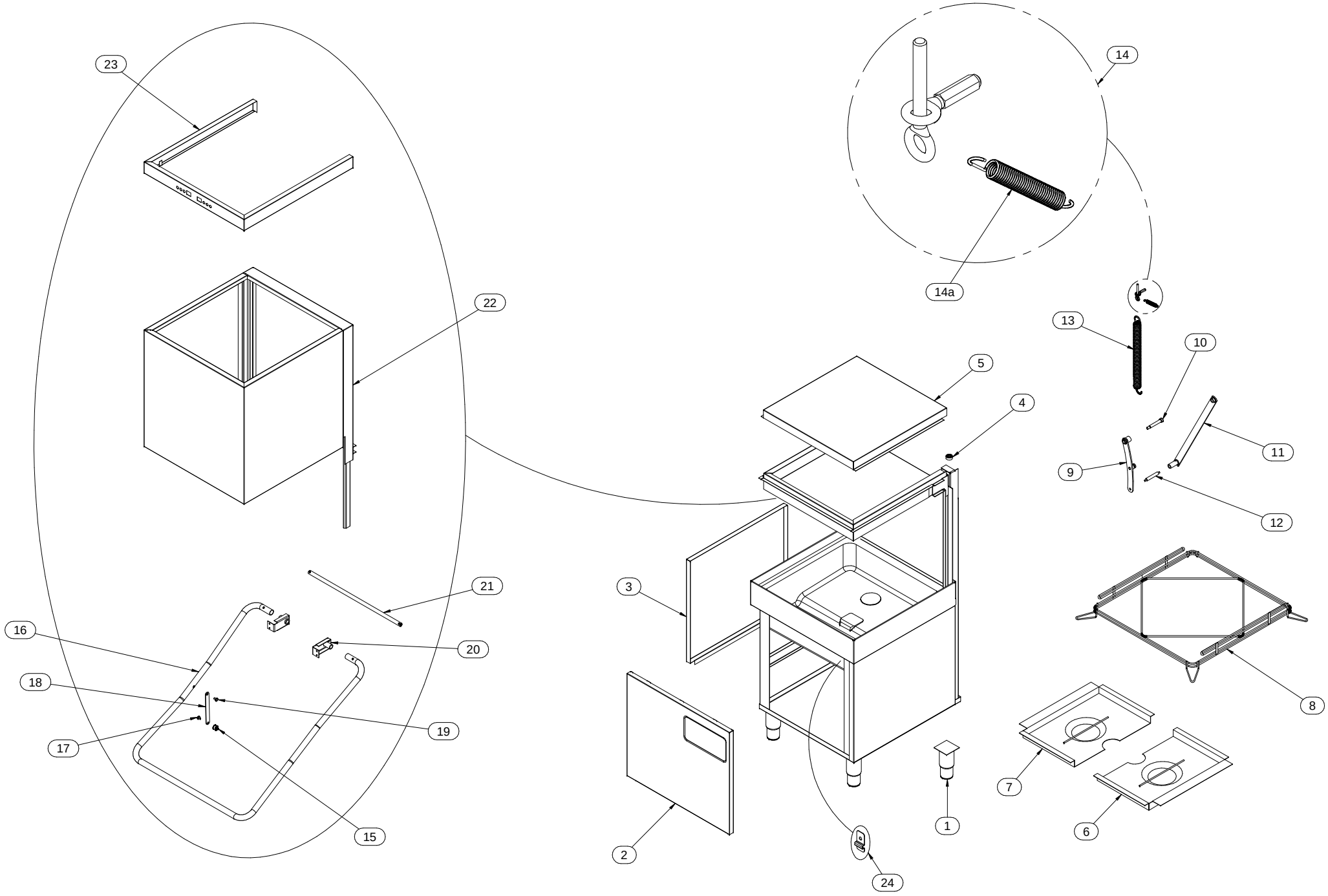

Mod.:	HT 50… - HT 51… HT 52…DT - HT 53…DT			cod. / num. 2532222.00 data / date 08/06/2015 rif. / ref. 2532221.00		RICAMBI CONSIGLIATI - RECOMMENDED SPARE PARTS - PIÈCES DÉTACHÉES RECOMMANDÉES - EMPFOHLENEN ERSATZTEILE	HT 50…	HT 51…	HT 52…DT	HT 53…DT	NOTE	
POS.	DESCRIZIONE	DESCRIPTION	DENOMINATION	BENENNUNG	COD.		Q.ty					
1	PIEDINO	FOOT	PIED	STELLFUSS	912.033.00		4	4	4	4	**FROM: 17.11.2012**	**TO: 18.11.2013**
					912.090.14		4	4	4	4	**FROM: 18.11.2013**	**TO: …**
2	PANNELLO FRONTALE	FRONTAL PANEL	PANNEAU FRONTAL	FRONTPLATTE	421.215.00		1	1			**FROM: 17.11.2012**	**TO: 10.12.2013**
					421.215.13		1	1			**FROM: 11.12.2013**	**TO: …**
					421.230.00				1			
					421.227.00					1		
3	PANNELLO LATERALE	LATERAL PANEL	PANNEAU LATERAL	SEITLICHES PANEL	421.197.00		2	2	2	2		
4	FERMO CAPPOTTA	HOOD STOP	ARRÊT CAPOT	VERRIEGELUNG DES HAUBENSPÜLER	451.077.00		4	4	4	4		
5	COPERCHIO	LID	COUVERCLE	DECKEL	421.208.00		1	1	1			
					421.228.00					1		
6	FILTRO	FILTER	FILTER	FILTER	411.076.00		-	1	1	1		
7	FILTRO	FILTER	FILTER	FILTER	411.077.00		-	1	1	1		
8	SUPPORTO CESTI	SUPPORT FOR BASKET	SUPPORT POUR PANIER	KORBTRÄGER	483.028.00		1	1	1	1		
9	TIRANTE	TIE ROD	TIRANT	SPANNSTANGE	412.289.00		1	1	1	1	**FROM: 17.11.2012**	**TO: 25.04.2014**
					256.446.00		1	1	1	1	**FROM: 26.04.2014**	**TO: …**
10	VITE	SCREW	VIS	SCHRAUBE	0313.10065.8		1	1	1	1	**FROM: 17.04.2014**	**TO: …**
11	PUNTONE	STRUT	CHEVRON	DRUCKSTAB	412.290.00		1	1	1	1	**FROM: 17.11.2012**	**TO: 25.04.2014**
					411.175.00		1	1	1	1	**FROM: 26.04.2014**	**TO: …**
12	PERNO SCORRIMENTO	SLIDING PIN	ÉPINGLE COULISSANTE	SCHIEBEBOLZEN	441.076.00		1	1	1	1		
13	MOLLA	SPRING	RESSORT	FEDER	260.019.00		1	1	1	1		
14	SICUREZZA	SAFETY	SÉCURITÉ	SICHERHEIT	256.447.00		1	1	1	1		
14a	MOLLA	SPRING	RESSORT	FEDER	260.020.00		1	1	1	1		
15	BOCCOLA	PLAIN BEARING	PALIER LISSE	BUCHSE	256.448.00		2	2	2	2		
16	MANIGLIONE	HANDLE	POIGNÉE	GRIFF	412.291.00		1	1	1	1		
17	FISSAGGIO LAMINA	FOIL FIXING	FIXATION FEUILLE	BEFESTIGUNG DER FOLIE	441.113.00		2	2	2	2		
18	LAMINA	FOIL	FEUILLE	FOLIE	423.205.00		2	2	2	2		
19	FISSAGGIO LAMINA	FOIL FIXING	FIXATION FEUILLE	BEFESTIGUNG DER FOLIE	441.122.00		2	2	2	2		
20	SUPPORTO MANIGLIONE	HANDLE SUPPORT	SUPPORT POIGNÉE	HALTERUNG DES GRIFF	411.167.00		2	2	2	2		
21	TUBO POSTERIORE	REAR PIPE	TUYAU ARRIÈRE	HINTENEN ROHR	431.109.00		1	1	1	1		
22	CAPPOTTA	HOOD	CAPOT	HAUBENSPÜLER	411.166.13		1	1	1			
					256.449.13					1		
23	PANNELLO COMANDI	CONTROL PANEL	TABLEAU DE CONTRÔLE	KONTROL PANEL	411.176.00		-	-	-	1		
24	FISSAGGIO SONDA VASCA	TANK PROBE FIXING	FIXATION SONDE CUVE	BEFESTIGUNG DER PROBE AM TANK	423.212.00		-	-	1	1		
25												
26												
27												
28												
29												
30												
31												
32												
33												
34												
35												

Mod./Type:	HT 50...	cod./num.	2532228.00
	HT 51...	data/date:	08/06/2015

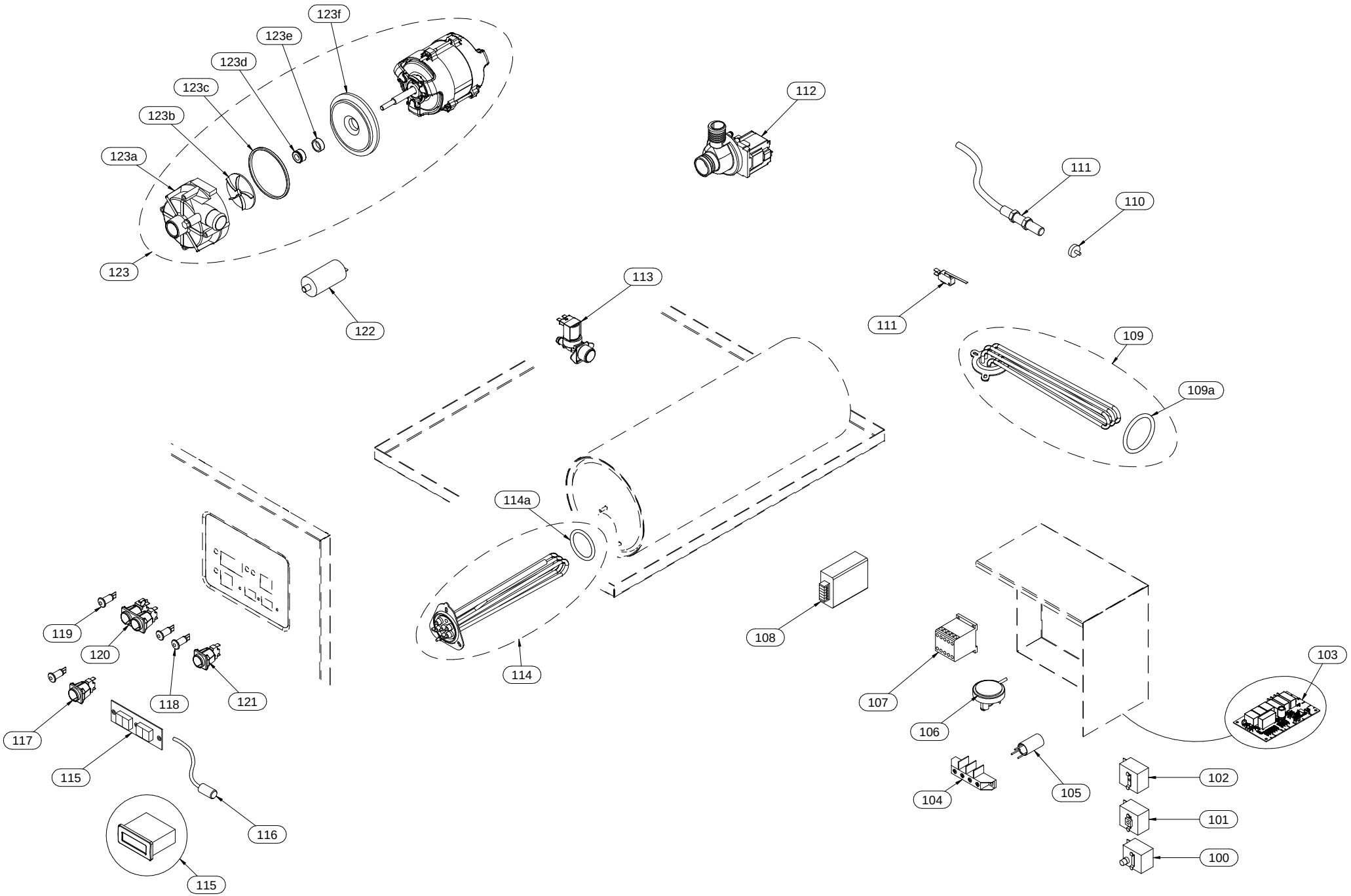

Mod.:	HT 50… HT 51…			cod. / num. 2532229.00 data / date 08/06/2015 rif. / ref. 2532228.00		RICAMBI CONSIGLIATI - RECOMMENDED SPARE PARTS - PIECES DETACHÉES RECOMMANDÉES - EMPFOHLENEN ERSATZTEILE	HT 50	HT 50 A	HT 50 PS	HT 50 A PS	HT 51	HT 51 A	HT 51 PS	HT 51 A PS	NOTE	
POS.	DESCRIZIONE	DESCRIPTION	DENOMINATION	BENENNUNG	COD.		Q.ty									
100	TERMOSTATO SICUREZZA	SAFETY THERMOSTAT	THERMOSTAT DE SECURITÉ	SICHERHEITSTHERMOSTAT	461.071.00	*	1	1	1	1	1	1	1	1		
101	TERMOSTATO BOILER	BOILER THERMOSTAT	THERMOSTAT CHAUFFE-EAU	BOILER -THERMOSTAT	461.016.00	*	1	1	1	1	1	1	1	1		
102	TERMOSTATO VASCA	TUB THERMOSTAT	THERMOSTAT CUVE	TANKTHERMOSTAT	461.015.00	*	1	1	1	1	1	1	1	1		
103	SCHEDA RELÉ	RELAY BOARD	CARTE DE RELAIS	RELAISPLATINE	256.444.00	*	1	1	1	1	1	1	1	1	FROM: 01.11.2012	TO: 02.06.2013
					256.444.13	*	1	1	1	1	1	1	1	1	FROM: 03.06.2013	TO:...
104	MORSETTIERA	TERMINAL BOARD	BORNES	KLEMMENBRETT	663.036.00		1	1	1	1	1	1	1	1		
105	FILTRO ANTIDISTURBO	LIMITER FILTER	FILTRE DE BRUIT	ANTIJAMMING FILTER	464.067.00		3	3	3	3	3	3	3	3		
106	PRESSOSTATO	PRESSURE SWITCH	PRESSOSTAT	NIVEAUSCHALTER	462.003.00	*	1	1	1	1	1	1	1	1		
107	CONTATTORE	CONTACTOR	CONTACTEUR	FERNSCHALTER	461.021.00	*	2	2	2	2	2	2	2	2		
108	ALIMENTATORE	POWER SUPPLY	ALIMENTATEUR	NETZANSCHLUSSGERÄT	-		-	-	-	-	-	-	-	-	FROM: 01.11.2012	TO: 30.04.2014
					461.103.00	*	-	-	-	-	1	1	1	1	FROM: 01.05.2015	TO:...
109	RESISTENZA VASCA	SAFETY RELAY CONTACTS	RES. CUVE	TANKHEIZKORPER	465.009.00	*	1	1	1	1	1	1	1	1		
109a	GUARNIZIONE RESISTENZA	HEATING ELEMENT GASKET	JOINT DE LA RÉSISTENCE	WIDERSTAND-DICHTUNG	0835.53374.1		1	1	1	1	1	1	1	1		
110	MAGNETE	MAGNET	MAGNÉTO	MAGNET	-		-	-	-	-	-	-	-	-	FROM: 01.11.2012	TO: 30.04.2014
					684.007.00		1	1	1	1	1	1	1	1	FROM: 01.05.2015	TO:...
111	MICROINTERRUTTORE	MICROSWITCH	MICROINTERRUPTEUR	SICHERUNGSSCHALTER	412.075.00	*	1	1	1	1	1	1	1	1	FROM: 01.11.2012	TO: 30.04.2014
					461.106.00	*	1	1	1	1	1	1	1	1	FROM: 01.05.2015	TO:...
112	POMPA SCARICO	EXHAUST PUMP	ELECTROPOMPE DE VIDANGE	ABLAUF PUMPE	464.037.00		-	-	1	1	-	-	1	1		
113	ELETTROVALVOLA	SOLENOID VALVE	ELECTROVANNE	ELEKTROVENTIL	462.000.00	*	1		1		1		1			
					256.371.00	*		1		1		1		1		
114	RESISTENZA BOILER	BOILER RESISTANCE	RES. CHAUFFE- EAU	BOILERHEIZKORPER	465.006.00		1	1	1	1						
					465.007.00						1	1	1	1		
114a	GUARNIZIONE RESISTENZA	HEATING ELEMENT GASKET	JOINT DE LA RÉSISTENCE	WIDERSTAND-DICHTUNG	0835.53470.1		1	1	1	1	1	1	1	1		
115	TERMOMETRO	THERMOMETER	TERMOMÈTRE	THERMOMETER	461.050.00	*	2	2	2	2	2	2	2	2	FROM: 01.11.2012	TO: 31.11.2013
					461.101.00	*	1	1	1	1	1	1	1	1	FROM: 01.12.2013	TO:...
116	SONDE	PROBE ASSEMBLY	GROUPE SONDE	SONDEGRUPPE	-		-	-	-	-	-	-	-	-	FROM: 01.11.2012	TO: 31.11.2013
					461.102.00	*	2	2	2	2	2	2	2	2	FROM: 01.12.2013	TO:...
117	PULSANTE	BUTTON	BOUTON	TASTE	461.092.00	*	1	1	1	1	1	1	1	1		
118	LAMPADA SPIA ARANCIO	ORANGE INDICATOR LIGHT	LAMPE TEMOIN ORANGE	ORANGE KONTROLLAMPE	463.012.00		2	3	2	3	2	3	2	3		
119	LAMPADA SPIA VERDE	GREEN INDICATOR LIGHT	LAMPE TEMOIN VERTE	GRUENE KONTROLLAMPE	463.014.00		1	1	1	1	1	1	1	1		
120	INTERRUTTORE DOPPIO	DOUBLE SWITCH	INTERRUPTEUR DOUBLE	DOPPELSCHALTER	461.093.00	*	1	1	1	1	1	1	1	1		
121	INTERRUTTORE	SWITCH	INTERRUPTEUR	SCHALTER	461.094.00	*					1	1	1	1		
					461.098.00	*	1	1	1	1						
122	CONDENSATORE	CONDENSER	CONDENSEUR	KONDENSATOR	464.110.00		1	1	1	1	1	1	1	1		
123	ELETTROPOMPA	MOTOR PUMP	ELECTROPOMPE	ELEKTROPUMPE	464.015.00		1	1	1	1	1	1	1	1		
123a	COCLEA	HELIX SCREW	PELLETEUSE HELICOÏDALE	FÖRDERSCHNECKE	464.023.00		1	1	1	1	1	1	1	1		
123b	GIRANTE	IMPELLER	ROUE	IMPELLER	464.021.00		1	1	1	1	1	1	1	1		
123c	GUARNIZIONE	SEAL	JOINT	DICHTUNG	464.019.00		1	1	1	1	1	1	1	1		
123d	TENUTA ROTANTE	ROTATING SEAL	BOURRAGE DE POMPE	DREHDICHTUNG	464.020.00		1	1	1	1	1	1	1	1		
123e	TENUTA FISSA	FIXED SEAL	ÉTANCHÉITÉ FIXE	FIXE DICHTUNG	464.026.00		1	1	1	1	1	1	1	1		
123f	SUPPORTO COCLEA	HELIX SCREW SUPPORT	SUPPORT PELLETEUSE HELICOÏDALE	ABSTÜTZUNG FÜR FÖRDERSCHNECKE	464.018.00		1	1	1	1	1	1	1	1		
124																
125																
126																
127																
128																

Mod./Type: **DWD 45...**
DW 5.... - DWD 51... - DWD 59... - HT 5...

cod./num. 2532183.00

data/date: 25/05/2015

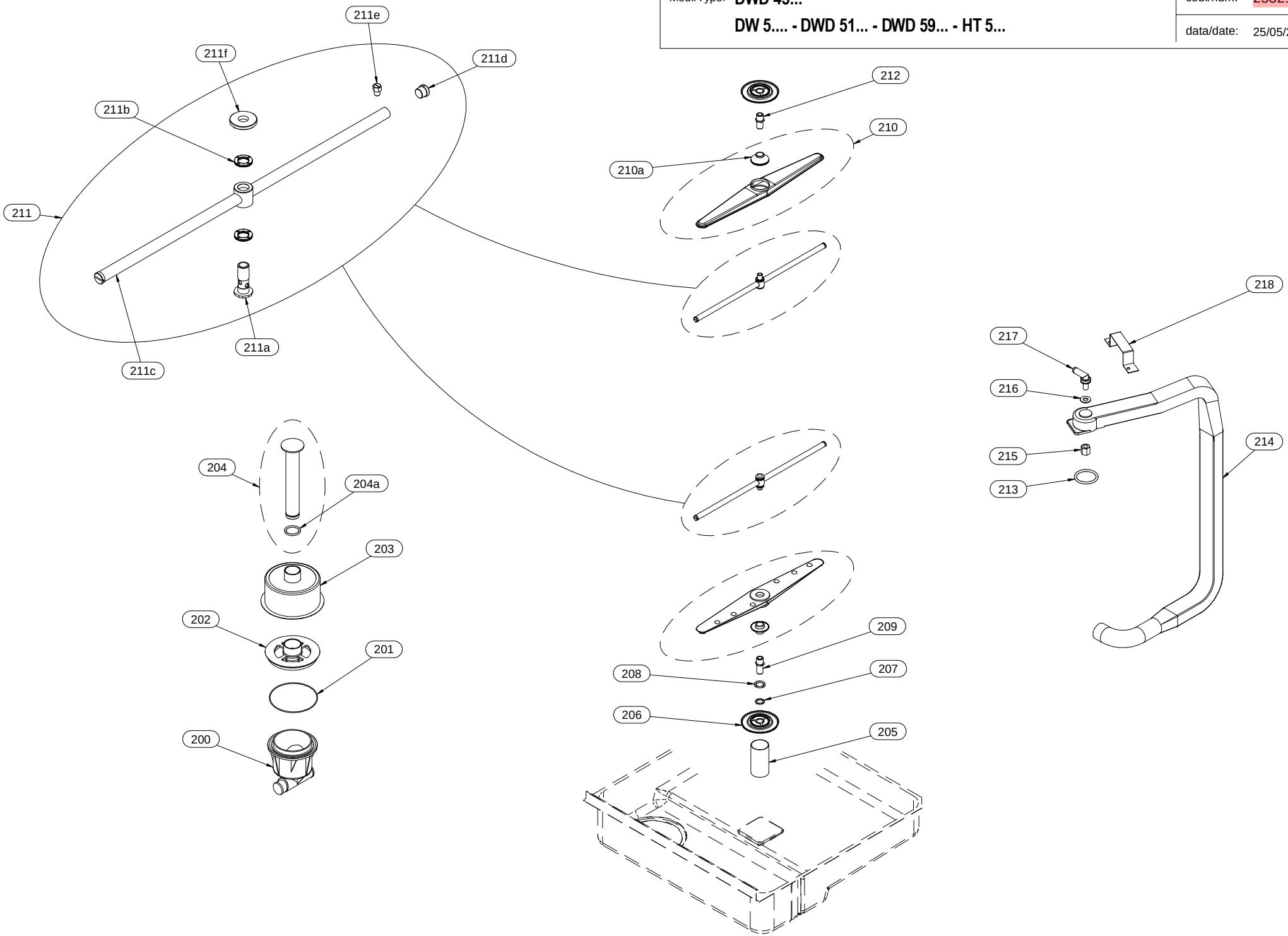

Mod.:	DWD 45 DW 5... - DWD 51... - DWD 59... - HT 5...			cod. / num. 2532184.00 data / date 25/05/2015 rif. / ref. 2532183.00		RICAMBI CONSIGLIATI - RECOMMENDED SPARE PARTS - PIÈCES DÉTACHÉES RECOMMANDÉES - EMPFOHLENEN ERSATZTEILE	DWD 45...	DW 5...	DWD 51...	DWD 59...	HT 5...	NOTE
POS.	DESCRIZIONE	DESCRIPTION	DENOMINATION	BENENNUNG	COD.		Q. ty					
200	SCARICO	DRAIN	VIDANGE	ABLAUF	451.025.00		1	1	1	1	1	
201	GUARNIZIONE	WASHER	GUARNITURE	DICHTUNGSRING	0835.35101.1		1	1	1	1	1	
202	GHIERA	FERRULE	VIROLE	NUTMUTTER	451.022.14		1	1	1	1	1	
203	FILTRO SCARICO	EXHAUST FILTER	FILTRE D'ECHAPPEMENT	ABLAUFFILTER	412.260.00		1					
					412.055.14			1	1	1		
					412.056.14						1	
204	TROPPOPIENO	OVERFLOW PIPE	TROP-PLEIN	ÜBERLAUF	410.282.00		1					
					410.283.00			1	1	1		
					410.284.00						1	
204a	GUARNIZIONE	WASHER	GUARNITURE	DICHTUNGSRING	0835.26266.1	*	1	1	1	1	1	
205	RACCORDO	CONNECTOR	RACCORD	ANSCHLUSS	431.103.00		1					
					431.052.00			1	1	1		
					431.080.00						1	
206	PARZIALIZZATORE	SPLITTER	RONDELLE DE PARTIALISATION	ABZWEIGER	451.132.00		2					
					424.006.00			2	2	2	2	
207	PARZIALIZZATORE	SPLITTER	RONDELLE DE PARTIALISATION	ABZWEIGER	423.193.00		1					
					423.058.00			1	1	1	1	
208	GUARNIZIONE	WASHER	GUARNITURE	DICHTUNGSRING	0835.17124.1		-	-	1	1	1	
209	PERNO LAVAGGIO INF.	LOWER WASHING PIVOT	GOUJON LAVAGE INFÉRIEUR	STIFT UNTERER SPÜLUNG	441.059.00		1					
					441.085.00			1				
					412.033.00				1	1		
					412.079.00						1	
210	GIRANTE LAVAGGIO	WASH ARM	BRAS DE LAVAGE	WASCHARM	256.375.00		2					
					256.373.00			2	2	2		
					256.374.00						2	
210a	SUPPORTO GIRANTE	IMPELLER SUPPORT	SUPPORT BRAS DE LAVAGE	LAUFRADHALTERUNG	451.066.00		2					
					451.021.13			2	2	2	2	
211	GIRANTE RISCIACQUO	RINSE IMPELLER	GROUPE BRAS RINÇAGE	AUSSPÜLUNGSARMGRUPPE	412.275.00		2					
					412.199.00			2	2	2		
					412.200.00						2	
211a	PERNO RISCIACQUO	RINSING PIN	GOUJON RINÇAGE	SPUELSTIFT LB LS	441.057.00		2	2	2	2	2	
211b	RONDELLA RISCIACQUO	RINSING GASKET	RONDELLE RINÇAGE	AUSSPÜLUNGSUNTERLEGSCHEIBE	451.024.00		4	4	4	4	4	
211c	GIRANTE RISCIACQUO	RINSE IMPELLER	GROUPE BRAS RINÇAGE	AUSSPÜLUNGSARMGRUPPE	412.034.00		2	2	2	2		
					412.083.00						2	
211d	TAPPO RISCIACQUO	RINSE PLUG	BOUCHON RINÇAGE	AUSSPÜLUNGSSTÖPSEL	451.028.00		4	4	4	4	4	
211e	UGELLO RISCIACQUO	RINSE INJECTOR	INJECTEUR DE RINCAGE	NACHSPUELDUESE	441.040.00		10	12	12	12	14	
211f	GHIERA	FERRULE	VIROLE	NUTMUTTER	441.044.00		2	2	2	2	2	
212	PERNO LAVAGGIO SUP.	UPPER WASHING PIN	GOUPILLE LAVAGE SUPERIEURE	OBERER STIFT WASCHHVORGANG	441.094.00		1					
					441.041.00			1	1	1	1	
213	GUARNIZIONE	WASHER	GUARNITURE	DICHTUNGSRING	0835.35440.1		1	1	1	1	1	
214	TUBO MANDATA	DELIVERY PIPE	TUYAU DE REFOULEMENT	ZULEITUNGSROHR	412.170.00		1	1	1			
					412.171.00					1		
					412.173.00						1	
215	DADO	NUT	ÈCROU	MUTTER	441.045.00		1	1	1	1	1	
216	GUARNIZIONE	WASHER	GUARNITURE	DICHTUNGSRING	0840.25122.0		1	1	1	1	1	
217	RACCORDO	CONNECTOR	RACCORD	ANSCHLUSS	412.032.15		1	1	1	1	1	
218	FISSAGGIO	FIXING	FIXAGE	BEFESTIGUNG	423.064.00		1	1	1	1	1	
219												
220												
221												
222												
223												
224												

Mod./Type:	**GW 35... - GW 4... - GWD 4... - DWD 45...** **DW 5... - DWD 51... - DWD 59...**	cod./num.	2532185.00
		data/date:	22/06/2015

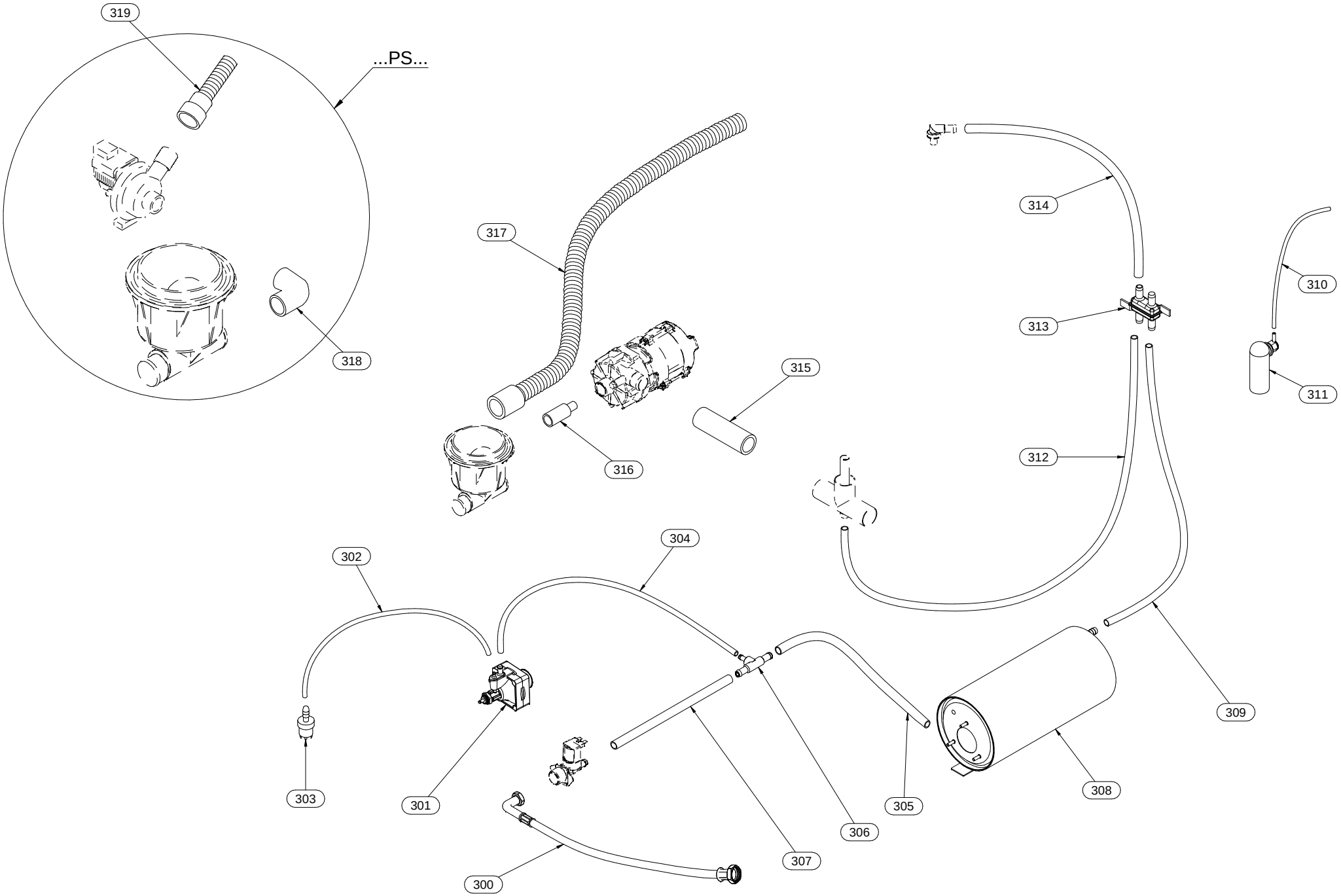

Mod.:	HT 50… - HT 51…. HT 52…DT - HT 53…DT			cod. / num. 2532232.00 data / date 27/05/2015 rif. / ref. 2532185.00		RICAMBI CONSIGLIATI - RECOMMENDED SPARE PARTS - PIÈCES DÉTACHÉES RECOMMANDÉES - EMPFOHLENEN ERSATZTEILE	HT 50… - HT 51…	HT 50 PS… - HT 51 PS…	HT 52… - HT 53…	HT 52 PS… - HT53 PS…	NOTE
POS.	DESCRIZIONE	DESCRIPTION	DENOMINATION	BENENNUNG	COD.		Q. ty				
300	TUBO CARICO	INLET HOSE	TUYAU DE CHARGEMENT	BELASTUNG-ROHR	452.033.00		1	1	1	1	
301	DOSATORE BRILLANTANTE	RINSE AID ADDITIVE DISPENSER	DOSEUR PRODUIT DE RINÇAGE	NACHSPUELMITTELGERAET	471.011.00	*	1	1	1	1	
302	TUBO 4x6	PIPE D.4 X 6	TUYAU 4X6	ROHR 4x6	452.039.00		1	1	1	1	
303	FILTRO ASPIRAZIONE	SUCTION FILTER	FILTRE ASPIRATION	ANSAUGFILTER	451.048.00		1	1	1	1	
304	TUBO 8x15	PIPE 8x15	TUYAU 8x15	ROHR 8x15	452.144.00		1	1	1	1	
305	TUBO 12x19	PIPE 12x19	TUYAU 12x19	ROHR 12x19	452.136.00		1	1	1	1	
306	RACCORDO A T	T-FITTING	RACCORD À T	T-STÜCK	451.133.00		1	1	1	1	
307	TUBO 12x19	PIPE 12x19	TUYAU 12x19	ROHR 12x19	452.148.00		1	1	1	1	
308	BOILER	RINSE TANK	GROUPE CHAUDIERE	BOILERGRUPPE	410.280.00		1	1			
					410.281.00				1	1	
309	TUBO 12x19	PIPE 12x19	TUYAU 12x19	ROHR 12x19	452.142.00		1	1			
					452.105.00				1	1	
310	TUBO 4x8	PIPE 4x8	TUYAU 4x8	ROHR 4x8	452.114.00		1	1	1	1	
311	CAMPANA PRESSOSTATO	AIR TRAP	CLOCHE DU PRESSOSTAT	DRUCKWAECHTER	451.083.00		1	1	1	1	
312	TUBO 12x19	PIPE 12x19	TUYAU 12x19	ROHR 12x19	452.080.00		1	1	1	1	
313	RIPARTITORE	DISTRIBUTOR	RÉPARTITEUR	VERTEILER	451.042.00		1	1	1	1	
314	TUBO 12x19	PIPE 12x19	TUYAU 12x19	ROHR 12x19	452.080.00		1	1	1	1	
315	RACCORDO MANDATA	DELIVERY FITTING	RACCORD DE REFOULEMENT	ZULEITUNGSANSCHLUSS	452.031.00		1	1			
					452.074.00				1	1	
316	RACCORDO ASPIRAZIONE	SUCTION FITTING	RACCORD ASPIRATION	ABSAUGANSCHLUSS	452.030.00		1	1			
					452.095.00				1	1	
317	TUBO SCARICO	EXHAUST PIPE	TUYAU D'ÉCHAPPEMENT	ABLAUFROHR	452.034.00		1	-	1	-	
318	RACCORDO SCARICO	DISCHARGE CONNECTION	COUPLEUR DE VIDANGE	ABLAUFANSCHLUSS	452.067.00		-	1	-	1	
319	TUBO SCARICO	EXHAUST PIPE	TUYAU D'ÉCHAPPEMENT	ABLAUFROHR	452.042.00		-	1	-	1	
320											
321											
322											
323											
324											
325											
326											
327											
328											
329											
330											
331											
332											
333											
334											
335											