SIMAG

SCN 35
SCN 45

R 134 A VERSION

SPARE PARTS LIST
CATALOGO RICAMBI
CATALOGUE PIÈCES DÉTACHÉES
ERSATZTEILENKATALOG

090090.07 REV. 09/2015

PAGE PAGINA PAGE SEITE	TABLE OF CONTENTS	INDICE	TABLE DES MATIERES	INHALTVERZEICHNIS
1	TABLE OF CONTENTS	INDICE	TABLE DES MATIERES	INHALTVERZEICHNIS
2/3	UNIT PANELS	ASSIEME MOBILE	ENS. CAROSSERIE	MACHINE GEHAUSE
4/5	REFRIGERANT SYSTEM AIR COOLED	SISTEMA REFRIGERANTE RAFFR. AD ARIA	CIRCUIT FRIGORIFIQUE REFROID. A AIR	GEFRIERSYSTEM LUFTGEKUEHLT
6/7	REFRIGERANT SYSTEM WATER COOLED	SISTEMA REFRIGERANTE RAFFR. AD ACQUA	CIRCUIT FRIGORIFIQUE REFROID. A EAU	GEFRIERSYSTEM WASSERGEKUEHLT
8/9	WATER SYSTEM	CIRCUITO IDRAULICO	CIRCUIT HYDRAULIQUE	WASSER SYSTEM
10/11	CONTROL BOX	SCATOLA DI CONTROLLO	BOITE ELECTRIQUE	SCHALTSCHRANK
12	COMPRESSOR AND ELECTRIC COMPONENT CHARTS	TABELLA COMPRESSORI E COMPONENTI ELETTRICI	LISTE DES COMPRESSEURS ET COMPOSANTS ELECTRIQUE	KOMPRESSOR UND ELEKTRISCHER TEILLISTE

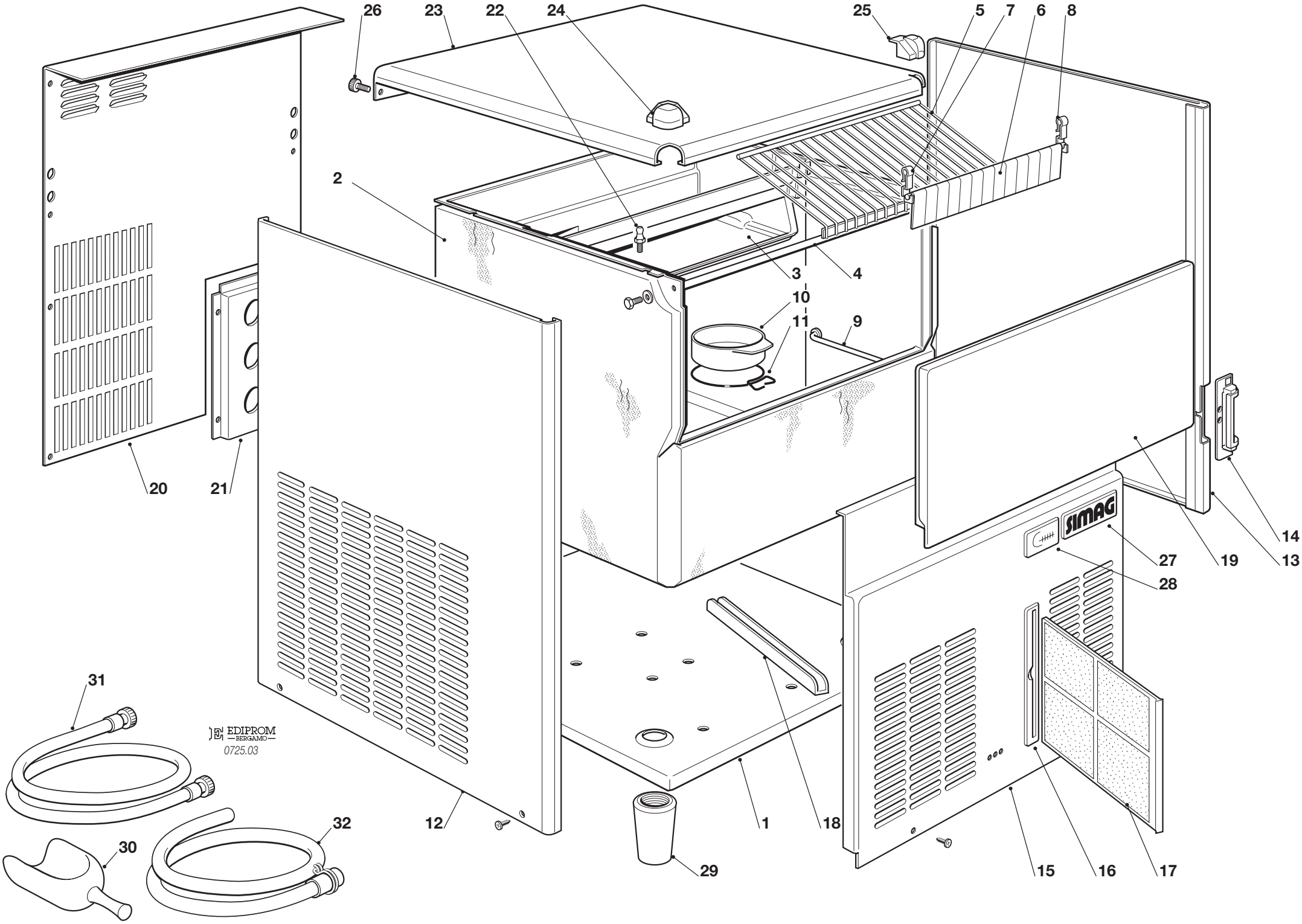
26
23
22
24
25
5
7
6
8
2
3
4
10
11
9
20
21
14
19
13
27
28
SIMAG
31
EDIPROM
BERGAMO
0725.03
32
30
12
1
18
29
15
16
17

SCN 35- SCN 45 -UNIT PANELS - ASSIEME MOBILE - ENS. CARROSSERIE - MACHINE GEHAUSE-

ITEM NO POS NO REP. NO REF. NO	PART NO - CODICE REFERENCE - STUECK NR.	DESCRIPTION	DESCRIZIONE	DESIGNATION	BESCHREIBUNG
1	702510 00	BASE	PIASTRINA DI BASE	PLAQUE DE BASE	GRUNDPLATTE
2	782094 05R 782094 06R	INSULATED BIN ASSY SCN 35 INSULATED BIN ASSY SCN 45	ASSIEME CELLA ISOLATA SCN 35 ASSIEME CELLA ISOLATA SCN 45	ENS. CABINE SCN 35 ENS. CABINE SCN 45	ISOLIEREISSPEICHER SCN 35 ISOLIEREISSPEICHER SCN 45
3	660635 04	EVAPORAT. HOUSING	INVOLUCRO EVAPORAT.	CHAMBRE INTERIEUR	CELLE INTERN
4	732016 08	BIN DOOR BRACKET	ASTA PORTELLO	TIGE PORTE	KLAPPENACHSE
5	650714 02	ICE DEFLECTOR	GRIGLIA SCORRIMENTO CUBETTI	GRILLE GLISSEMENT GLAÇON	ABGLEITGRILL
6	783172 00R	CURTAIN ASSY	ASSIEME TENDINA	ENS. LAMELLE	ABDECKKLAPPE GESAMTHEIT
7	660388 00	LEFT CURTAIN SUPPORT	SUPP. TENDINA SINISTRO	SUPP. LAMELLE GAUCHE	LINKE ABDECKLAPPE HALTERUNG
8	660388 01	RIGHT CURTAIN SUPPORT	SUPP. TENDINA DESTRO	SUPP. LAMELLE DROITE	RECHTE ABDECKLAPPE HALTER.
9	732017 02	BULB HOLDER	TUBO PORTABULBO	TUBE PORTEBULBE	FUEHLERHALTER
10	660741 00	PLASTIC PLUG	TAPPO INVOLUCRO EVAPORAT.	BOUCHON EN PLASTIQUE	PLASTIKSTOPFEN
11	460047 01	SPRING	MOLLA	RESSORT	FEDER
12	722307 00 722311 00	LEFT PANEL SCN 35 LEFT PANEL SCN 45	PAN.LO LAT. SX SCN 35 PAN.LO LAT. SX SCN 45	JOUE GAUCHE SCN 35 JOUE GAUCHE SCN 45	LINKE ABDECKL. HALTER. SCN 35 LINKE ABDECKL. HALTER. SCN 45
13	722306 00 722310 00	RIGHT PANEL SCN 35 RIGHT PANEL SCN 45	PAN.LO LAT. DX SCN 35 PAN.LO LAT. DX SCN 45	JOUE DROITE SCN 35 JOUE DROITE SCN 45	RECHTEGEHÄUS. EDELST. SCN 35 RECHTEGEHÄUS. EDELST. SCN 45
14	660883 00	FRONT SWITCH PLASTIC PROT	CARTER PROTEZIONE INTERRUT	CARTER PROTECTION INTERRUPT	SCHALTERABDECKUNG
15	722309 00 722309 01 722312 00 722312 01	FRONT PANEL AIR SCN 35 FRONT PANEL WATER SCN 35 FRONT PANEL AIR SCN 45 FRONT PANEL WATER SCDN 45	PAN.LO ANT. ARI A SCN 35 PAN.LO ANT. ACQUA SCN 35 PAN.LO ANT. ARI A SCN 45 PAN.LO ANT. ACQUA SCN 35	PAN.AU AVANT . AIR SCN 35 PAN.AU AVANT . EAU SCN 35 PAN.AU AVANT . AIR SCN 45 PAN.AU AVANT . EAU SCN 45	VOR.WAND ED.T. LUFT SCN 35 VOR.WAND ED.T. WASS. SCN 35 VOR.WAND ED.T. LUFT SCN 45 VOR.WAND ED.T. WASS. SCN 45
16	660889 00 660889 01	AIR FILTER SEAT SCN 35 AIR FILTER SEAT SCN 45	SEDE FILTRO ARIA SCN 35 SEDE FILTRO ARIA SCN 45	SIEGE FILTRE A AIR SCN 35 SIEGE FILTRE A AIR SCN 45	LUFTFILTERHALTER SDN 35 LUFTFILTERHALTER SDN 45
17	660888 00 660888 01	AIR FILTER SCN 35 AIR FILTER SCN 45	FILTRO ARIA SCN 35 FILTRO ARIA SCN 45	FILTRE A AIR SCN 35 FILTRE A AIR SCN 45	LUFT FILTIER SCN 35 LUFT FILTIER SCN 45
18	660887 00	SLIDE, AIR FILTER	GUIDA FILTRO ARIA	GLISSIERE FILTRE A AIR	FUHRUNF FUR LUFTFILTIER
19	782092 06R	BIN DOOR	SPORTELLO	PORTE CABINE	SPEICHERTUER
20	702324 00 702325 00	REAR PANEL SCN 35 REAR PANEL SCN 45	PANNELLO POSTERIORE SCN 35 PANNELLO POSTERIORE SCN 45	PANNEAU POSTERIEUR SCN 35 PANNEAU POSTERIEUR SCN 45	HINTERE ABDECKUNG SCN 35 HINTERE ABDECKUNG SCN 45
21	702301 00	METAL BRACKET FOR FITTING	SUPPORTO ATTACCHI	SUPPORT DE RACCORDS	METALLTRÄGER
22	650790 00	STUD	PERNO	AXE	STIFT
23	722308 00	TOP PANEL	PANNELLO SUPER. INOX	ENS. COUVERCLE	DECKEL GESAMTHEIT
24	660884 03	LEFT TOP CAP	TAPPO IN PLASTICA SINISTRO	CAPUCHON EN PLAST. GAUCHE	PLASTIK PROFEN LINK
25	660884 02	RIGHT TOP CAP	TAPPO IN PLASTICA DESTRO	CAPUCHON EN PLAST. DROITE	PLASTIK PROFEN RECHT
26	650806 00	REAR STUD	PERNO POSTERIORE	AXE ARRIÉRE	TRÄGEN - HINTEN
27	650976 00	SIMAG LOGO	TARGHETTA SIMAG	EMBLEME SIMAG	SIMAG ABGEBILDET
28	650976 19 650976 20	SCN 35 LABEL SCN 45 LABEL	TARGHETTA SCN 35 TARGHETTA SCN 45	EMBLEME SCN 35 EMBLEME SCN 45	SCN 35 ABGEBILDET SCN 45 ABGEBILDET
29	650382 02	LEG	PIEDE REGOLABILE	PIED RÉGLABE	GERÄTEFUSS
30	650071 00	ICE SCOOP	SESSOLA	SASSE	EISSCHAUFEL
31	060513 00	KIT WATER SUPPLY PIPE	KIT TUBO ALIM. ACQUA	KIT TUYAU D'ALIM. EAU	WASSER ANSCHLUSSCHLAUCH
32	060513 01	KIT WATER DRAIN PIPE	KIT TUBO SCARICO ACQUA	KIT TUYAU VIDANGE EAU	WASSER SLAUFSCHLAUCH

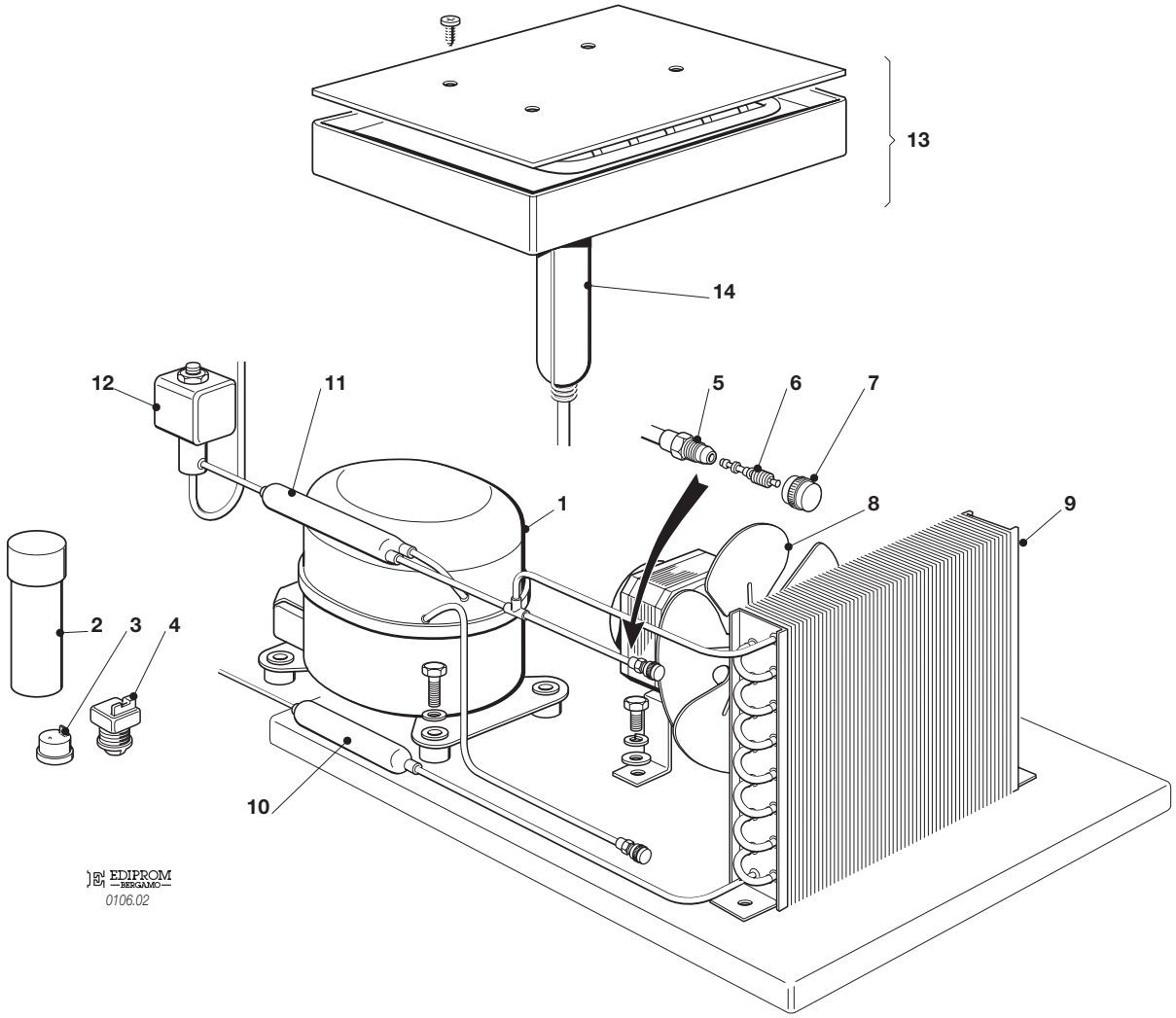
13
14
12
11
5
6
7
1
8
9
2
3
4
10
EDIPROM
BERGAMO
0106.02

SCN 35 - SCN 45 - REFRIGERANT SYSTEM AIR COOLED - SISTEMA REFRIGERANTE RAFFR. AD ARIA
CIRCUIT FRIGORIFIQUE REFROID. PAR AIR - LUFTGEKÜHLT GEFRIERSYSTEM

ITEM NO POS NO REP. NO REF. NO	PART NO - CODICE REFERENCE - STUECK NR.		DESCRIPTION	DESCRIZIONE	DESIGNATION	BESCHREIBUNG
	SCN 35	**SCN 45**				
1	670100 00	670100 01	COMPRESSOR	COMPRESSORE	COMPRESSEUR	KOMPRESSOR
2	620167 29	620167 29	START CAPACITOR	CONDENSATORE D'AVVIAMENTO	CAPACITE DE DEMARRAGE	START CONDENSATOR
3	620478 03	620058 67	PROTECTOR	PROTETTORE	PROTECTEUR	SCHUTZGERAT
4	620057 31	620057 56	RELAY	RELÈ	RELAIS	RELAIS
5	650109 00		VALVE BODY	CORPO VALVOLA	CORPS DE VANNE	VENTILGEHAUSE
6	670012 00		VALVE PISTON	PISTONCINO VALVOLA	PISTON	VENTILKOLBEN
7	650106 00		VALVE CAP	CAPPUCCIO VALVOLA	CAPUCHON DE VANNE	VENTILKLAPPE
8	620419 02 620419 32	620419 33	FAN MOTOR FAN BLADE	MOTOVENTILATORE VENTOLA	MOTO-VENTILATEUR HELICE	LÜFTERMOTOR FLÜGEL
9	620420 00	620439 00	AIR COOLED CONDENSER	CONDENSATORE AD ARIA	CONDENSEUR	KONDENSATOR
10	630003 05		DRIER	FILTRO DEUMIDIFICATORE	FILTRE DESHYDRATEUR	TROCKNER
11	630137 00	630137 01	MECHANICAL FILTER	FILTRO MECCANICO	FILTRE MECANIQUE	MECHANISCHFILTERN
12	620306 48 620306 27		HOT GAS VALVE COIL HOT GAS VALVE BODY	BOBINA VALVOLA GAS CALDO CORPO VALVOLA GAS CALDO	BOBINE VANNE GAZ CHAUDS CORP VANNE GAZ CHAUDS	HEISSGAZ VENTIL SPULE VENTILGEHAUSE
13	784491 00	784491 00	EVAPORATOR ASSY	ASSIEME EVAPORATORE	ENS. EVAPORATEUR	VERDAMPFER
14	784444 03	784444 15	ACCUMULATOR ASSY	ASSIEME ACCUMULATORE	ENS. ACCUMULATEUR	SAMMLER UND SAUGLEITUNGEN
*	620499 00	620499 00	PRESSURE CONTROL	PRESSOSTATO	PRESSOSTAT	PRESSOSTAT

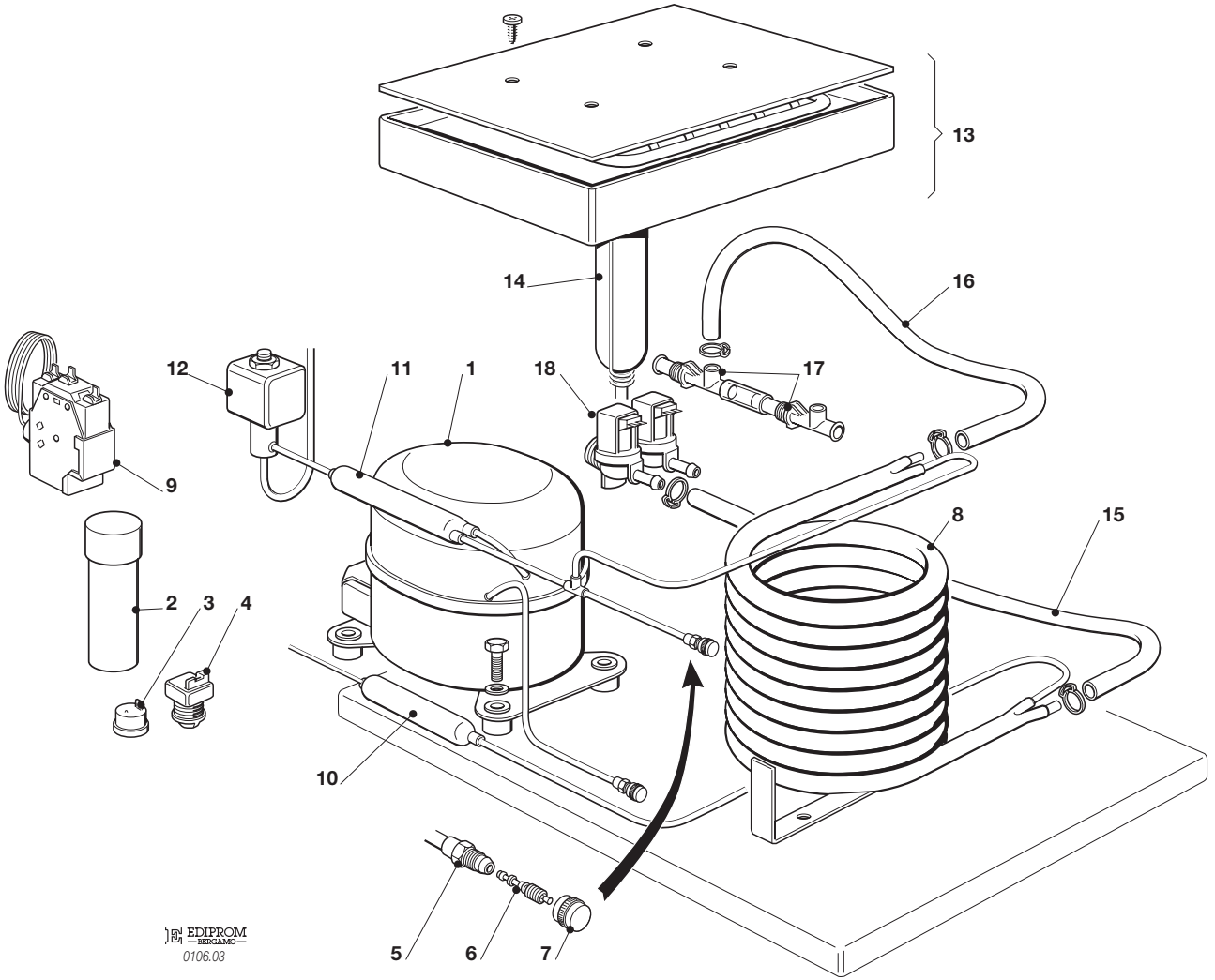
13
14
16
12
11
1
18
17
9
8
15
2
3
4
10
5
6
7
EDIPROM
BERGAMO
0106.03

SCN 35 - SCN 45 - REFRIGERANT SYSTEM WATER COOLED - SISTEMA REFRIGERANTE RAFFR. AD ACQUA
CIRCUIT FRIGORIFIQUE REFROID. PAR EAU - WASSERGEKOHL T GEFRIERSYSTEM

ITEM NO / POS NO / REP. NO / REF. NO	PART NO - CODICE / REFERENCE - STUECK NR. SCN 35	SCN 45	DESCRIPTION	DESCRIZIONE	DESIGNATION	BESCHREIBUNG
1	670100 00	67010001	COMPRESSOR	COMPRESSORE	COMPRESSEUR	KOMPRESSOR
2	620167 29	620167 29	START CAPACITOR	CONDENSATORE D'AWIAMENTO	CAPACITE DE DEMARRAGE	START CONDENSATOR
3	620478 03	620058 67	PROTECTOR	PROTETTORE	PROTECTEUR	SCHUTZGERAT
4	620057 31	620057 56	RELAY	RELÈ	RELAIS	RELAIS
5	650109 00		VALVE BODY	CORPO VALVOLA	CORPS DE VANNE	VENTILGEHAUSE
6	670012 00		VALVE PISTON	PISTONCINO VALVOLA	PISTON	VENTILKOLBEN
7	650106 00		VALVE CAP	CAPPUCCIO VALVOLA	CAPUCHON DE VANNE	VENTILKLAPPE
8	620389 00		WATER COOLED CONDENSER	CONDENSATORE ACQUA	CONDENSEUR A EAU	WASSER KONDENSATOR
9	620499 01		PRESSURE CONTROL	PRESSOSTATO	PRESSOSTAT	PRESSOSTAT
10	630003 05		DRIER	FILTRO DEUMIDIFICATORE	FILTRE DESHYDRATEUR	TROCKNER
11	630137 00	63013701	MECHANICAL FILTER	FILTRO MECCANICO	FIL TRE MECANIQUE	MECHANISCHFIL TERN
12	620306 48 620306 27		HOT GAS VALVE COI L HOT GAS VALVE BODY	BOBINA VALVOLA GAS CALDO CORPO VALVOLA GAS CALDO	BOBINE VANNE GAZ CHAUDS CORP VANNE GAZ CHAUDS	HEISSGAZ VENTI L SPULE VENTILGEHAUSE
13	784480 00	784480 01	EVAPORATOR ASSY	ASSIEME EVAPORATORE	ENS. EVAPORATEUR	VERDAMPFER
14	784444 03	784444 15	ACCUMULATOR ASSY	ASSIEME ACCUMULATORE	ENS. ACCUMULATEUR	SAMMLER UND SAUGLEITUNGEN
15	281900 01		PLASTIC TUBE - PER METER	TUBO PVC - PER METRO	TUYAU EN PLASTIQUE - POUR MT.	PLASTIK ROHR - PRO METER
16	281900 01		PLASTIC TUBE - PER METER	TUBO PVC - PER METRO	TUYAU EN PLASTIQUE - POUR MT.	PLASTIK ROHR - PRO METER
17	660993 00		WATER DRAIN FITTING	RACCORDO SCARICO ACQUA	RACCORD EVACUATION EAU	WASSERABFLUSSANSCHLUSSE
18	650105 70		WATER INLET VALVE	ELETTROV AL VOLA DOPPIA	VANNE ARRIVÈE EAU	ELEKTROVENTIL

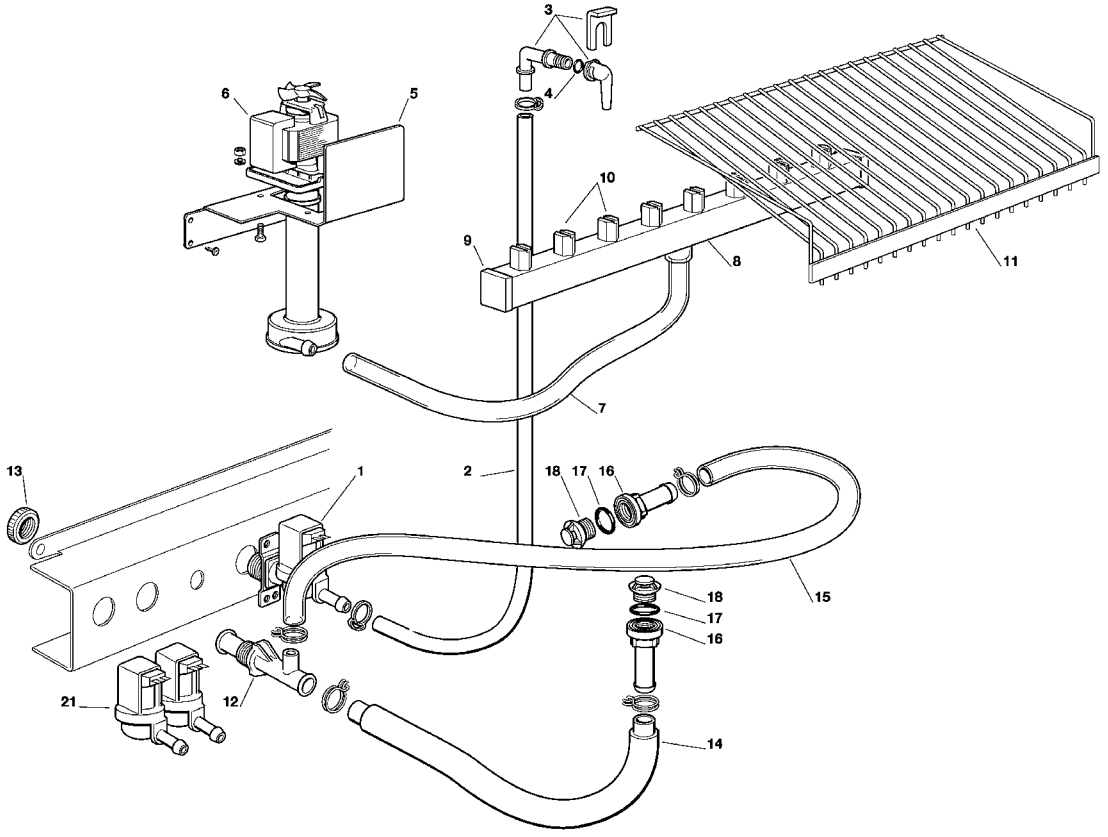
3
4
6
5
10
9
8
11
7
13
1
2
18
17
16
15
18
17
16
21
12
14

SCN 35- SCN 45 - WATER SYSTEM - CIRCUITO IDRAULICO - CIRCUIT HYDRAULIQUE – WASSERSYSTEM -

ITEM NO POS NO REP. NO REF. NO	PART NO CODICE REFERENCE STUECK NR	DESCRIPTION	DESCRIZIONE	DESIGNATION	BESCHREIBUNG
1	650105 66	WATER INLET VALVE - AIR COOLED	ELETTROVALVOLAINGR.ACQUA	ELECTROVANNE ARR. EAU - REFR. AIR	WASSEREINLAUFVENTIL - LUFT
2	281900 01	PLASTIC TUBE - PER METER	TUBO INGRESSO ACQUA	TUYAU EN PLASTIQUE - POUR MT.	PLASTIK ROHR - PRO METER
3	793172 00R	WATER INLET ELBOW ASSY	ASS. INGR. ACQUA A GOMITO	ENS. ENTREE EAU COUDEE	ABGENKELZULAUFROHR
4	640041 31	O-RING	GUARNIZIONE	JOINT TORIQUE	SIMMER RING
5	724333 00	METAL BRACKET	SUPPORTO POMPA	SUPPORT METALLIQUE	METAL TRAEGER
6	620433 00	WATER PUMP	POMPA	POMPE A EAU	WASSER PUMPE
7	610150 03	PUMP INLET WATER PIPE	TUBO MANDATA POMPA	TUYAU EVACUATION	ABFLUSSROHR
8	650665 28	SPRAY BAR	TUBO SPRUZZATORE	COLLECTEUR	KOLLEKTOR
9	660557 00	PLUG	UGELLO SPRUZZATORE	BOUCHON POUR COLLECTEUR	STOPFEN
10	660558 00	SPRAY JET	SPRUZZATORI	GICLEURS	SPROHDOSEN
11	650714 02	ICE DEFLECTOR	GRIGLIA SCORRIMENTO CUBETTI	GRILLE GLiSSEMENT GLAçON	ABGLEITGRILL
12	640134 00	WATER DRAIN FITTING	RACCORDO A "T"	RACCORD EVACUATION EAU	WASSERABFLUSSANSCHLUSSE
13	660211 01	PLASTIC RING NUT	GHIERA	COLLIER DE SERRAGE EN PLAST.	PLASTIKRING MUTTER
14	610148 20	sTORAGE BIN DRAIN	TUBO SCARICO CONTENITORE	TUYAU VIDANGE CONTENEUR	BEHALTERAUSLAUFSCHLAUCH
15	610204 00	OVERFLOW DRAIN TUBE	TUBO SCARICO TROPPO PIENO	TUYAU VIDANGE TROP PLAIN	BEHAL TER ABLAUF
16	660219 01	BIN DRAIN	RACCORDO DI SCARICO	RACCORD EVACUATION	ABFLUSSROHR
17	660224 00	O-RING	GUARNIZIONE	JOINT TORIQUE	SIMMER RING
18	660211 01	DRAIN FIL TER	FILTRO SCARICO	FILTRE EVACUATION EAU	ABFLUSSFIL TER
21	650105 70	WATER INL. VAL. - WATER COOLED	ELETTROVALVOLA INGR. ACQUA	ELECTROV. ARR. EAU c REFR. EAU	WASSEREINLAUFVENTIL - WASSER

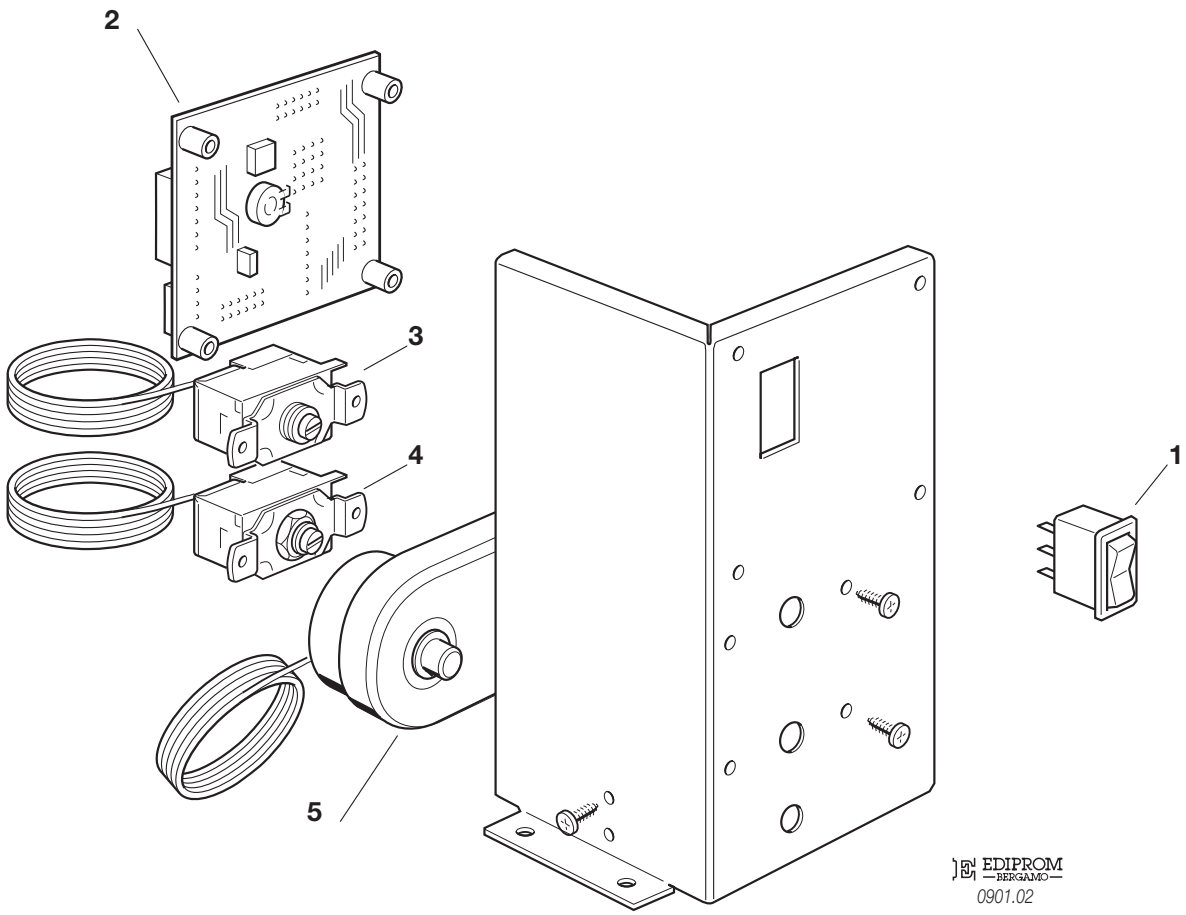

EDIPROM
BERGAMO
0901.02

SCN 35-45 - CONTROL BOX - SCATOLA DI CONTROLLO - BOITE ELECTRIQUE - SCHALTSCHRANK -

ITEM NO POS. NO REP. NO REF. NO	PART NO CODICE REFERENCE STUECK NR	DESCRIPTION	DESCRIZIONE	DESIGNATION	BESCHREIBUNG
1	620453 00	SWITCH	INTERRUTTORE LUMINOSO	INTERRUPTEUR LUMINEUX	SCHALTER
2	620507 00	ELECTRONIC TIMER	TIMER ELETTRONICO	MINUTERIE ELECTRONIQUE	ELEKTRONISCHER TIMER
	620507 00	TIMER	TIMER	MINUTERIE	TIMER
3	630005 00	BIN THERMOSTAT	TERMOSTATO CONTENITORE	THERMOSTAT CONTENEUR	BEHÄLTER THERMOSTAT
4	620201 01	EVAPORATOR THERMOSTAT	TERMOSTATO EVAPORATORE	THERMOSTAT EVAPORATEUR	VERDAMPFERTHERMOSTAT
5	620443 02	THERMOSTAT - SAFETY	TERMOSTATO DI SICUREZZA	THERMOSTAT DE SECURITÉ	SICHERHEITS THERMOSTAT

SCN 35 - SCN 45 - COMPRESSOR CHART - TABELLA COMPRESSORI - TABLEAU COMPRESSEUR - KOMPRESSOR KARTE

MODEL MODELLO MODELE MODELL	VOLTS TENSIONE TENSION SPANNUNG	COMPRESSOR MODEL MOD. COMPRESSORE TYPE COMPRESSEUR KOMPRESSOR TYP	COMPRESSOR COMPRESSORE COMPRESSEUR KOMPRESSOR	RELAY RELE' RELAIS RELAIS	PROTECTOR PROTETTORE PROTECTEUR SCHUTZGERAT	START CAPACITOR CAPACITA D'AVV. CAPACITE DE DEMARRAGE START KONDENSATOR
SCN 35 SCN 45	115/60/1					
SCN 35 SCN 45	230/60/1 230/60/1	GL 90 TG GP 14 TG	670100 07 670100 08	620057 37 620057 67	620478 00 620058 98	620167 29 620167 29
SCN 35 SCN 45	230/50/1 230/50/1	GL 90 TB GP 14 TB	670100 00 670100 01	620057 31 620057 56	620478 03 620058 67	620167 29 620167 29

SCN 35 - SCN 45 - ELECTRIC COMPONENTS CHART - TABELLA COMPONENTI ELETTRICI TABLEAU COMPOSANTS ELECTRIQUE - ELEKTRISCHEKARTE

MODEL MODELLO MODELE MODELL	VOLTS TENSIONE TENSION SPANNUNG	WATER PUMP POMPA POMPE A EAU WASSER PUMPE	FAN MOTOR ONLY MOTORE VENTILATORE MOTEUR VENTILATEUR LUFTER MOTOR	WATER INLET VALVE VALV. INGR. ACQUA V.E.M. ARRIVEE EAU WASSEREIN. VENTIL	HOT GAS VALVE COIL BOBINA VALVOLA GAS CALDO BOBINE V.E.M. GAZ CHAUDS HEISSGAZ VENTIL SPULE	TIMER TIMER MINUTERIE TIMER
SCN 35-45	115/60/1					
SCN 35-45	230/60/1	620433 01	620419 02	650105 66 / 650105 70 (AIR / WATER)	620306 48	620441 00
SCN 35-45	230/50/1	620433 00	620419 02	650105 66 / 650105 70 (AIR / WATER)	620306 48	620441 00



Via Pascoli, 22 - 20010 Pogliano Milanese (Milano) Italy
Tel. +39 02 93900215 (Commerciale - Sales Dept.)
Tel. +39 02 93960357 (Assistenza - Service Dept.)
Fax +39 02 93900226 (Commerciale - Sales Dept.)
Fax +39 02 93960366 (Assistenza - Service Dept.)
E-mail: sales@simag.it • service@simag.it
www.simag.it