Mod./Type:	**_70/... CPGS - _90/... CPGS**	cod./num.	2531717.00
	SIMPLE	data/date:	28/08/2014

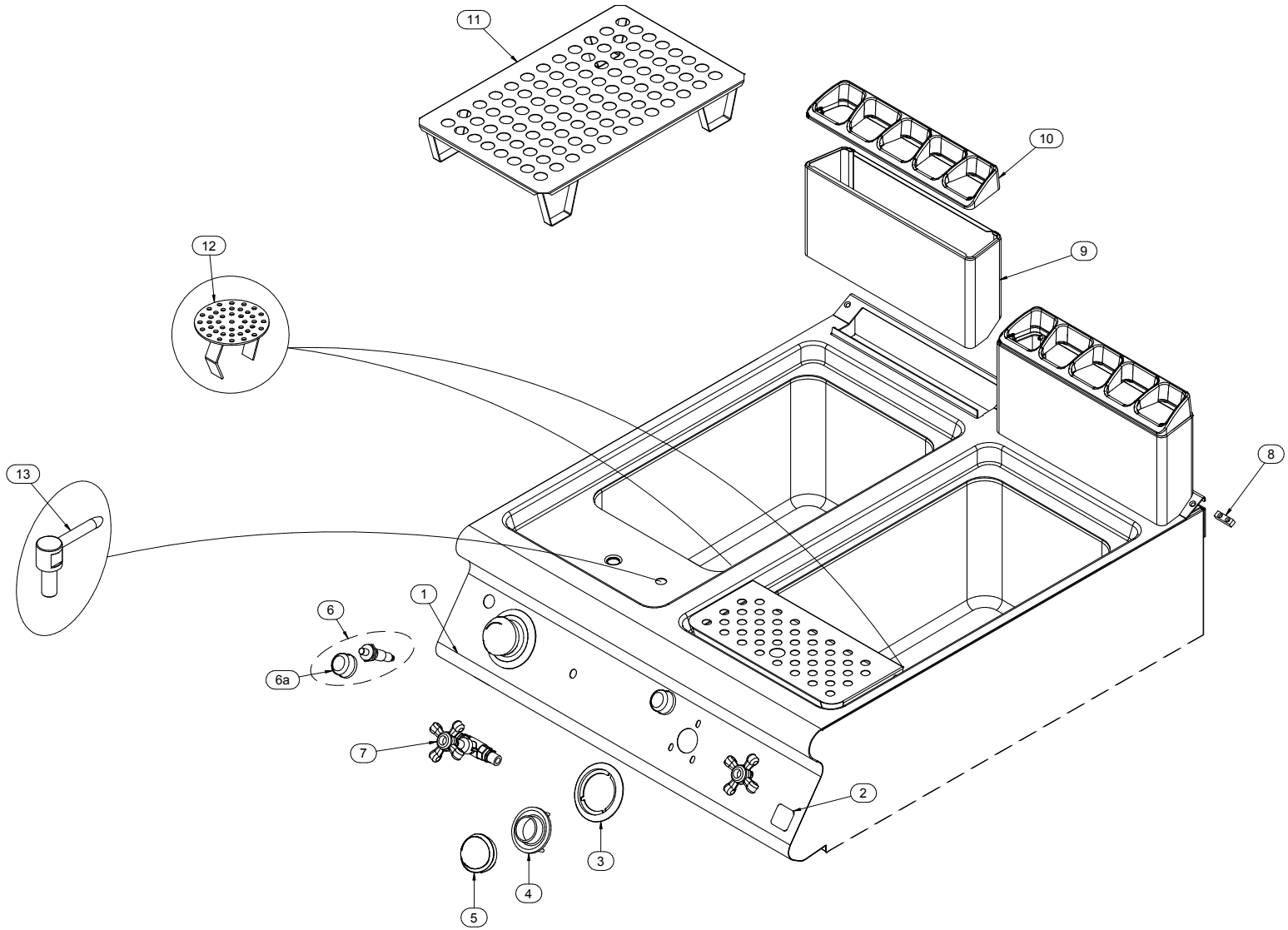

Mod./Type: **_70/... CPGS - _90/... CPGS**

SIMPLE

cod./num. 2531719.00

data/date: 26/06/2014

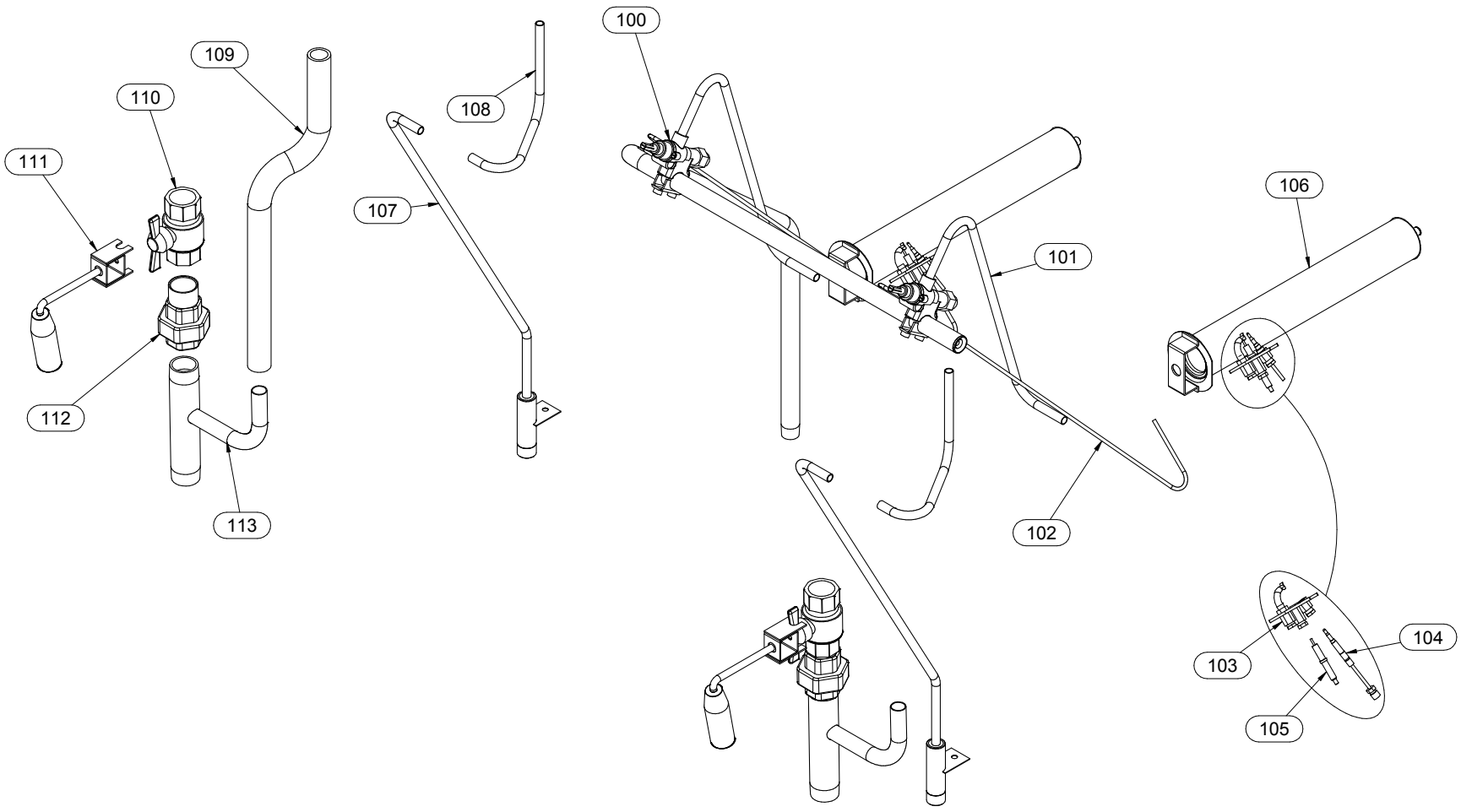

Mod./Type: **_70 - _90 .../40 ... - .../80 ... - .../120 ...**

VANO / CABINET - ...B - ...BE - ...BH2

cod./num. 2531578.00

data/date: 05/06/2014

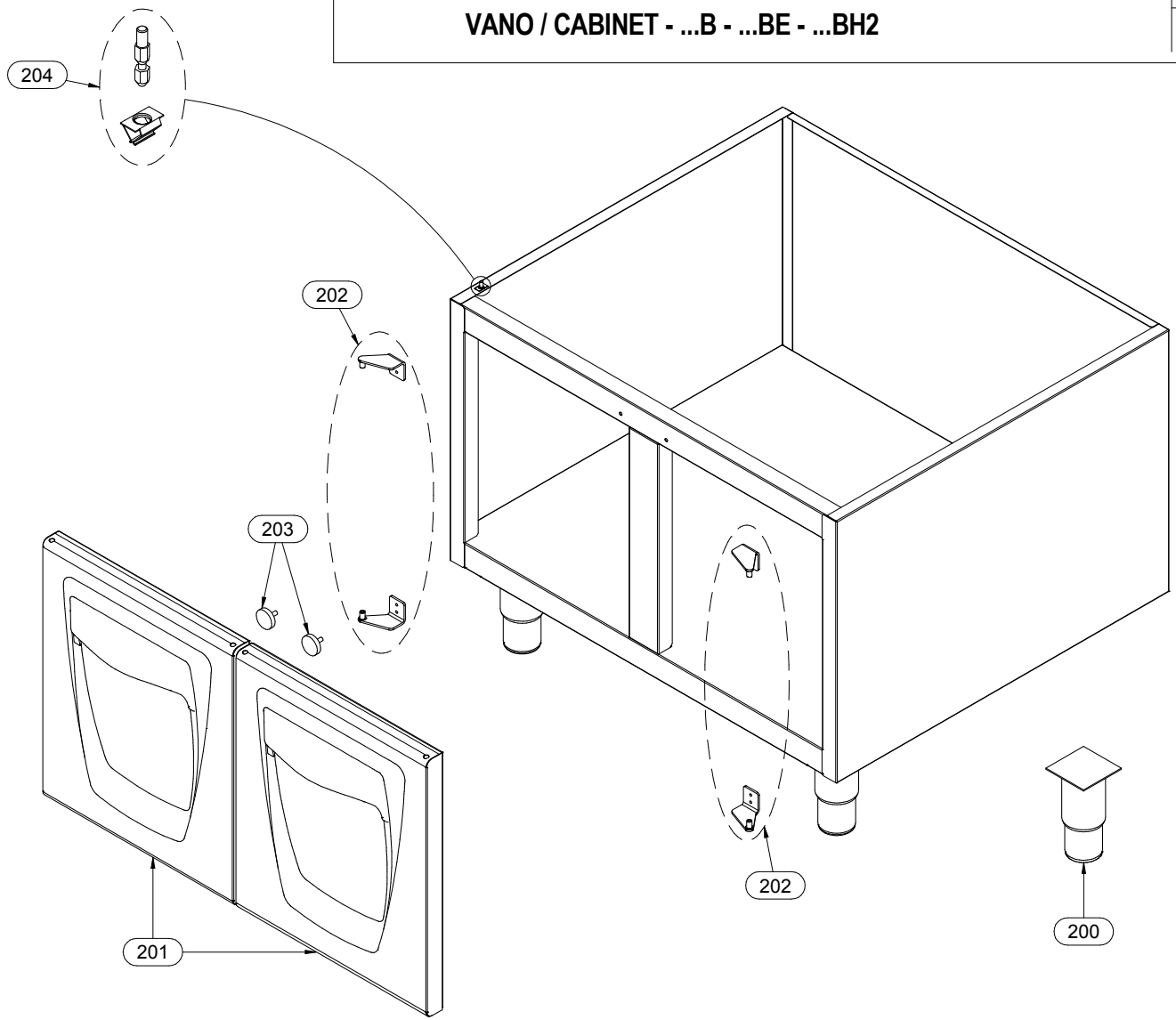

Mod.:	_70/… CPGS _90/... CPGS			cod. / num. 2531718.00 data / date 28/08/2014 rif. / ref. 2531717.00		RICAMBI CONSIGLIATI - RECOMMENDED SPARE PARTS - PIÈCES DÉTACHÉES RECOMMANDÉES - EMPFOHLENEN ERSATZTEILE	EM70/40 CPGS	EM70/80 CPGS	EM90/40 CPGS	EM90/80 CPGS	NOTE	
POS.	DESCRIZIONE	DESCRIPTION	DENOMINATION	BENENNUNG	COD.		Q. ty					
1	CRUSCOTTO	CONTROL PANEL	BANDEAU	BEDIENBLENDE	9111289.00		1		1			
					9111290.00			1		1		
2	MARCHIO	BRAND NAME	MARQUE	MARKENZEICHEN	982.021.00		1	1	1	1	FROM: 15.12.2011	TO: 31.01.2014
					982.023.00		1	1	1	1	FROM: 01.02.2014	TO:...
3	SERIGRAFIA	SCREEN PRINT	SÉRIGRAPHIE	SIEBDRUCK	910.163.00		1	2	1	2		
4	LABIRINTO	LABYRINTH	LABYRINTHE	LABYRINTH	256.235.00		1	2	1	2		
5	MANOPOLA	KNOB	BOUTON	DREHKNOPF	256.217.00	*	1	2	1	2		
6	ACCENDITORE PIEZO	PIEZO LIGHTER	ALLUMEUR PIEZO	PIEZOZÜNDER	912.091.00		1	2	1	2		
6a	CAPPUCCIO	CAP	CAPUCHON	KAPPE	951.047.00		1	2	1	2		
7	RUBINETTO	TAP	ROBINET	WASSERHAHN	678.065.25		1	2	1	2		
8	PIASTRINA GIUNZIONE	FIXING PLATE	PLAQUETTE FIXAGE	BEFESTIGUNGSPLATTE	941.130.00		1	1	1	1		
9	CAMINO	CHIMNEY	CHEMINÉE	KAMIN	256.309.00		1	2	1	2		
10	GRIGLIA CAMINO	FLUE GRIDDLE	GRILLE POUR CHEMINÉE	KAMINROST	982.014.00		1	2	1	2		
11	FALSOFONDO	FALSE BOTTOM	FAUX-FOND	ABTROPFPLATTE	6111186.00		1	2			FROM: 15.12.2011	TO: 21.10.2013
					6111186.15		1	2			FROM: 22.10.2013	TO:...
					911.758.15				1	2		
12	FILTRO SCARICO	EXHAUST FILTER	FILTRE D'ECHAPPEMENT	ABLAUFFILTER	611.266.00		1	2	1	2		
13	EROGATORE	DISTRIBUTOR	AJUTAGE	SPRÜHDOSE	256.313.00		1	2	1	2		
14												
15												
16												
17												
18												
19												
20												
21												
22												
23												
24												
25												
26												
27												
28												
29												
30												
31												
32												
33												
34												

Mod.:	_70/... CPGS - _90/... CPGS SIMPLE			cod. / num. 2531720.00 data / date 25/06/2014 rif. / ref. 2531719.00		_70/40 CPGS	_70/80 CPGS	_90/40 CPGS	_90/80 CPGS	NOTE	
POS.	DESCRIZIONE	DESCRIPTION	DENOMINATION	BENENNUNG	COD.	Q. ty					
100	RUBINETTO GAS	GAS TAP	ROBINET GAZ	GASHAHN	671.088.00	1	2	1	2		
101	TUBO GAS	GAS PIPE	TUBE GAZ	GASROHR	256.314.00	1	2	1	2		
102	TUBO GAS	GAS PIPE	TUBE GAZ	GASROHR	256.315.00	1	2	1	2		
103	GRUPPO PILOTA	PILOT GROUP	GROUPE VEILLEUSE	ZÜNDBRENNER GRUPPE	256.059.00	1	2	1	2		
104	TERMOCOPPIA	THERMOCOUPLE	THERMOCOUPLE	THERMOELEMENT	672.001.00	1	2				
					672.083.00			1	2		
105	CANDELA ACCENSIONE	IGNITION ELECTRODE	BOUGIE D'ALLUMAGE	KERZE SCHNELLBRENNER	256.060.00	1	2	1	2		
106	BRUCIATORE	BURNER	BRULEUR	BRENNER	672.145.00	1	2				
					672.072.15			1	2		
107	TUBO CARICO	INLET HOSE	TUYAU DE CHARGEMENT	BELASTUNG-ROHR	256.312.00	1	2	1	2		
108	TUBO EROGATORE	REGULATOR PIPE	TUYEAU REGULATOR	WASSERLAST	256.311.00	1	2	1	2		
109	SCARICO TROPPOPIENO	OVERFLOW WATER OUTLET	VIDANGE DU TROP-PLEIN	ABLAUF DES ÜBERLAUFS	0831.2026.00	0,8	1,5	0,8	1,5	U. M. metri	U. M. meters
110	VALVOLA	VALVE	SOUPAPE	VENTIL	678.014.00	1	2	1	2		
111	MANIGLIA	HANDLE	POIGNÉE	HANDGRIFF	256.310.00	1	2	1	2		
112	RACCORDO	CONNECTOR	RACCORD	ANSCHLUSS	0716.10080.0	1	2	1	2		
113	TUBO SCARICO	EXHAUST PIPE	TUYAU D'ÉCHAPPEMENT	ABLAUFROHR	611.264.00	1	2	1	2		
114											
115											
116											
117											
118											
119											
120											
121											
122											
123											
124											
125											
126											
127											
128											
129											
130											
131											
132											
133											
134											
135											

Mod.:	_70/... - _90/… VANO / CABINET …B - …BE - …BH2			cod. / num. 2531579.00 data / date 05/06/2014 rif. / ref. 2531578.00		RICAMBI CONSIGLIATI - RECOMMENDED SPARE PARTS - PIÈCES DÉTACHÉES RECOMMANDÉES - EMPFOHLENEN ERSATZTEILE	EM70/40 ...	EM70/80 ...	EM70/120 ...	EM90/40 ...	EM90/80 ...	EM90/120 ...	NOTE	
POS.	DESCRIZIONE	DESCRIPTION	DENOMINATION	BENENNUNG	COD.		Q. ty							
200	PIEDINO	FOOT	PIED	STELLFUSS	912.090.00		4	4	4	4	4	4	FROM: 15.12.2011	TO: 17.05.2013
					912.090.14		4	4	4	4	4	4	FROM: 18.05.2013	TO:...
201	PORTA	DOOR	PORTE	TÜR	256.215.00		1	2	3	1	2	3		
202	COPPIA CERNIERE	GASKETS PAIR	COUPLE CHARNIÈRES	SCHARNIERPAAR	256.216.00		1	2	3	1	2	3		
203	MAGNETE	MAGNET	MAGNÉTO	MAGNET	684.007.00		1	2	3	1	2	3	FROM: 15.12.2011	TO: 01.01.2014
					984.006.00		1	2	3	1	2	3	FROM: 02.01.2014	TO:...
204	FISSAGGIO	FIXING	FIXAGE	BEFESTIGUNG	256.431.00		4	4	4	4	4	4	FROM: 04.05.2015	TO:...
205														
206														
207														
208														
209														
210														
211														
212														
213														
214														
215														
216														
217														
218														
219														
220														
221														
222														
223														
224														
225														
226														
227														
228														
229														
230														
231														
232														
233														
234														