FAGOR

FAGOR INDUSTRIAL

# DESPIECE TÉCNICO
# TECHNICAL PARTS

Lavavajillas

Dishwasher

**MODELS**
CO-502W

**Febrero 2015 February**
Revisado Febrero 2015 February Revised



Together we evolve

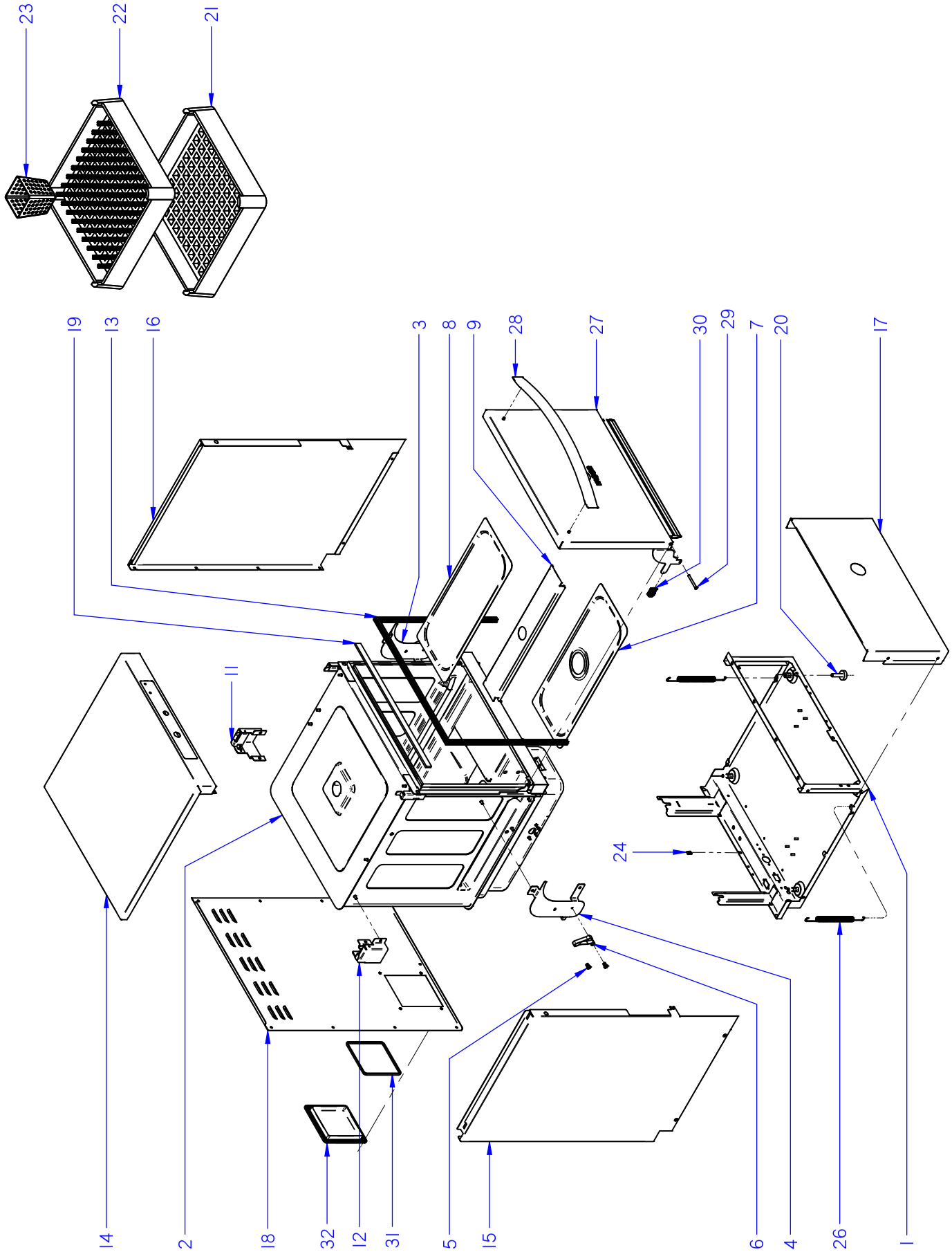


ITEM MARCADO EN COLOR = REPUESTO RECOMENDADO
COLOURED ITEM = RECOMMENDED SPARE PART

| N plano / Drawing N. | Firma / Signature | Fecha / Date | Aparato / Appliance | Lamina / Sheet | |
|---|---|---|---|---|---|
| C-3380 | Iban R. | 2015-02 | ARMAZON / FRAME<br>LAVAVAJILLAS CO-502W DISHWASHER | 1 | Fagor Industrial S.Coop. FAGOR<br>Onate |

| ZONA / ZONE | ARMAZON / FRAME | LÁMINA / DRAWING | C-3380 | FAGOR |
|---|---|---|---|---|

| ITEM | REFERENCIA REFERENCE | DENOMINACIÓN | DENOMINATION | CO-502W | | | | | | | RECOMMENDED | ELIMINADO ELIMINATED | INTRODUCIDO INTRODUCED | NOTAS / NOTES |
|---|---|---|---|---|---|---|---|---|---|---|---|---|---|---|
| 1 | 12097740 | CONJUNTO_BASE_ARMAZON_AF | BASE FRAME COMPLETE | 1 | | | | | | | | | | |
| 2 | 12049291 | CAJA SOLDADA CONCEPT | WELDED TUB CONCEPT | 1 | | | | | | | | | | |
| 3 | 12043455 | SOPORTE RESORTE PUERTA DCHA | DOOR SPRING RIGHT SUPPORT | 1 | | | | | | | | | | |
| 4 | 12043457 | SOPORTE RESORTE PUERTA IZDA | DOOR SPRING LEFT SUPPORT | 1 | | | | | | | | | | |
| 5 | 12043554 | EJE RESORTE | SPRING SHAFT | 4 | | | | | | | | | | |
| 6 | 12043429 | RESORTE PUERTA | DOOR SPRING | 2 | | | | | | | | | | |
| 7 | 12109967 | BANDEJA FILTRO ALIVIADERO | SPILLWAY FILTER TRAY | 1 | | | | | | | | | | |
| 8 | 12109964 | BANDEJA CONCEPT LISA (DCHA.) | CONCEPT FLAT TRAY (RIGHT) | 1 | | | | | | | | | | |
| 9 | 12098244 | SOPORTE CENTRAL BANDEJAS | CENTRAL TRAYS SUPPORT | 1 | | | | | | | | | | |
| 11 | 12103774 | SUJECIÓN PANEL LATERAL DCHO. | RIGHT SIDE PANEL FASTENING | 1 | | | | | | | | | | |
| 12 | 12103787 | SUJECIÓN PANEL LATERAL IZDO. | LEFT SIDE PANEL FASTENING | 1 | | | | | | | | | | |
| 13 | 12049352 | BURLETE APERTURA FRONTAL | FRONT LOADING GASKET | 1 | | | | | | | | | | |
| 14 | 12113950 | TAPA PORTAMANDOS W | CONTROL PANEL COVER W | 1 | | | | | | | | | | |
| 15 | 12122224 | PANEL LATERAL IZDO | LEFT SIDE PANEL | 1 | | | | | | | | | | |
| 16 | 12122222 | PANEL LATERAL DCHO | RIGHT SIDE PANEL | 1 | | | | | | | | | | |
| 17 | 12114411 | PANEL FRONTAL W | FRONT PANEL W | 1 | | | | | | | | | | |
| 18 | 12120613 | PANEL POSTERIOR ADVANCE | REAR PANEL ADVANCE | 1 | | | | | | | | | | |
| 19 | 12111378 | ESPUMA CIERRE TAPA PORTAMAND. | CTRL. P. COVER CLOSURE FOAM | 1 | | | | | | | | | | |
| 20 | 12024163 | PATA REGULABLE | REGULABLE FEET | 4 | | | | | | | | | | |
| 21 | 12025011 | CESTILLO BASE CT-10 | CT-10 BASE BASKET | 1 | | | | | | | | | | |
| 22 | 12024990 | CESTILLO PLATOS CP-16-18 | CP-16-18 PLATES BASKET | 1 | | | | | | | | | | |
| 23 | 12023745 | CESTILLO CUBIERTOS | CUTLERY BASKET | 4 | | | | | | | | | | |
| 24 | 12087215 | TUERCA RÁPIDA M5 MIKALOR | MIKALOR QUICK NUT M5 | 19 | | | | | | | | | | |
| 26 | 12097279 | MUELLE APERTURA FRONTAL | FRONT LOADING SPRING | 2 | | | | | | | | | | |
| 27 | 12097227 | PUERTA COMPLETA | COMPLETE DOOR | 1 | | | | | | | | | | |
| 28 | 12049466 | ASA PUERTA | DOOR HANDLE | 1 | | | | | | | | | | |
| 29 | 12048418 | TORN_ESPECIAL_EJE_PUERTA_M6 | DOOR AXIS SPECIAL SCREW M-6 | 2 | | | | | | | | | | |
| 30 | 12047927 | TOPE BISAGRA | HINGE DOORSTOP | 2 | | | | | | | | | | |
| 31 | 12096947 | JUNTA TAPA | COVER'S SEAL | 1 | | | | | | | | | | |
| 32 | 12095220 | TAPA PLASTICO CAJA CONEXIONES | CONNECTIONS BOX COVER | 1 | | | | | | | | | | |
| | | | | | | | | | | | | | | |
| | | | | | | | | | | | | | | |

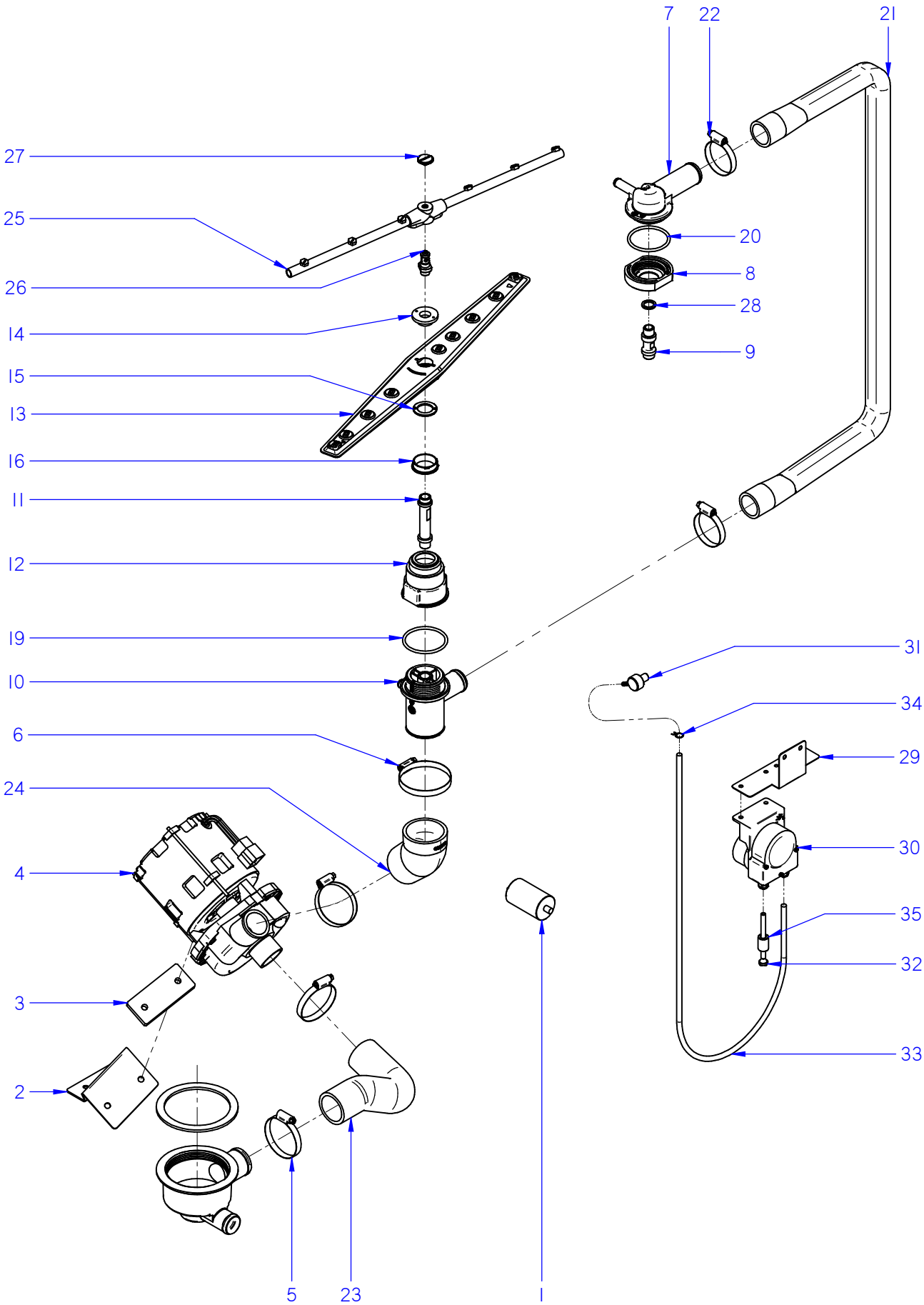


ITEM MARCADO EN COLOR = REPUESTO RECOMENDADO
COLOURED ITEM = RECOMMENDED SPARE PART

| N plano / Drawing N. | Firma / Signature | Fecha / Date | Aparato / Appliance | Lamina / Sheet | |
|---|---|---|---|---|---|
| C-3381 | Iban R. | 02-2015 | PARTE FUNCIONAL LAVADO / WASHING FUNCTIONAL PART<br>LAVAVAJILLAS CO-502W DISHWASHER | 2 | Fagor Industrial S.Coop. FAGOR<br>Onate |

| ZONA / ZONE | PARTE FUNCIONAL LAVADO / WASHING FUNCTIONAL PART | LÁMINA / DRAWING | C-3381 | FAGOR |
|---|---|---|---|---|

| ITEM | REFERENCIA REFERENCE | DENOMINACIÓN | DENOMINATION | CO-502W | | | | | | | RECOMMENDED | ELIMINADO ELIMINATED | INTRODUCIDO INTRODUCED | NOTAS / NOTES |
|---|---|---|---|---|---|---|---|---|---|---|---|---|---|---|
| 1 | 12024376 | CONDENSADOR 10MF | 10MF CAPACITOR | 1 | | | | | | | X | | | |
| 2 | 12043784 | SOPORTE BOMBA LAVADO | WASHIG PUMP SUPPORT | 1 | | | | | | | | | | |
| 3 | 12023556 | BASE BOMBA LAVADO 1003016 | WASHIG PUMP BASE 1003016 | 1 | | | | | | | | | | |
| 4 | 12102834 | MOTOBOMBA 590KW 60Hz | WASHIG PUMP 590KW 60Hz | 1 | | | | | | | X | | | |
| 5 | 12009962 | ABRAZADERA 40-60 | 40-60 CLAMP | 3 | | | | | | | | | | |
| 6 | 12009933 | ABRAZADERA 50-70L | 50-70L CLAMP | 1 | | | | | | | | | | |
| 7 | 12041614 | SOP. DISTRIBUIDOR SUPERIOR | UPPER SPRY-ARM SUPPORT | 1 | | | | | | | | | | |
| 8 | 12041531 | AMARRE SOPORTE DISTR. SUPERIOR | UPPER DISTRIB. SUPPORT FASTENINC | 1 | | | | | | | | | | |
| 9 | 12043289 | EJE LAVADO FRONTAL | WASHING SHAFT FRONT LOADING | 1 | | | | | | | | | | |
| 10 | 12047863 | SOP. DISTRIBUIDOR INFERIOR | LOWER SPRY-ARM SUPPORT | 1 | | | | | | | | | | |
| 11 | 12048535 | EJE LAVADO AF CONCEPT | WASHING SHAFT FRONT LOADING | 1 | | | | | | | | | | |
| 12 | 12048042 | AMARRE SOPORTE DISTR. INFERIOR | LOW. DISTRIB. SUPPORT FASTENING | 1 | | | | | | | | | | |
| 13 | 12025122 | DISTRIBUIDOR MONTADO | COMPLETE DISTRIBUTOR | 2 | | | | | | | | | | |
| 14 | 12110631 | ENGANCHE DISTRIBUIDOR LATON | LATON DISTRIBUTOR HOOK | 2 | | | | | | | | | | |
| 15 | 12024289 | AMARRE ENGANCHE DISTRIBUI | DISTRIBUTOR HOOK FASTENING | 2 | | | | | | | | | | |
| 16 | 12041629 | PROTECTOR FUGAS | LEAKAGE PROTECTOR | 2 | | | | | | | | | | |
| 19 | 12049052 | JUNTA 53,57x3,53 SOP DISTRI INFE | O-RING Ø53,57 x 3,53 LOW. DISTRIB. | 1 | | | | | | | | | | |
| 20 | 12049055 | JUNTA TORICA Ø50,39 x 3,53 | O-RING Ø50,39 x 3,53 | 1 | | | | | | | | | | |
| 21 | 12041930 | ARBOL LAVADO | WASHING TREE | 1 | | | | | | | | | | |
| 22 | 12009986 | ABRAZADERA 32-50L | 32-50L CLAMP | 2 | | | | | | | | | | |
| 23 | 12103941 | CODO ASPIRACION CONCEPT | SUCTION ELBOW ADVANCE | 1 | | | | | | | | | | |
| 24 | 12041926 | CODO IMPULSION CONCEPT | EXPULSION ELBOW ADVANCE | 1 | | | | | | | | | | |
| 25 | 12111791 | RAMA ACLARADO CONCEPT EVO | RINSE BRANCH CONCEPT EVO | 2 | | | | | | | | | | |
| 26 | 12113893 | EJE ACLARADO CONCEPT EVO | RINSE SHAFT CONCEPT EVO | 2 | | | | | | | | | | |
| 27 | 12009829 | TORNILLO ESPECIAL M.5X0.8 | SPECIAL SCREW M.5X0.8 | 2 | | | | | | | | | | |
| 28 | 12115944 | CALZO EJE LAVADO | WASHING SHAFT SHIM | 1 | | | | | | | | | | |

| ZONA / ZONE | PARTE FUNCIONAL LAVADO / WASHING FUNCTIONAL PART | LÁMINA / DRAWING | C-3381 | FAGOR |
|---|---|---|---|---|

| ITEM | REFERENCIA REFERENCE | DENOMINACIÓN | DENOMINATION | CO-502W | | | | | | | RECOMMENDED | ELIMINADO ELIMINATED | INTRODUCIDO INTRODUCED | NOTAS / NOTES |
|---|---|---|---|---|---|---|---|---|---|---|---|---|---|---|
| | **19022347** | **KIT DOSIFICADOR DETERGENTE EVO** | **DETERGENT DISPENSER KIT EVO** | | | | | | | | | | | |
| 29 | 12102040 | SOPORT. DOSIFICADORES | DISPENSERS SUPPORT | 1 | | | | | | | | | | |
| 30 | 12024216 | DOSIFIC. DGTE REGULABLE G300 | REGUL. DETERG. DISPENSER G300 | 1 | | | | | | | X | | | |
| 31 | 12024531 | INYECTOR DETERGENTE INOX | DETERGENT INJECTOR | 1 | | | | | | | | | | |
| 32 | 12024139 | CONDUCTO ASPIRACIÓN AZKOY CO | AZKOY SUCTION PIPE | 1 | | | | | | | | | | |
| 33 | 11000079 | CONDUCTO DOSIF. TRANSP 6X4 | DISPENSER TRANSPARENT PIPE | 1 | | | | | | | | | | |
| 34 | 12023707 | BRIDA ELASTICA TUBO | ELASTIC CLAMP FOR PIPES | 1 | | | | | | | | | | |
| 35 | 12024353 | PESO FILTRO | FILTER'S WEIGHT | 1 | | | | | | | | | | |

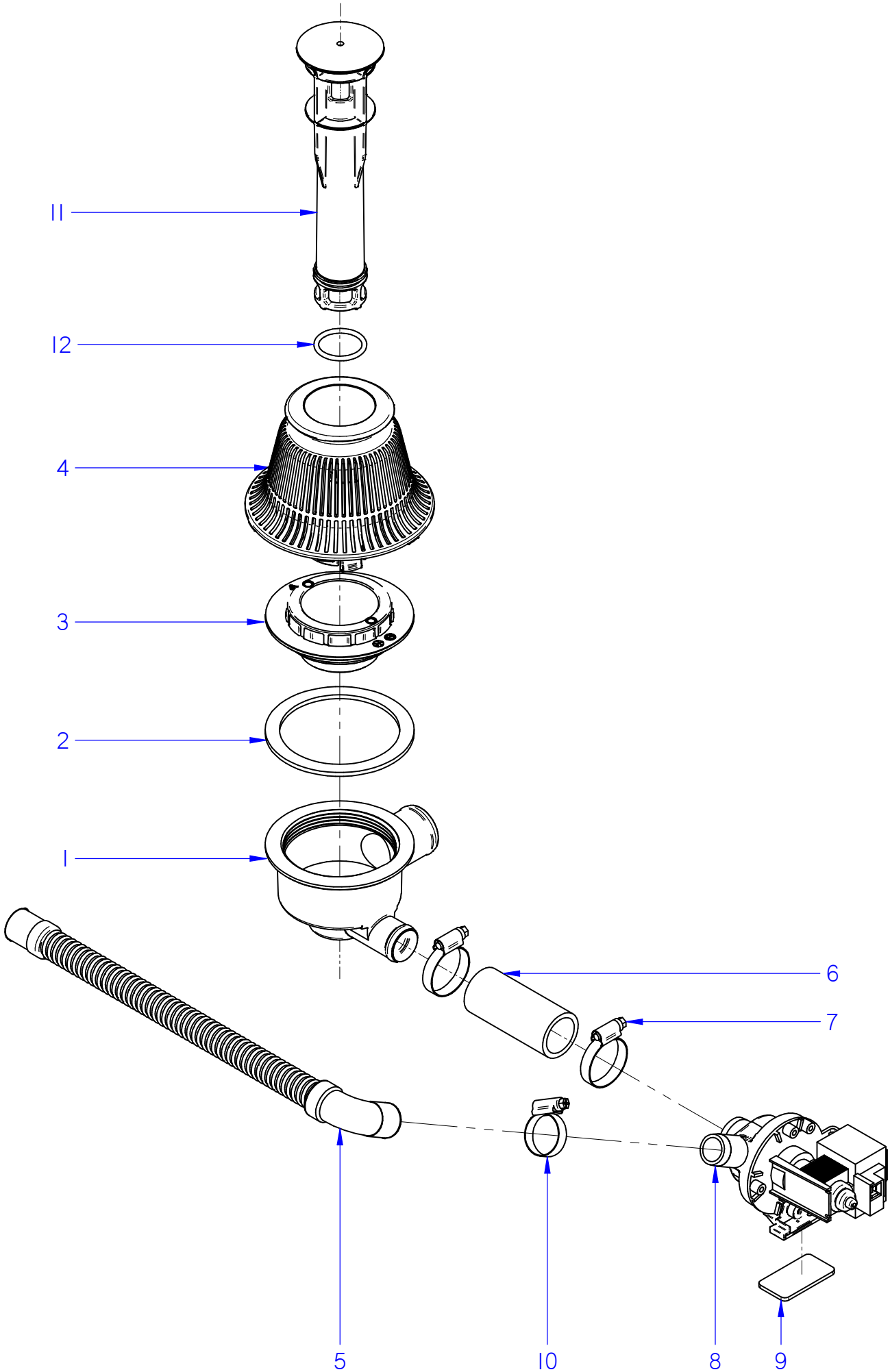


ITEM MARCADO EN COLOR = REPUESTO RECOMENDADO
COLOURED ITEM = RECOMMENDED SPARE PART

| N plano / Drawing N. | Firma / Signature | Fecha / Date | Aparato / Appliance | Lamina / Sheet | |
|---|---|---|---|---|---|
| C-3382 | Iban R. | 02-2015 | DESAGÜE / DRAINING PART<br>LAVAVAJILLAS COP-502W DISHWASHER | 3 | Fagor Industrial S.Coop. FAGOR<br>Oñate |

| ZONA / ZONE | DESAGÜE / DRAIN | LÁMINA / DRAWING | C-3382 | FAGOR |
|---|---|---|---|---|

| ITEM | REFERENCIA REFERENCE | DENOMINACIÓN | DENOMINATION | CO-502W | | | | | | | RECOMMENDED | ELIMINADO ELIMINATED | INTRODUCIDO INTRODUCED | NOTAS / NOTES |
|---|---|---|---|---|---|---|---|---|---|---|---|---|---|---|
| 1 | 12041533 | CUBETA A.F. | FRONT LOADING PAIL | 1 | | | | | | | | | | |
| 2 | 12041925 | JUNTA Ø110xØ89x3.5 | Ø110xØ89x3.5 SEAL | 1 | | | | | | | | | | |
| 3 | 12041600 | AMARRE CUBETA A.F. ADVANCE | FRONT LOADING PAIL FASTENING | 1 | | | | | | | | | | |
| 4 | 12049633 | FILTRO COMPLETO CONCEPT | COMPLETE FILTER CONCEPT | 1 | | | | | | | | | | |
| 5 | 12023666 | MANGUERA DESAGÜE | DRAINING PIPE | 1 | | | | | | | X | | | |
| 6 | 12041924 | COND. CUBETA-BOMBA DESAGÜE | PAIL - DRAINING PUMP PIPE | 1 | | | | | | | | | | |
| 7 | 12009997 | ABRAZADERA 25-40 | 25-40 CLAMP | 2 | | | | | | | | | | |
| 8 | 12094265 | BOMBA DESAGÜE | DRAINING PUMP | 1 | | | | | | | X | | | |
| 9 | 12010021 | JUNTA GUIA | GUIDE SEAL | 1 | | | | | | | | | | |
| 10 | 12010023 | ABRAZADERA 20-32 | 20-32 CLAMP | 1 | | | | | | | | | | |
| 11 | 12114854 | ALIVIADERO COMP. VERSION BD | DR. PUMP VERSION SPILLWAY | 1 | | | | | | | | | | |
| 12 | 12115850 | JUNTA TORICA ALIVIADERO | SPILLWAY O-RING | 1 | | | | | | | | | | |

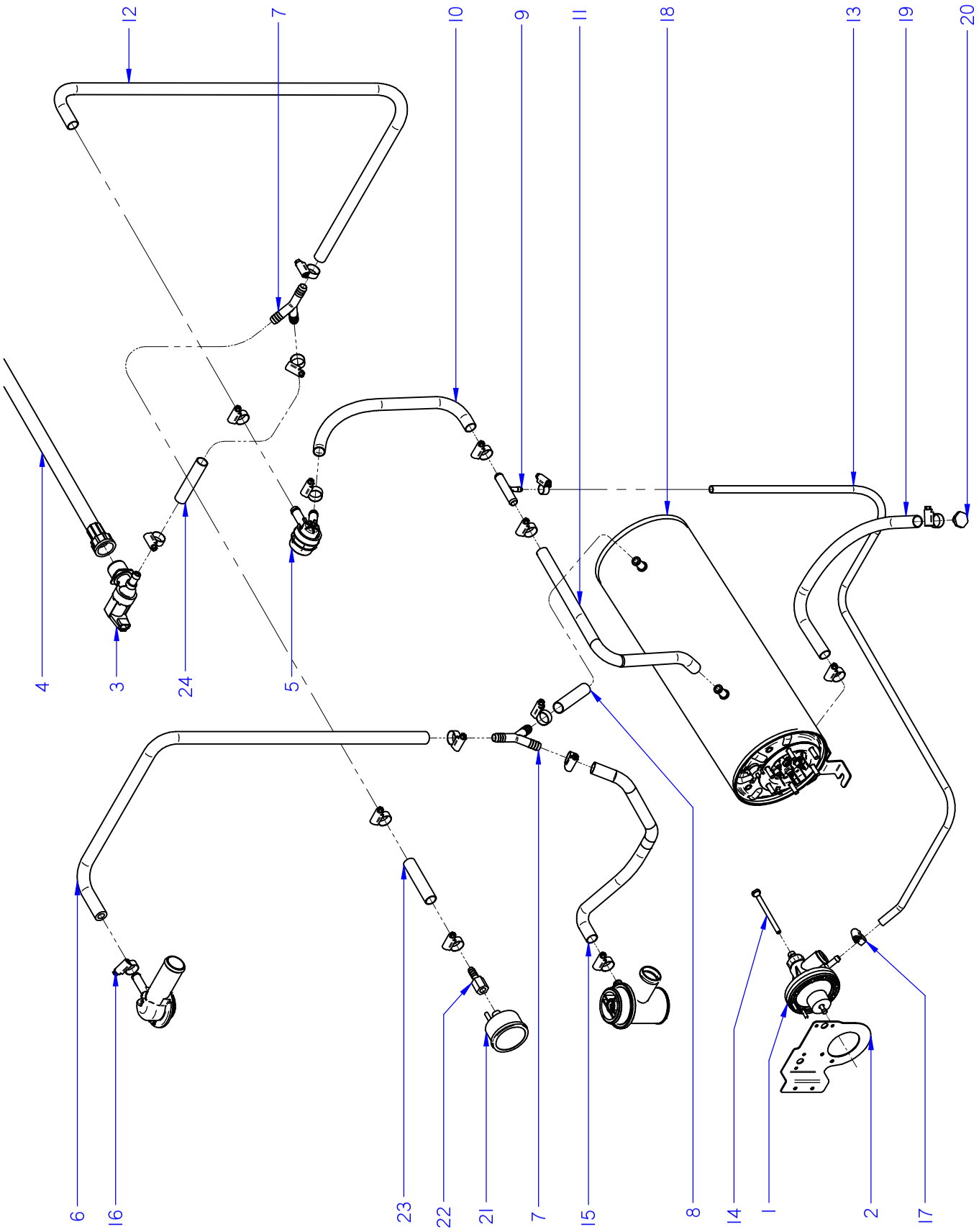


ITEM MARCADO EN COLOR = REPUESTO RECOMENDADO
COLOURED ITEM = RECOMMENDED SPARE PART

| N plano / Drawing N. | Firma / Signature | Fecha / Date | Aparato / Appliance | Lamina / Sheet | |
|---|---|---|---|---|---|
| C-3383 | Iban R. | 2015-02 | ACLARADO / RINSING PART<br>LAVAVAJILLAS CO-502W DISHWASHER | 4 | Fagor Industrial S.Coop. FAGOR<br>Onate |

| ZONA / ZONE | PARTE FUNCIONAL ACLARADO / FUNCTIONAL RINSE PART | LÁMINA / DRAWING | C-3383 | FAGOR |
|---|---|---|---|---|

| ITEM | REFERENCIA REFERENCE | DENOMINACIÓN | DENOMINATION | CO-502W | | | | | | | RECOMMENDED | ELIMINADO ELIMINATED | INTRODUCIDO INTRODUCED | NOTAS / NOTES |
|---|---|---|---|---|---|---|---|---|---|---|---|---|---|---|
| 1 | 12045206 | DOSIFICADOR ABRILL. AQUA | AQUA RINSE AID DISPENSER | 1 | | | | | | | X | | | |
| 2 | 12049650 | SOPORTE TERMOSTATO Y DOSIFIC | THERMOST. AND DISPENSER SUPP. | 1 | | | | | | | | | | |
| 3 | 12095427 | E.V SIMPLE 220V SALIDA A 90º | SIMPLE E.V 90º EXIT | 1 | | | | | | | X | | | |
| 4 | 12024115 | MANGUERA ENTRADA AGUA | WATER SUPPLY HOSE | 1 | | | | | | | | | | |
| 5 | 12024568 | VALVULA ANTIRRETORNO | NON-RETURN VALVE | 1 | | | | | | | | | | |
| 6 | 11000083 | TUBO GOMA NEGRA D 17x10 | BLACK RUBBER PIPE D 17x10 | 1 | | | | | | | | | | |
| 7 | 12023511 | RACORD EN Y | Y FITTING | 2 | | | | | | | | | | |
| 8 | 11000083 | TUBO GOMA NEGRA D 17x10 | BLACK RUBBER PIPE D 17x10 | 1 | | | | | | | | | | |
| 9 | 12025288 | TOMA PRESION | PRESSURE FITTING | 1 | | | | | | | | | | |
| 10 | 11000083 | TUBO GOMA NEGRA D 17x10 | BLACK RUBBER PIPE D 17x10 | 1 | | | | | | | | | | |
| 11 | 11000083 | TUBO GOMA NEGRA D 17x10 | BLACK RUBBER PIPE D 17x10 | 1 | | | | | | | | | | |
| 12 | 11000083 | TUBO GOMA NEGRA D 17x10 | BLACK RUBBER PIPE D 17x10 | 1 | | | | | | | | | | |
| 13 | 11000070 | TUBO GOMA NEGRO D 10,5*5 | BLACK RUBBER PIPE D 10,5*5 | 1 | | | | | | | | | | |
| 14 | 12024139 | CONDUCTO ASPIRACIÓN AZKOY CO | AZKOY SUCTION PIPE | 1 | | | | | | | | | | |
| 15 | 11000083 | TUBO GOMA NEGRA D 17x10 | BLACK RUBBER PIPE D 17x10 | 1 | | | | | | | | | | |
| 16 | 12010036 | ABRAZADERA 12-20 | 12-20 CLAMP | 14 | | | | | | | | | | |
| 17 | 12010047 | ABRAZADERA 8-14L | 8-14L CLAMP | 2 | | | | | | | | | | |
| 18 | 12097081 | CALDERIN CONCEPT SOLDADO | CONCEPT BOILER WELDED | 1 | | | | | | | | | | |
| 19 | 11000083 | TUBO GOMA NEGRA D 17x10 | BLACK RUBBER PIPE D 17x10 | 1 | | | | | | | | | | |
| 20 | 12041528 | Tapon M10x1.5 | M10x1.5 CAP | 1 | | | | | | | | | | |
| 21 | 12115146 | MANOMETRO W NSF POST | MANOMETER W NSF POST | 1 | | | | | | | X | | | |
| 22 | 12115147 | ADAPTADOR MANOMETRO 1-4 NPT | MANOMETER ADAPTER 1-4 NPT | 1 | | | | | | | | | | |
| 23 | 11000083 | TUBO GOMA NEGRA D 17x10 | BLACK RUBBER PIPE D 17x10 | 1 | | | | | | | | | | |
| 24 | 11000083 | TUBO GOMA NEGRA D 17x10 | BLACK RUBBER PIPE D 17x10 | 1 | | | | | | | | | | |
| | | | | | | | | | | | | | | |
| | | | | | | | | | | | | | | |
| | | | | | | | | | | | | | | |
| | | | | | | | | | | | | | | |
| | | | | | | | | | | | | | | |
| | | | | | | | | | | | | | | |
| | | | | | | | | | | | | | | |

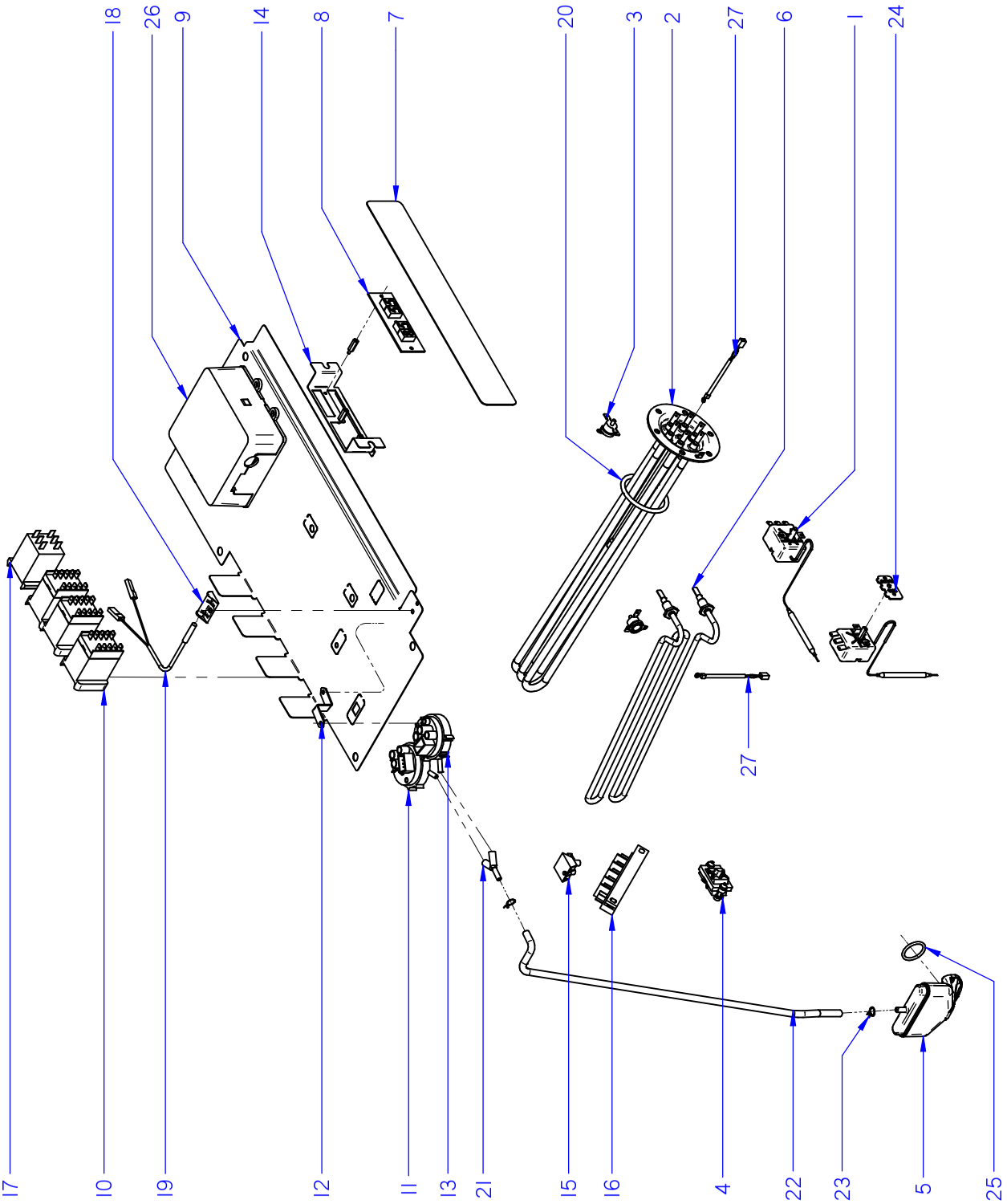


ITEM MARCADO EN COLOR = REPUESTO RECOMENDADO
COLOURED ITEM = RECOMMENDED SPARE PART

| N plano / Drawing N. | Firma / Signature | Fecha / Date | Aparato / Appliance | Lamina |
|---|---|---|---|---|
| C-3384 | Iban R. | 2015-02 | CONJUNTO ELECTRICO / ELECTRICAL PART<br>LAVAVAJILLAS CO-502W DISHWASHER | 5 |

Fagor Industrial S.Coop. FAGOR
Onate

| ZONA / ZONE | CONJUNTO ELECTRICO / ELECTRICAL PART | LÁMINA / DRAWING | C-3384 | FAGOR |
|---|---|---|---|---|

| ITEM | REFERENCIA REFERENCE | DENOMINACIÓN | DENOMINATION | CO-502W | | | | | | | RECOMMENDED | ELIMINADO ELIMINATED | INTRODUCIDO INTRODUCED | NOTAS / NOTES |
|---|---|---|---|---|---|---|---|---|---|---|---|---|---|---|
| 1 | 12040858 | TERMOSTATO REGULABLE 85ºC | REGULABLE THERMOSTAT 85ºC | 2 | | | | | | | X | | | |
| 2 | 12098745 | RESISTENCIA CALDERIN 6KW | BOILER'S RESISTOR 6KW | 1 | | | | | | | X | | | |
| 3 | 12096597 | TERM.SEG. 261B 110ºC FAST 90 | SAFETY THER. 261B 110ºC FAST 90 | 2 | | | | | | | X | | | |
| 4 | 12024230 | RETENEDOR DE CABLE | CABLE RETAINER | 1 | | | | | | | | | | |
| 5 | 12093146 | CAMPANA TANQUE | TUB'S PRESSURE CHAMBER | 1 | | | | | | | X | | | |
| 6 | 12048965 | RESISTENCIA TANQUE 2800W | TUB'S RESISTOR 2800W | 1 | | | | | | | X | | | |
| 7 | 12112957 | EMBELLECEDOR CO-402W_CO-502W | CO-402W_CO-502W STICKER | 1 | | | | | | | X | | | |
| 8 | 12010417 | VISUALIZADOR 12V LEDS | 12V LEDS DISPLAY | 1 | | | | | | | X | | | |
| 9 | 12044604 | SOP. COMPONENTES ELECTRICOS | ELECTRIC COMPONENTS SUPPORT | 1 | | | | | | | | | | |
| 10 | 12024011 | CONTACTOR 230 V. 50-60 HZ | 230 V. 50-60 HZ CONTACTOR | 3 | | | | | | | X | | | |
| 11 | 12096970 | PRESOSTATO 1,40-6,30 BAR SIMPLE | 1,40-6,30 BAR PRESSURE SWITCH | 1 | | | | | | | X | | | |
| 12 | 12098323 | SOPORTE PRESOSTATO AF | PRESSURE SWITCH SUPPORT | 1 | | | | | | | | | | |
| 13 | 12096968 | PRESOSTATO 1,40-6,30 BAR SIMPLE | 1,40-6,30 BAR PRESSURE SWITCH | 1 | | | | | | | X | | | |
| 14 | 12002652 | SOPORTE VISUALIZADOR | DISPLAY SUPPORT | 1 | | | | | | | | | | |
| 15 | 12024110 | REGLETA DE CONEXIONES | CONNECTION STRIP | 1 | | | | | | | | | | |
| 16 | 12025183 | REGLETA AUXILIAR FV-122 | AUX. CONNECTION STRIP FV-122 | 1 | | | | | | | | | | |
| 17 | 12023706 | RELE 230V. 16A 50-60 HZ | 230V. 16A 50-60 HZ RELAY | 1 | | | | | | | X | | | |
| 18 | 12024066 | AMARRE INTERRUPTOR MAGNETICO | MAGNETIC SWITCH'S SUPPORT | 1 | | | | | | | | | | |
| 19 | 12024477 | INTERRUPTOR MAGNETICO | MAGNETIC SWITCH | 1 | | | | | | | X | | | |
| 20 | 12010051 | JUNTA TORICA RESIST. CALDERIN | BOILER'S RESISTOR'S O-RING | 1 | | | | | | | X | | | |
| 21 | 12023510 | RACORD EN Y | Y FITTING | 1 | | | | | | | | | | |
| 22 | 11000066 | TUBO GOMA NEGRO D 8*4 | BLACK RUBBER PIPE D 8*4 | 1 | | | | | | | | | | |
| 23 | 12023707 | BRIDA ELASTICA TUBO | ELASTIC CLAMP FOR PIPES | 2 | | | | | | | | | | |
| 24 | 12044848 | REGULADOR A 60ºC Tt DE 85ºC | 60ºC Tt DE 85ºC REGULATOR | 1 | | | | | | | | | | |
| 25 | 12093145 | JUNTA TORICA CAMPANA | PRESSURE CHAMBER'S O-RING | 1 | | | | | | | | | | |
| 26 | 12008750 | CONTROL TARJETA 5 RELES | 5 RELAY CONTROL CARD | 1 | | | | | | | X | | | |
| 27 | 12025036 | CONJUNTO SONDA 64kOHM NTC | 64kOHM NTC THERMOSTAT | 2 | | | | | | | | | | |

| ZONA / ZONE | VARIOS / VARIOUS | | LÁMINA / DRAWING | | FAGOR |
|---|---|---|---|---|---|

| ITEM | REFERENCIA REFERENCE | DENOMINACIÓN | DENOMINATION | CO-502W | | | | | | | RECOMMENDED | ELIMINADO ELIMINATED | INTRODUCIDO INTRODUCED | NOTAS / NOTES |
|---|---|---|---|---|---|---|---|---|---|---|---|---|---|---|
| | 12114419 | CABLEADO PORTAMAN W | CNTRL. PANEL WIRING W | 1 | | | | | | | | | | |
| | 12120084 | INSTALACION GENERAL CO W, 48, 64 | ELECTRICAL WIRING CO W, 48, 64 UL | 1 | | | | | | | | | | |
| | 12023974 | CABLE DE ALIMENTACION USA | USA POWER CORD | 1 | | | | | | | | | | |
| | 12009946 | CABLEADO TENSOR | TENSIONER WIRING | 2 | | | | | | | | | | |

| ZONA / ZONE | RECOMENDADOS / RECOMMENDED | LÁMINA / DRAWING | | FAGOR |
|---|---|---|---|---|

| ITEM | REFERENCIA REFERENCE | DENOMINACIÓN | DENOMINATION | CO-502W | | | | | | | | ELIMINADO ELIMINATED | INTRODUCIDO INTRODUCED | NOTAS / NOTES |
|---|---|---|---|---|---|---|---|---|---|---|---|---|---|---|
| 1 | 12024376 | CONDENSADOR 10MF | 10MF CAPACITOR | 1 | | | | | | | | | | C-3381 |
| 4 | 12102834 | MOTOBOMBA 590KW 60Hz | WASHIG PUMP 590KW 60Hz | 1 | | | | | | | | | | C-3381 |
| 30 | 12024216 | DOSIFIC. DGTE REGULABLE G300 | REGUL. DETERG. DISPENSER G300 | 1 | | | | | | | | | | C-3381 |
| 5 | 12023666 | MANGUERA DESAGÜE | DRAINING PIPE | 1 | | | | | | | | | | C-3382 |
| 8 | 12094265 | BOMBA DESAGÜE | DRAINING PUMP | 1 | | | | | | | | | | C-3382 |
| 1 | 12045206 | DOSIFICADOR ABRILL. AQUA | AQUA RINSE AID DISPENSER | 1 | | | | | | | | | | C-3383 |
| 3 | 12095427 | E.V SIMPLE 220V SALIDA A 90º | SIMPLE E.V 90º EXIT | 1 | | | | | | | | | | C-3383 |
| 21 | 12115146 | MANOMETRO W NSF POST | MANOMETER W NSF POST | 1 | | | | | | | | | | C-3383 |
| 1 | 12040858 | TERMOSTATO REGULABLE 85ºC | REGULABLE THERMOSTAT 85ºC | 2 | | | | | | | | | | C-3384 |
| 2 | 12098745 | RESISTENCIA CALDERIN 6KW | BOILER'S RESISTOR 6KW | 1 | | | | | | | | | | C-3384 |
| 3 | 12096597 | TERM.SEG. 261B 110ºC FAST 90 | SAFETY THER. 261B 110ºC FAST 90 | 2 | | | | | | | | | | C-3384 |
| 5 | 12093146 | CAMPANA TANQUE | TUB'S PRESSURE CHAMBER | 1 | | | | | | | | | | C-3384 |
| 6 | 12048965 | RESISTENCIA TANQUE 2800W | TUB'S RESISTOR 2800W | 1 | | | | | | | | | | C-3384 |
| 7 | 12112957 | EMBELLECEDOR CO-402W,CO-502W | CO-402W, CO-502W STICKER | 1 | | | | | | | | | | C-3384 |
| 8 | 12010417 | VISUALIZADOR 12V LEDS | 12V LEDS DISPLAY | 1 | | | | | | | | | | C-3384 |
| 10 | 12024011 | CONTACTOR 230 V. 50-60 HZ | 230 V. 50-60 HZ CONTACTOR | 3 | | | | | | | | | | C-3384 |
| 11 | 12096970 | PRESOSTATO 1,40-6,30 BAR SIMPLE | 1,40-6,30 BAR PRESSURE SWITCH | 1 | | | | | | | | | | C-3384 |
| 13 | 12096968 | PRESOSTATO 1,40-6,30 BAR SIMPLE | 1,40-6,30 BAR PRESSURE SWITCH | 1 | | | | | | | | | | C-3384 |
| 17 | 12023706 | RELE 230V. 16A 50-60 HZ | 230V. 16A 50-60 HZ RELAY | 1 | | | | | | | | | | C-3384 |
| 19 | 12024477 | INTERRUPTOR MAGNETICO | MAGNETIC SWITCH | 1 | | | | | | | | | | C-3384 |
| 29 | 12010051 | JUNTA TORICA RESIST. CALDERIN | BOILER'S RESISTOR'S O-RING | 1 | | | | | | | | | | C-3384 |

# CO, COP 504 W

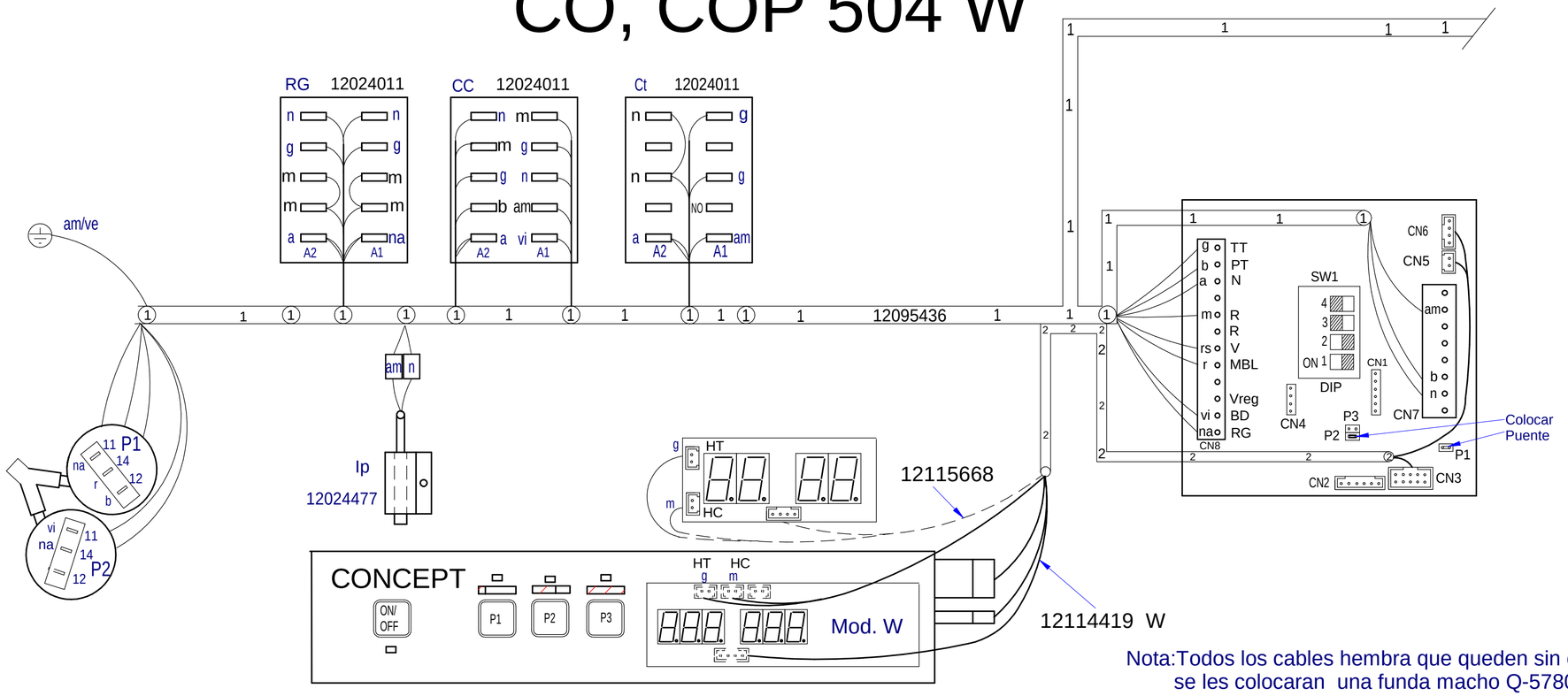


Nota:Todos los cables hembra que queden sin conectar se les colocaran una funda macho Q-578006

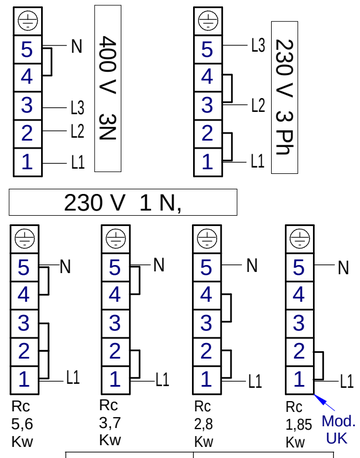


| | |
|---|---|
| ① | 12120084 |
| ② | 12095673 |
| ③ | 12992009 |
| | |
| Prensa estopas | 12009927 |
| Esquema teorico | 12103192 |
| Indicador de componentes | 12022162 |
| Leyenda | 12103338 |

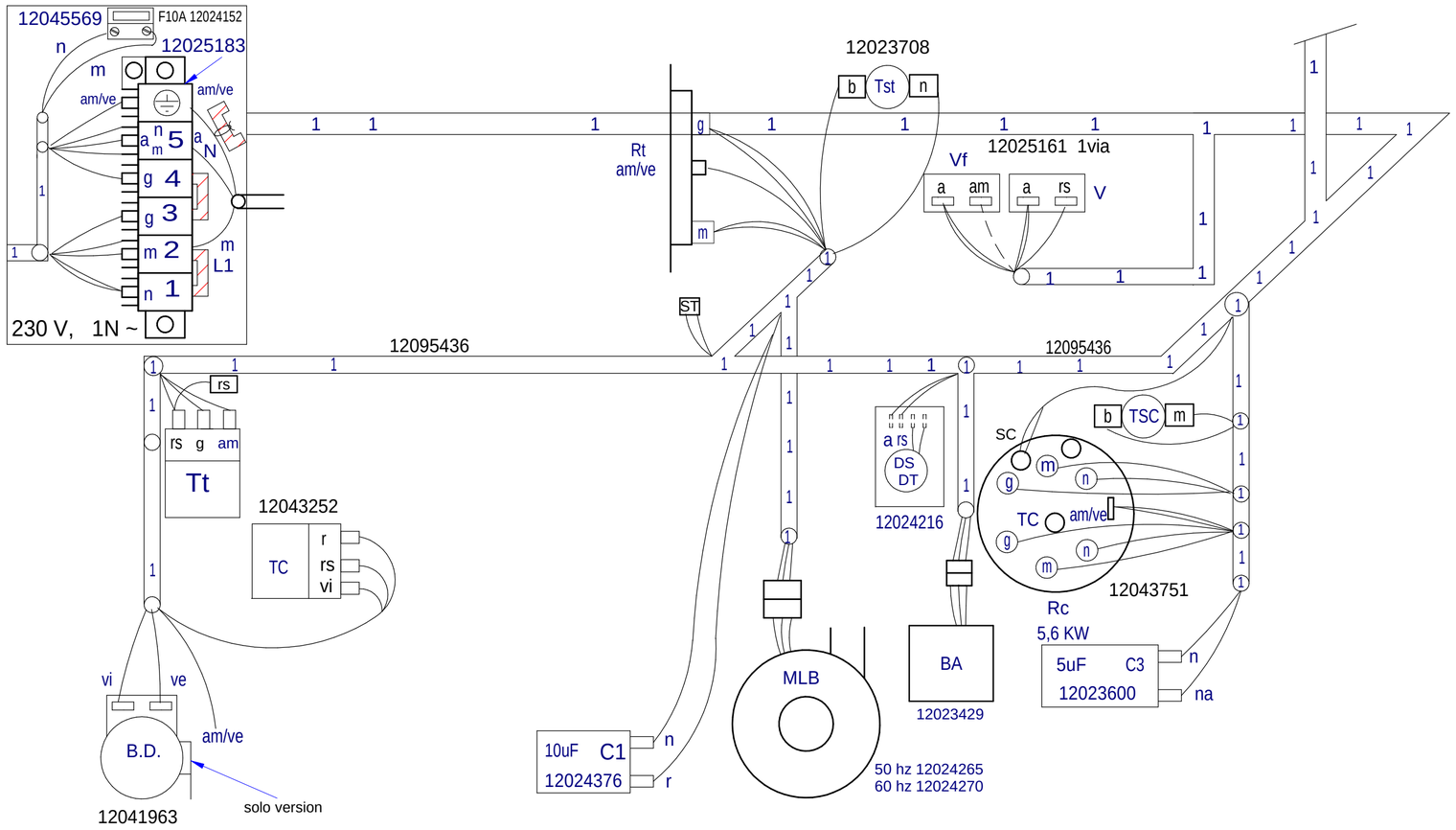


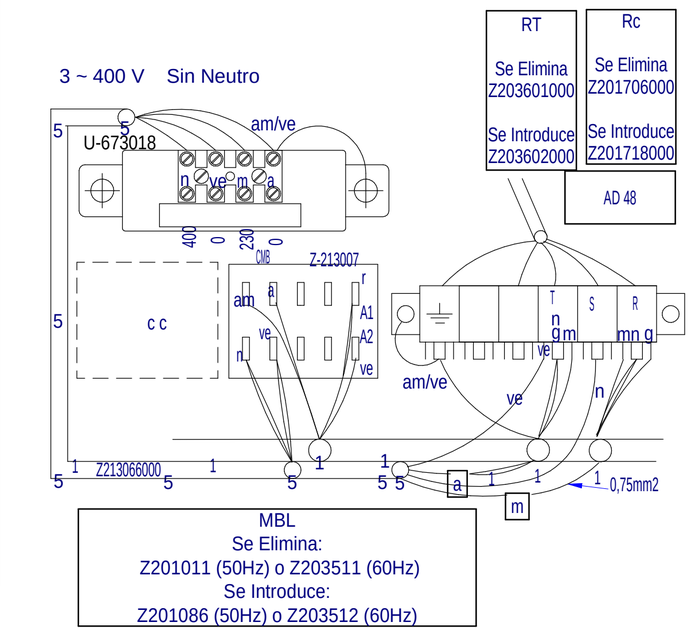


MBL
Se Elimina:
Z201011 (50Hz) o Z203511 (60Hz)
Se Introduce:
Z201086 (50Hz) o Z203512 (60Hz)

| | | | | | |
|---|---|---|---|---|---|
| - | Plano Montaje CO, COP 504 W (64 W) | - | 12114492 | | |
| Nº | TITLE | QTY | CODE | MATERIAL | TREATMENT |

GENERAL TOLERANCES: ISO 2768-1 Very Coarse

| LINEAR | Fine | Medium | Coarse | Very Coarse |
|---|---|---|---|---|
| <3mm | ±0.05 | ±0.10 | ±0.15 | |
| 3-6mm | ±0.05 | ±0.10 | ±0.20 | |
| 6-30mm | ±0.10 | ±0.20 | ±0.50 | |
| 30-120mm | ±0.15 | ±0.30 | ±0.80 | |
| 120-400mm | ±0.20 | ±0.50 | ±1.20 | |
| 400-1000mm | ±0.30 | ±0.80 | ±2.00 | |
| 1000-2000mm | ±0.50 | ±1.20 | ±3.00 | |

| ANGULAR | Fine | Medium | Coarse | Very Coarse |
|---|---|---|---|---|
| <10mm | ±1° | ±1°30' | ±3° | |
| 10-50mm | ±30' | ±1° | ±2° | |
| 50-120mm | ±20' | ±30' | ±1° | |
| 120-400mm | ±10' | ±15' | ±30' | |
| >400mm | ±5' | ±10' | ±20' | |

GENERAL TOLERANCE FOR FORM AND POSITION: ISO 2768-2

LAVAVAJILLAS

FAGOR INDUSTRIAL

| DESIGNED BY | VALIDATED BY | DATE |
|---|---|---|
| M.Maillo | A.G. | 12.06.2014 |

| | |
|---|---|
| SHEET FORMAT: | A2 |
| DESING CENTER: | ONA |
| MAT STATUS: | |
| DOC STATUS: | |
| SHEET: | 1 / 1 |
| SCALE: | 1:1 |

12114492 REVISION -

PROPOSED BY: - ISSUE DATE:

# CO-502 W, COP-504 W

208-240 V, 60Hz, 3Ph

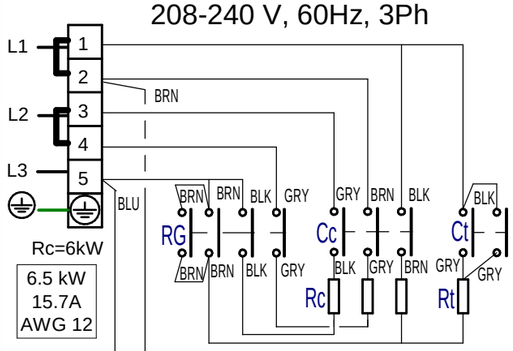


Rc=6kW

6.5 kW
15.7A
AWG 12

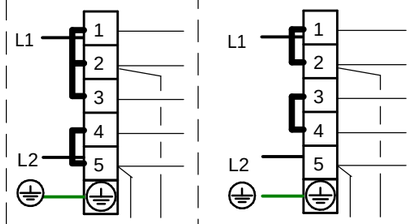


Rc=6kW

6.5 kW
27.1A
AWG 10

208-240 V
60Hz,1Ph




Rc=3kW

3.5 kW
14.6A
AWG 12

# CO-142W, COP-174 W

400 V. 3N

CO-142 W
15 kW
36.1A
AWG 8

COP-174 W
18 kW
43.4A
AWG 6

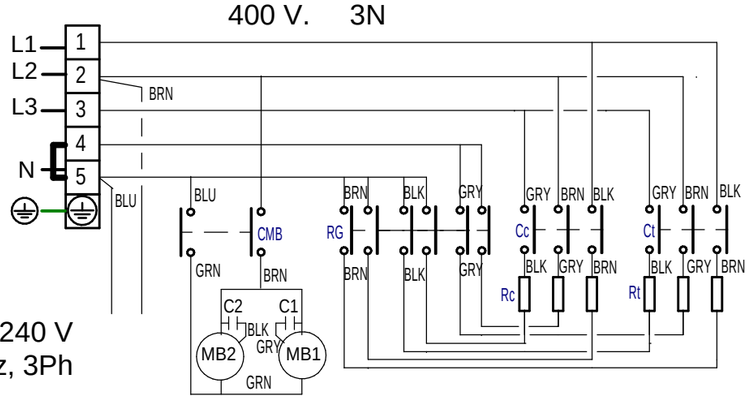


208-240 V
60Hz, 3Ph

# CO-402 W

208-240 V, 60Hz,1Ph

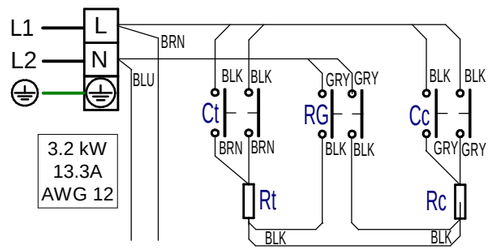


3.2 kW
13.3A
AWG 12

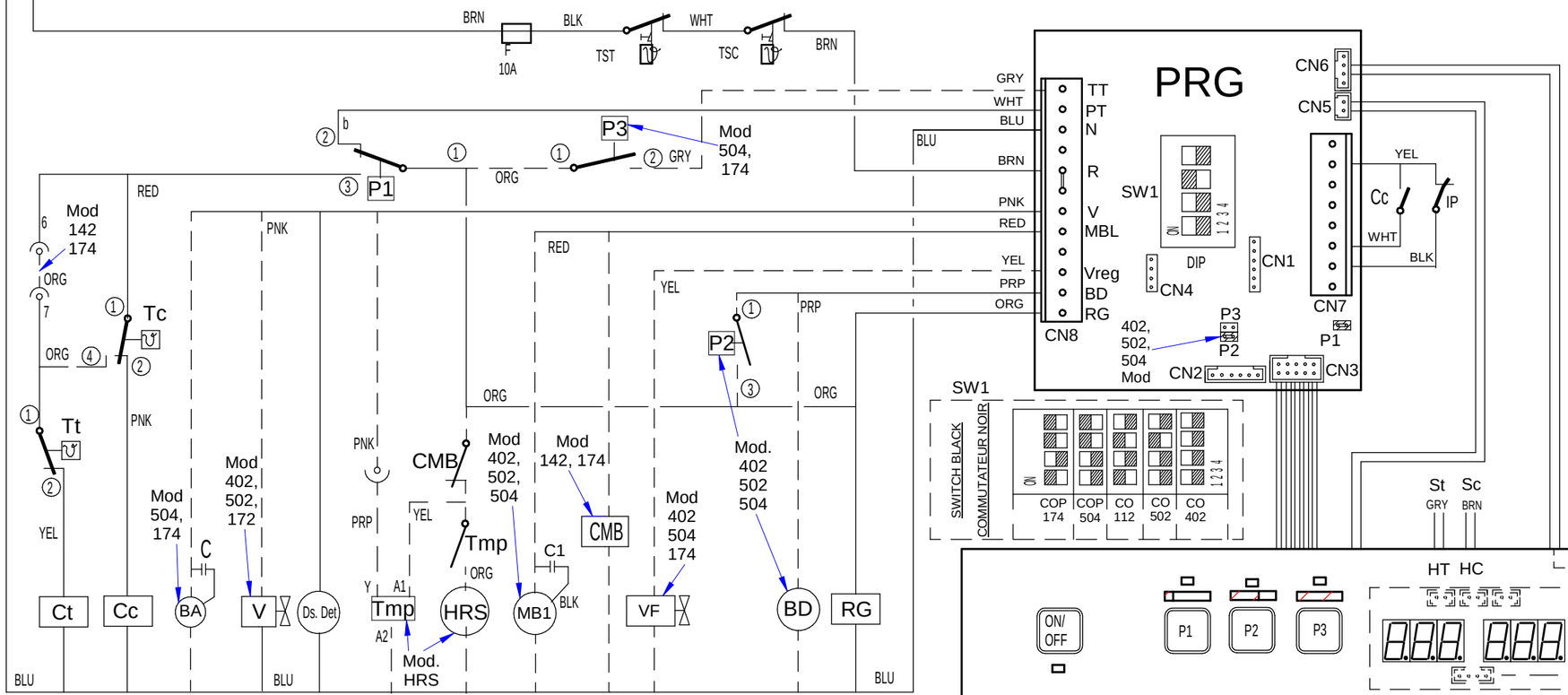


## CYCLE

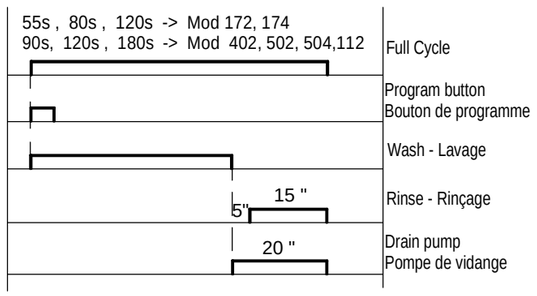


# Ref. 12114451

| - | Esquema Teorico CO XX2 W, COP XX4 W | - | 12114451 | | |
|---|---|---|---|---|---|
| Nº | TITLE | QTY | CODE | MATERIAL | TREATMENT |

GENERAL TOLERANCES: ISO 2768-1 Very Coarse

| LINEAR | Fine | Medium | Coarse | Very Coarse |
|---|---|---|---|---|
| <3mm | ±0.05 | ±0.10 | ±0.15 | |
| 3-6mm | ±0.05 | ±0.10 | ±0.20 | |
| 6-30mm | ±0.10 | ±0.20 | ±0.50 | |
| 30-120mm | ±0.15 | ±0.30 | ±0.80 | |
| 120-400mm | ±0.20 | ±0.50 | ±1.20 | |
| 400-1000mm | ±0.30 | ±0.80 | ±2.00 | |
| 1000-2000mm | ±0.50 | ±1.20 | ±3.00 | |

GENERAL TOLERANCE FOR FORM AND POSITION: ISO 2768-2

| ANGULAR | Fine | Medium | Coarse | Very Coarse |
|---|---|---|---|---|
| <10mm | ±1º | | ±1º30' | ±3º |
| 10-50mm | ±30' | | ±1º | ±2º |
| 50-120mm | ±20' | | ±30' | ±1º |
| 120-400mm | ±10' | | ±15' | ±30' |
| >400mm | ±5' | | ±10' | ±20' |

LAVAVAJILLAS

FAGOR INDUSTRIAL

| DESIGNED BY | VALIDATED BY | DATE |
|---|---|---|
| M.Maillo | A.gallastegui | 11.06.2014 |

| | |
|---|---|
| SHEET FORMAT: | A3 |
| DESING CENTER: | ONA |
| MAT STATUS: | |
| DOC STATUS: | |
| SHEET: | 1 / 1 |
| SCALE: | 1:1 |

12114451

REVISION

-

PROPOSED BY: - ISSUE DATE:

# LEYENDA APERTURA FRONTAL Y CAPOTA

| | ESPAÑOL | ENGLISH | FRANÇAIS | DEUTSCH | ITALIANO | 中文 |
|---|---|---|---|---|---|---|
| Ⓐ Ⓑ | Puntos de conexion con R | Conecction point with R | Points de conexion R | Anschlußpunkte mit R | Punti di collegamento con R | 带R接触点 |
| BA | Bomba Aclarado | Rinse pump | | | | |
| BD | Bomba desagüe | Drain pump | Pompe de vidange | Abflußpumpe | Pompa scarico | 排水泵 |
| C1, C2, C3 | Condensador | Condenser | Condensateur | Kondensator | Condensatore | 电容 |
| CMB | Contactor bomba lavado | Wash pump contactor | Contacteur pompe lavage | Türrelais | Contattore pompa lavaggio | 清洗泵接触器 |
| Cc | Contactor calentamiento calderin | Boiler heating contactor | Contacteur chauf. surchauffeur | Kontaktschütz Waschpumpe | Contattore riscaldamento boiler | 升温箱加热接触器 |
| Ct | Contactor calentamiento tanque | Tank heating contactor | Contacteur chaufage cuve | Kontaktschütz Boilerheizung | Contattore riscaldamento serbatoio | 水箱加热接触器 |
| CP | Rele puerta | Door relay | Relais porte | Kontaktschütz Heizung Tank | Rele porta | 门继电器 |
| Ds. | Dosificador | Detergent doser | Dosseur | Dosierer Spülmittel | Dosatore detersivo | 清洗剂药液泵 |
| E.B | Electrobomba de presion | Electric pressure pump | Electropompe de pression | Elektro-Drucksteigungspumpe | Electropompa pressione | 电子压力泵 |
| IG | Interruptor general | Main switch | Interrupteur general | Hauptschalter | Interruttore generale | 主开关 |
| IP | Micro puerta | Door microswitch | Micro porte | Mikroschalter Tür | Micro porta | 门磁开关 |
| H1 | Piloto de encendido | Operation light | Voyant funcionement | Betriebsanzeigelampe | Spia accensione | 运行指示灯 |
| H2 | Piloto marcha | Start light | Voyant demarrage | Startanzeigelampe | Spia avvio | 开始指示灯 |
| H3 | Piloto maquina preparada | Light machine ready | Voyant machine prêt | Betriebsbereitschaftsanzeigelampe | Pilota macchina preparata | 加热完成 指示灯 |
| HSal | Piloto falta de Sal | Light Lack of Salt | | | | |
| MB1, MB2 | Bomba lavado | Wash pump | Pompe lavage | Waschpumpe | Pompa lavaggio | 清洗泵 |
| M | Motor programador | Motor programmer | Moteur du programmateur | Motor Programmiervorrichtung | Motore programmatore | 程序电机 |
| M Av. R | Motor program. avance rapido | Motor program. rapid advance | Moteur du progr.avance rapide | Motor Programmiervorrich. Betrieb | Motore programmatore avanzamento rapido | 程序电机. 高速高级 |
| M1 | Micro programador marcha | Micro programmer on | Micro du programm. de marche | Motor Programmiervorrich. Waschen | Micro programma. di funzionamento | 微程序 开 |
| M2 | Micro programador lavado | Micro programmer wash | Micro du programm. de lavage | Motor Programmiervorrich. Spülen | Micro programmatore di lavaggio | 微程序 清洗 |
| M3 | Micro programador aclarado | Micro programmer rinse | Micro du programm. de rinçage | Motor Programmiervorrich. Vorlauf | Micro programmatore di risciacquo | 微程序 喷淋 |
| M4, M5 | Micro programador avance | Micro programmer advance | Micro du programm. avance | Motor Programmiervorrich. schneller Vorlauf | Micro programmatore avanzamento | 微程序 高级 |
| P1, P3 | Presostato | Pressure switch | Pressostat | Druckwächter | Pressostato | 压力开关 |
| P2 | Presostato limitador | Hi-limit pressure switch | Pressostat de securité | Begrenzer Druckwächter | Pressostato limitatore | 高水位限制 压力开关 |
| R | Rele de Generador de A.C. | Generator relay | Relais du Generateur | Relais Generator | Rele Generatore | 热水供应器继电器 |
| RG | Rele General | Main Relay | | Stromversorgungsanschluß Gener. | | |
| Ⓛ1 Ⓛ2 Ⓛ3 Ⓝ | Alimentac. Generador A.C. | Water heater feeding | Alimentation generateur | | Alimentazione generatore | 热水供应器电源线 |
| RC | Resistencia calderin | Boiler heating element | Resistance surchauffeur | Heizwiderstand Boiler | Resistenza boiler | 升温箱加热管 |
| RT | Resistencia tanque | Tank heater | Resistance cuve | Heizwiderstand Tank | Resistenza serbatoio | 水箱加热管 |
| Tt | Termostato tanque | Tank thermostat | Thermostat de cuve | Thermostat Tank | Termostato serbatoio | 水箱温控器 |
| TC | Termostato calderin | Boiler thermostat | Thermostat surchauffeur | Thermostat kessel | Termostato boiler | 升温箱温控器 |
| Tst | Limitador tanque | Tank limiter | Limitateur de cuve | Begrenzer Tank | Limitatore serbatoio | 水箱安全温控器 |
| TSC | Limitador calderin | Boiler Hi-limit | Limiteur surchauffeur | Begrenzer Boiler | Limitatore boiler | 升温箱安全温控器 |
| TSTP | Termostato termo-stop | Termo-stop Thermostat | Thermostat Termo-stop | Thermostat Termo-stop | Termostato Termo-stop | 温度停止温控器 |
| V | Electrovalvula llenado y aclarado | Fill and rinse valve | Electrovan. remplissage rinçage | Elektroventil Füllen und Spülen | Elettroval. riempimento e risciacquo | 电磁阀 |
| Vf | Electrovalvula Aclarado Frio | Cold Water rinse valve | | | | |
| VR1, VR2, VR3, BR | Electrovalvula Descalcificacion | Soft Water valve | | | | |
| VE, | Ventilador cuadro electrico | Switchboard fan | Ventilateur tableau electrique | Schalttafelventilator | Ventilatore quadro elettrico | 风机 |
| HRS | Sistema recuperacion energia | Heat Recovery System | | | | |

| COLOR | COLORES | COLOUR | COULEURS | FARBEN | COLORE | 颜色 |
|---|---|---|---|---|---|---|
| a = BLU = | Azul | Blue | Bleu | Blau | Blu | 蓝 |
| am = YEL = | Amarillo | Yellow | Jaune | Gelb | Giallo | 黄 |
| am/ve = YEL/GRN | Amarillo/verde | Yellow / green | Jaune / vert | Gelb/grün | Giallo/verde | 黄/绿 |
| b = WHT = | Blanco | White | Blanc | Weiß | Bianco | 白 |
| g = GRY = | Gris | Grey | Gris | Grau | Grigio | 灰 |
| m = BRN = | Marrón | Brown | Marron | Braun | Marrone | 棕 |
| n = BLK = | Negro | Black | Noir | Schwarz | Nero | 黑 |
| na = ORG = | Naranja | Orange | Orange | Orange | Arancio | 橙 |
| r = RED = | Rojo | Red | Rouge | Rot | Rosso | 红 |
| rs = PNK = | Rosa | Pink | Rose | Rosa | Roseo | 粉 |
| ve = GRN = | Verde | Green | Vert | Grün | Verde | 绿 |
| vi = PRP = | Violeta | Purple | Violet | Violett | Viola | 紫 |

12103338