DESPIECE TECNICO / SPARE PARTS BOM

Hornos a gas
Fours à gaz
Gas ovens
Gas heissluftdämpfer
Forni a gas
Fornos a gás

Modelos / Models:

AG-201
ACG-201
APG-201

Septiembre 2012 September
Revisado Abril 2016 Abril Revised

FAGOR

FAGOR INDUSTRIAL

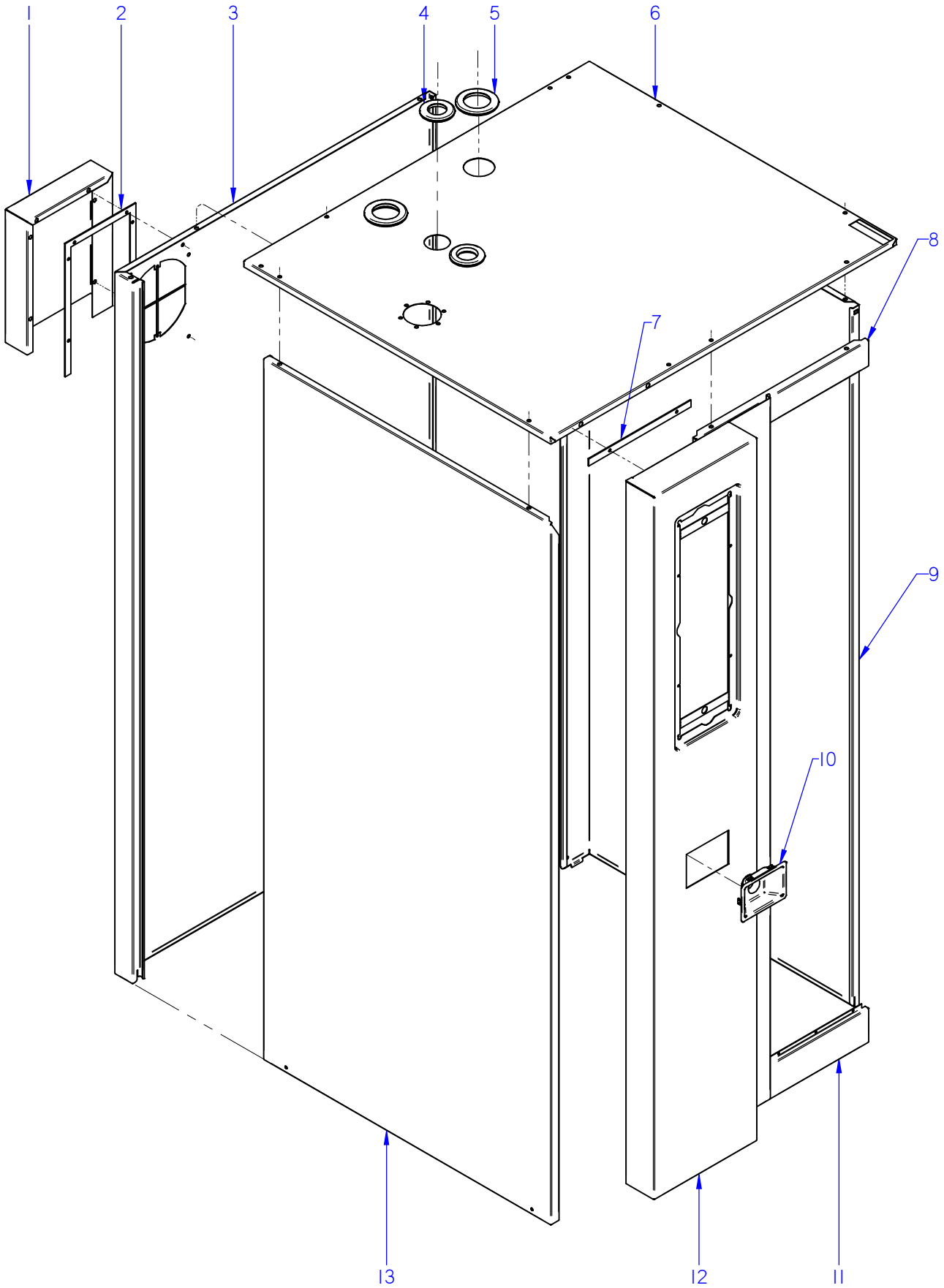

ITEM MARCADO EN COLOR = REPUESTO RECOMENDADO
COLOURED ITEM = RECOMMENDED SPARE PART

Nº plano / N º plane	Firma	Fecha / Date	Denominación / Denomination: MUEBLE / UNIT	Lamina / Sheet	
C-3072		2012-09	HORNOS AG; ACG; APG-201	1	Fagor Industrial S.Coop. FAGOR Oñate

MOD.	HORNOS / OVEN	ZONA / ZONE	MUEBLE / UNIT	PLANO DIAGRAM	C-3072

ITEM	CODIGO REFERENCE	DENOMINACION	DENOMINATION	ACG-201	AG-201	APG-201					RECOMEND.	ELIMINADO ELIMINATED	INTRODUCID. INTRODUCED	NOTAS
1	12022557	CHAPA SEPARACI. IPX5 20 SOLD.	SEPARAT. PLATE IPX5 20 WEL.	1	1	1								
2	12024081	JUNTA IPX5 20-21	SEAL IPX5 20-21	1	1	1								
3	12041103	PANEL POSTERIOR 201 ADV	REAR PANEL 201 ADV	1	1	1								
4	12039535	PASAMUROS Ø 38	Ø 38 BUSHING	2	2	2								
5	12024231	PASAMUROS CHIMENEA 101003361	FEED THROUGH FLUE PIPE 10100336	2	2	2								
6	12044454	PANEL SUPERIOR SOL. ACG 201	TOP PANEL ACG 201 SOLDIER	1	_	_								
6	12044427	PANEL SUPERIOR SOLD. AG 201	TOP PANEL AG 201 SOLDIER	_	1	1								
7	12041319	JUNTA PORTAMANDOS 201 ADV	CONTROL PANEL SEAL 201 ADV	1	1	1								
8	12041125	PANEL FRONTAL SUPE. 201 ADV	UPPER FRONT PANEL 201 ADV	1	1	1								
9	12041123	PANEL EXTERIOR DCHO 201 ADV	RIGHT PANEL 201 ADV	1	1	1								
10	12041736	EMBELLECEDOR DUCHA AD	SHOWER TRIM AD	1	1	1								
11	12041126	PANEL FRONTAL INFER. 201 ADV	LOWER FRONT PANEL 201 ADV	1	1	1								
12	12095164	PANEL PORTAMANDOS AC 201	CONTROL PANEL AC 201	1	_	_						01.06.14	02.10.13	
12	12135173	KIT PORTAMANDO 201 ACE	CONTROL PANEL 201 ACE	1	_	_							01.06.14	
12	12043844	PANEL PORTAMANDOS APE 201	CONTROL PANEL APE 201	_	1	1						01.06.14	02.10.13	
12	12135172	KIT PORTAMANDO 201 ADV-PL.	CONTROL PANEL 201 ADV-PL.	_	1	1							01.06.14	
13	12041157	PANEL EXT. IZQUIERDO 201 ADV	REAR LEFT PANEL 201 ADV	1	1	1								

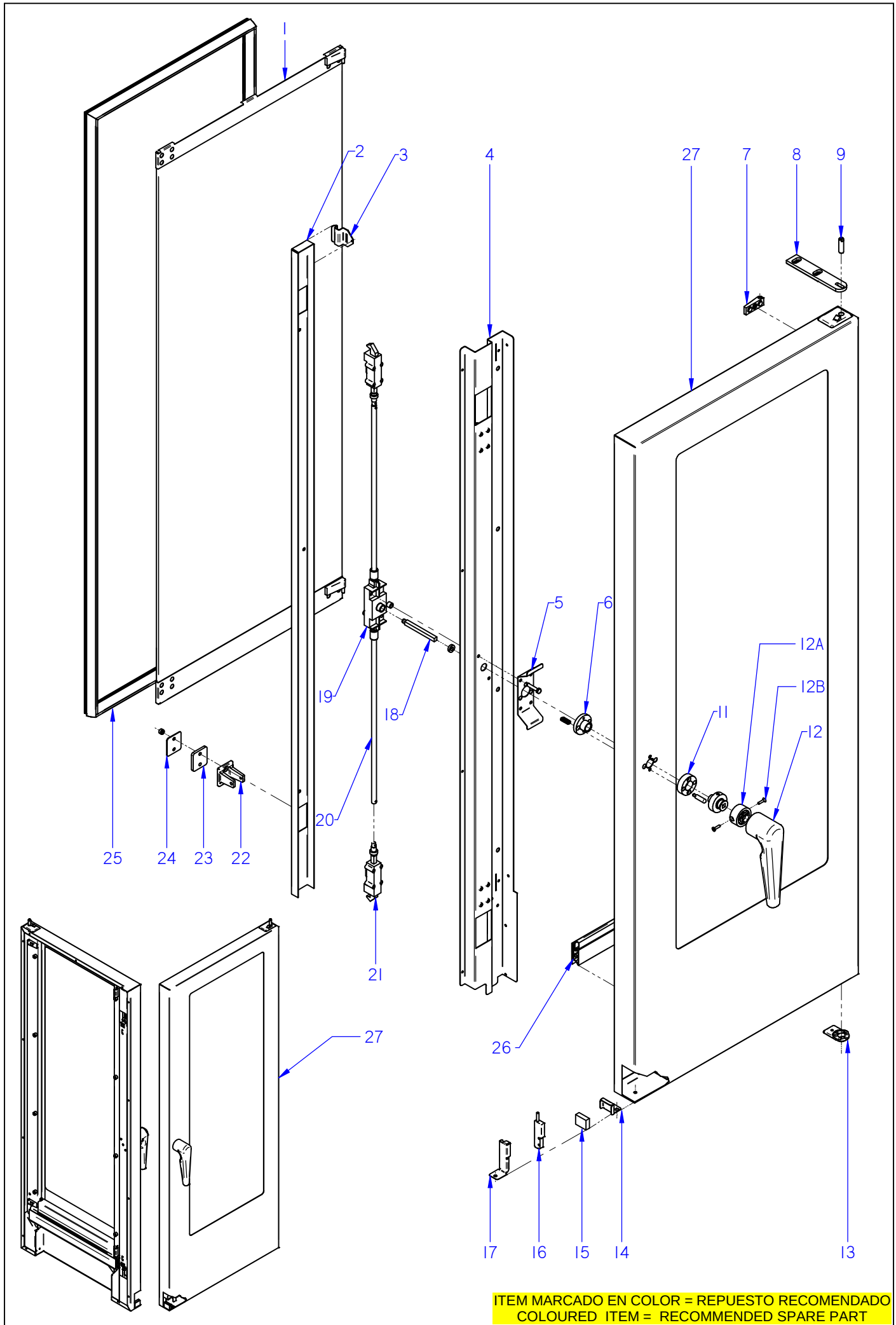

ITEM MARCADO EN COLOR = REPUESTO RECOMENDADO
COLOURED ITEM = RECOMMENDED SPARE PART

Nº plano / N º plane	Firma	Fecha / Date	Denominación / Denomination: PUERTA / DOOR	Lamina / Sheet	
C-3073		2012-09	HORNOS AG; ACG; APG-201	2	Fagor Industrial S.Coop. FAGOR Oñate

MOD.	HORNOS / OVEN	ZONA / ZONE	PUERTA (HASTA 06-2014) / DOOR (UNTIL 06-2014)	PLANO DIAGRAM	C-3073

ITEM	CODIGO REFERENCE	DENOMINACION	DENOMINATION	ACG-201	AG-201	APG-201					RECOMEND.	ELIMINADO ELIMINATED	INTRODUCID. INTRODUCED	NOTAS
1	**12041083**	**KIT CRISTAL INTER. 201**	**201 INNER GLASS KIT**	**1**	**1**	**1**								
2	12039324	TAPA CIERRE PUERTA 202	DOOR CLOSING COVER 202	1	1	1								
3	12024319	PESTILLO	INNER GLASS HINGE	2	2	2								
4	12039302	CONTRAPUERTA MANILLA 202	COMPLETE HANDLE DOOR 202	1	1	1								
5	12039326	SUPLEMENTO SUJ. CERRADURA	LOCK FIXING SUPPLEMENT	1	1	1								
6	12024389	GUIA MANILLA	HANDLE GUIDE	1	1	1								
7	12024402	BASE DE BISAGRA	HINGE BASE	2	2	2								
8	12039312	BISAGRA SUPERIOR	UPPER HINGE	1	1	1								
9	12023636	EJE SUPERIOR	UPPER SHAFT	1	1	1								
11	12024505	SOPORTE RESORTE	SPRING HOLDER	1	1	1								
12	12044776	ASA COMPLETA 2/1 ADVANCE	HANDLE 2/1 ADVANCE	1	1	1								
12A	12102288	INSERTO AMARRE	FASTENING INSERT	1	1	1							09,06,15	
12B	12010262	TORNILLO AVELLANADO M4X15	COUNTERSUNK SCREW M4x15	2	2	2							09,06,15	
13	12039311	BASE BISAGRA INFERIOR PUERTA	LOWER DOOR HINGE BASE	1	1	1						02.09.13		
13	12047967	BASE BISAGRA INFERIOR 6 DIEN	LOWER HINGE BASE	1	1	1							02.09.13	
14	12022049	SOPORTE IMAN	MAGNET HOLDER	1	1	1								
15	12024384	IMAN	MAGNET	1	1	1								
16	12024560	INTERRUPTOR MAGNETICO AC	MAGNETIC SWITCH AC	1	1	1								
17	12022166	SOPORTE MICRO PUERTA	DOOR MICRO SWITCH	1	1	1								
18	12024799	EJE DE MANILLA PUERTA	LEVER SHAFT	1	1	1								
19	12024673	MECANISMO CIERRE	CLOSING MECHANISM	1	1	1								
20	12039308	TUBO ALARGADERA 201/202 ADV	ROD 201/202 ADV	2	2	2								
21	12024657	ELEMENTO CIERRE	CLOSING COMPONENT	2	2	2								
22	12024495	ENGANCHE PUERTA	FASTENER	2	2	2								
23	12024380	SUPLEMENTO ENGANCHE	FASTENER SUPPLEMENT	2	2	2								
24	12022138	CALZO DE ENGANCHE	COUPLING CHOCK	4	4	4								
25	12041134	JUNTA PUERTA COMPL.201 ADV	DOOR JOINT 201 ADV	1	1	1								
26	12041088	JUNTA CIERRE INFERIOR 201	LOWER LOCK JOINT 201	1	1	1								
27	**12046022**	**KIT PUERTA 201**	**DOOR 201 KIT**	**1**	**1**	**1**								

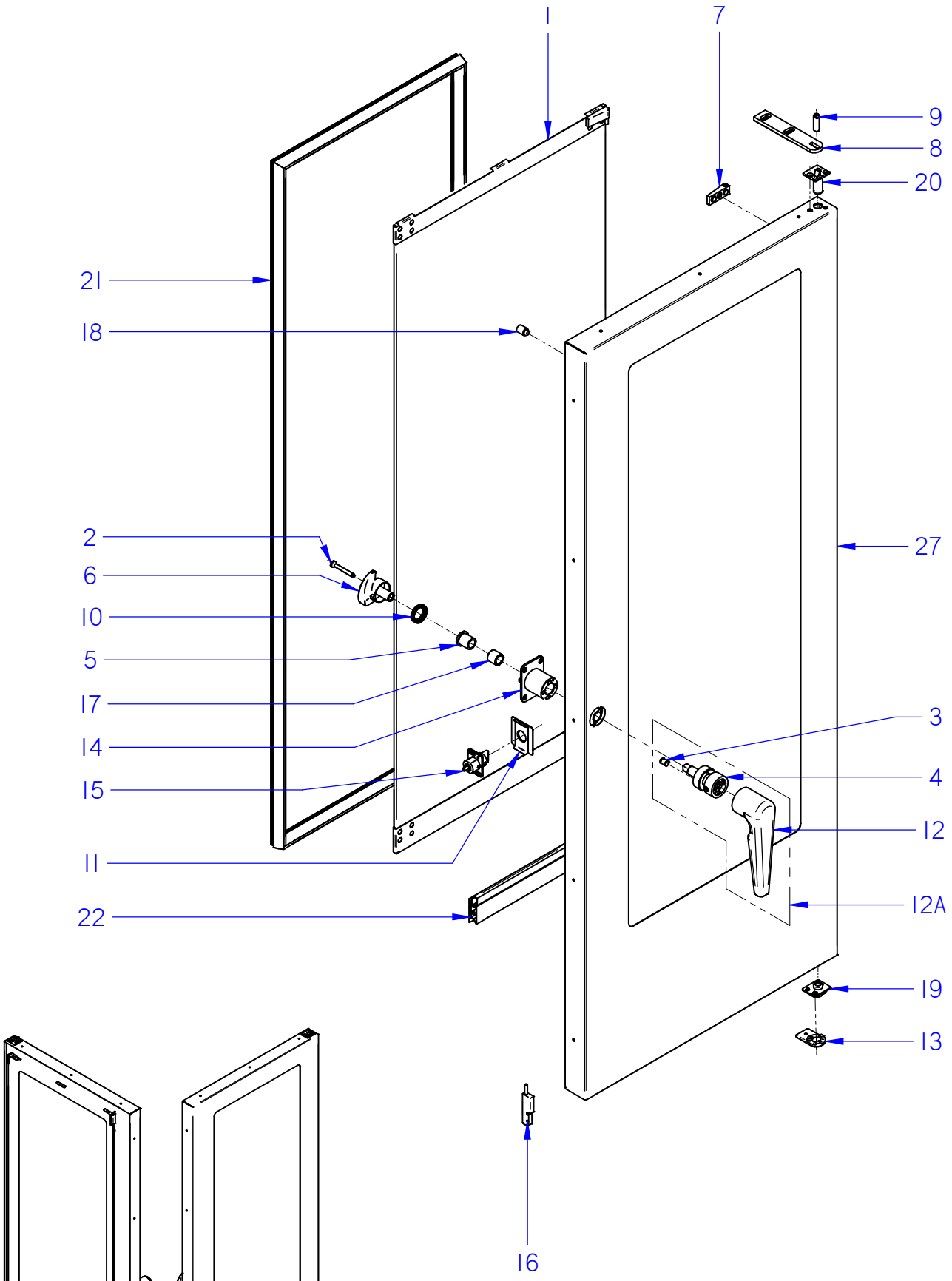

ITEM MARCADO EN COLOR = REPUESTO RECOMENDADO
COLOURED ITEM = RECOMMENDED SPARE PART

Nº plano / Drawing N.	Firma / Signature	Fecha / Date	Denominación / Denomination: PUERTA / DOOR	Lamina / Sheet	
C-3073-14	Iban R.	03-2016	HORNOS AG; ACG; APG-201	2-14	Fagor Industrial S.Coop. Oñate FAGOR

MOD.	HORNOS / OVEN	ZONA / ZONE	PUERTA (DESDE 06-2014) / DOOR (FROM 06-2014)	PLANO DIAGRAM	C-3073-14

ITEM	CODIGO REFERENCE	DENOMINACION	DENOMINATION	ACG-201	AG-201	APG-201					RECOMEND.	ELIMINADO ELIMINATED	INTRODUCID. INTRODUCED	NOTAS / NOTES
1	**12041083**	**KIT CRISTAL INTER. 201**	**201 INNER GLASS KIT**	**1**	**1**	**1**					X			
2	12097552	TORNILLO AVELLANADO M6x50	COUNTERSAUNK SCREW M6x50	1	1	1								
3	12049719	POSICIONADOR DE BOLA MUELLE	BALL-SPRING FIXER	1	1	1								
4	12131277	KIT INSERTOS ASA 20X	KIT HANDLE INSERTS 20X	1	1	1								
5	12025100	CASQUILLO SELFOIL 16-22-25	SELFOIL BUSHING 16-22-25	1	1	1								
6	12049692	LEVA CIERRE UNICO 20X ADV	SINGLE LOCK CAM 20X ADV	1	1	1								
7	12024402	BASE DE BISAGRA	HINGE BASE	2	2	2								
8	12039312	BISAGRA SUPERIOR	UPPER HINGE	1	1	1					X			
9	12023636	EJE SUPERIOR	UPPER SHAFT	1	1	1								
10	12093685	MUELLE LEVA PUERTA ADVANCE	CAM SPRING ADVANCE DOOR	1	1	1								
11	12094299	TAPA PESTILLO PUERTA COMPLETA	COMPL. DOOR BOLT COVER	1	1	1								
12	12044773	ASA ADVANCE	ADVANCE HANDLE	1	1	1								
12A	12135274	REP. ASA COMP. 20X CIERRE UNICO	SPARE SINGLE LOCK 20X HANDLE	1	1	1					X			
13	12047967	BASE BISAGRA INFERIOR 6 DIEN	LOWER HINGE BASE	1	1	1					X			
14	12049691	SOPORTE MANILLA 20X	20X HANDLE SUPPORT	1	1	1								
15	12113376	MOD PITON PUERTA	DOOR BOLT MODULE	1	1	1								
16	12024560	INTERRUPTOR MAGNETICO AC	MAGNETIC SWITCH AC	1	1	1								
17	12097533	CASQUILLO SELFOIL TIPOA 16-22-20	SELFOIL BUSHING 16-22-20	1	1	1								
18	12024794	TOPE CRISTAL INTERIOR	INNER GLASS BLOCK	9	9	9								
19	12049660	BISAGRA INF. 202 ADV 6 DIENTES	LOWER HINGE 202 ADV. 6 TEETH	1	1	1								
20	12049282	BISAGRA SUP. 202 TOPE ALTO	TOP HINGE 202	1	1	1								
21	12041134	JUNTA PUERTA COMPL.201 ADV	DOOR JOINT 201 ADV	1	1	1					X			
22	12041088	JUNTA CIERRE INFERIOR 201	LOWER LOCK JOINT 201	1	1	1					X			
23	**12097686**	**KIT PUERTA 201 CIERRE UNICO**	**SINGLE LOCK DOOR 201 KIT**	**1**	**1**	**1**					X			

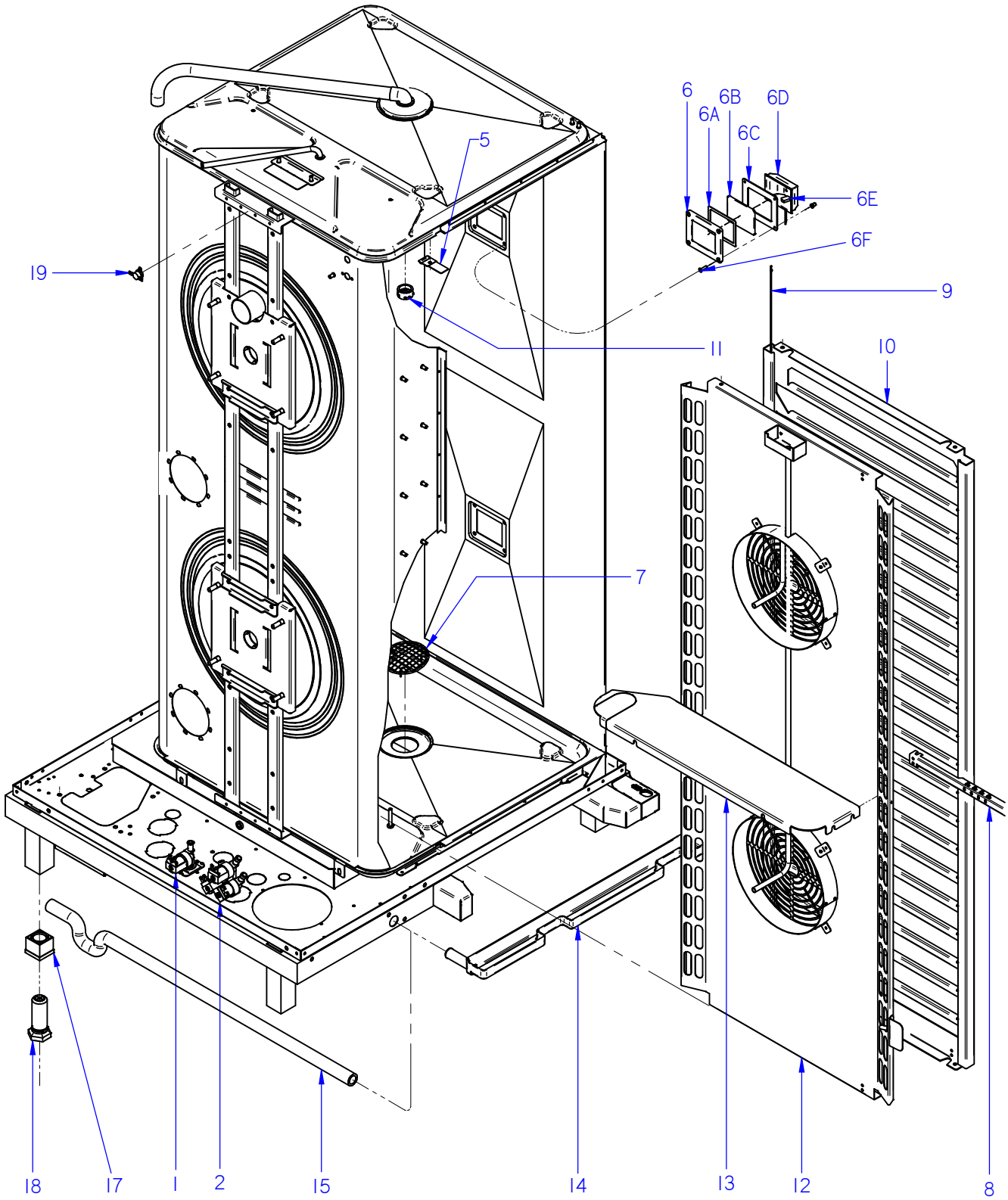

ITEM MARCADO EN COLOR = REPUESTO RECOMENDADO
COLOURED ITEM = RECOMMENDED SPARE PART

Nº plano / N º plane	Firma	Fecha / Date	Denominación / Denomination: MUEBLE INTERIOR / INTERIOR OVEN	Lamina / Sheet	
C-3074	Iban R.	03-2015	HORNOS AG; ACG; APG-201	3	Fagor Industrial S.Coop. FAGOR Oñate

MOD.	HORNOS / OVEN	ZONA / ZONE	MUEBLE INTERIOR / INTERIOR OVEN	PLANO DIAGRAM	C-3074

ITEM	CODIGO REFERENCE	DENOMINACION	DENOMINATION	ACG-201	AG-201	APG-201					RECOMEND.	ELIMINADO ELIMINATED	INTRODUCID. INTRODUCED	NOTAS
1	12025161	E.V. 230VAC 50/60Hz 1V	SOLENOID VALVE 230VAC 1 W	1		1					X			
2	12023794	E.V. 230VAC 50/60Hz 2V	SOLENOID VALVE 230VAC 2 W	1	1	_					X		01,01,16	
2	12115418	E.V. 230VAC 50/60Hz 3V	SOLENOID VALVE 230VAC 3 W	_	1	1					X			
5	12041767	SOPORTE SONDA PINCHO CAMARA	CAMERA PROBE SUPP. PINCHO	1	1	1						14,02,13		
6	12024464	MARCO LAMPARA	LAMP ANCHORING PLATEN	2	2	2								
6A	12023532	JUNTA INTERIOR LAMPARA	LAMP INNER JOINT	2	2	2								
6B	12023668	CRISTAL LAMPARA	LAMP GLASS	2	2	2								
6C	12023578	JUNTA EXTERIOR LAMPARA	LAMP OUTER JOINT	2	2	2								
6D	12024545	PORTALAMPARAS	LAMP HOLDER	2	2	2								
6E	12025123	LAMPARA 10W-12V	LIGHT 10W 12V	2	2	2								
6F	12010262	TORNILLO AVELLANADO M4X15	COUNTERSUNK SCREW M.4x15	8	8	8								
7	12020331	FILTRO DESAGÜE 201	DRAINAGE FILTER 201	1	1	1						15.09.13		
7	12095042	FILTRO DESAGÜE Ø53	DRAINAGE FILTER Ø53	1	1	1							15.09.13	
8	**12126827**	**SOPORTE CORE HOLDER**	**CORE HOLDER SUPPORT**	**1**	_	_								
9	12039490	TOPE BANDEJAS 101-102	TRAY TOP 101-102	4	_	_								
10	**12126823**	**PORTABANDEJAS IZDA 201 ACG**	**ACG 201 LEFT HOLDER**	**1**	_	_								
10	**12126822**	**PORTABANDEJAS DCHA 201 ACG**	**ACG 201 RIGHT HOLDER**	**1**	_	_								
11	12023935	PUNTA DIFUSORA LAVADO	WASHING DISPENSER POINT	_	_	1								
11	12129275	PUNTA DIFUSORA ACLARADO	RINSING DISPENSER POINT	1	1	_							01,01,16	
12	**12126836**	**CUBREVENTILADOR 201 ADV**	**FAN COVER 201 ADV**	**1**	_	_								
12	**12126837**	**CUBREVENTILADOR 201 ADV**	**FAN COVER 201 ADV**	_	**1**	**1**								
13	12041119	CHAPA REFUERZO CUBA AE 201	CUBA REINFOR. PLATE AE 201	1	1	1								
14	12039467	RECOGEAGUAS HORNO 201	SPRING WATER COLLE. 201	1	_	_								
15	12039498	TUBO RECOGEAGUAS 101	COLLECT WATER PIPE 101	1	_	_								
	12009628	ABRAZADERA ELAST. 26.7-28.1	SPRING CLAMP 26.7-28.1	2	_	_								
17	12043392	TUERCA PATA 202 ADVANCE	NUT LEG 202 ADVANCE	4	4	4								
18	12043393	TORNILLO PATA 202 ADVANCE	SCREW LEG 202 ADVANCE	4	4	4								
19	12095019	TERMOSTATO_261_NA_51ºC	THERMOSTAT_261_NA_51ºC	1	1	_					X		01,01,16	

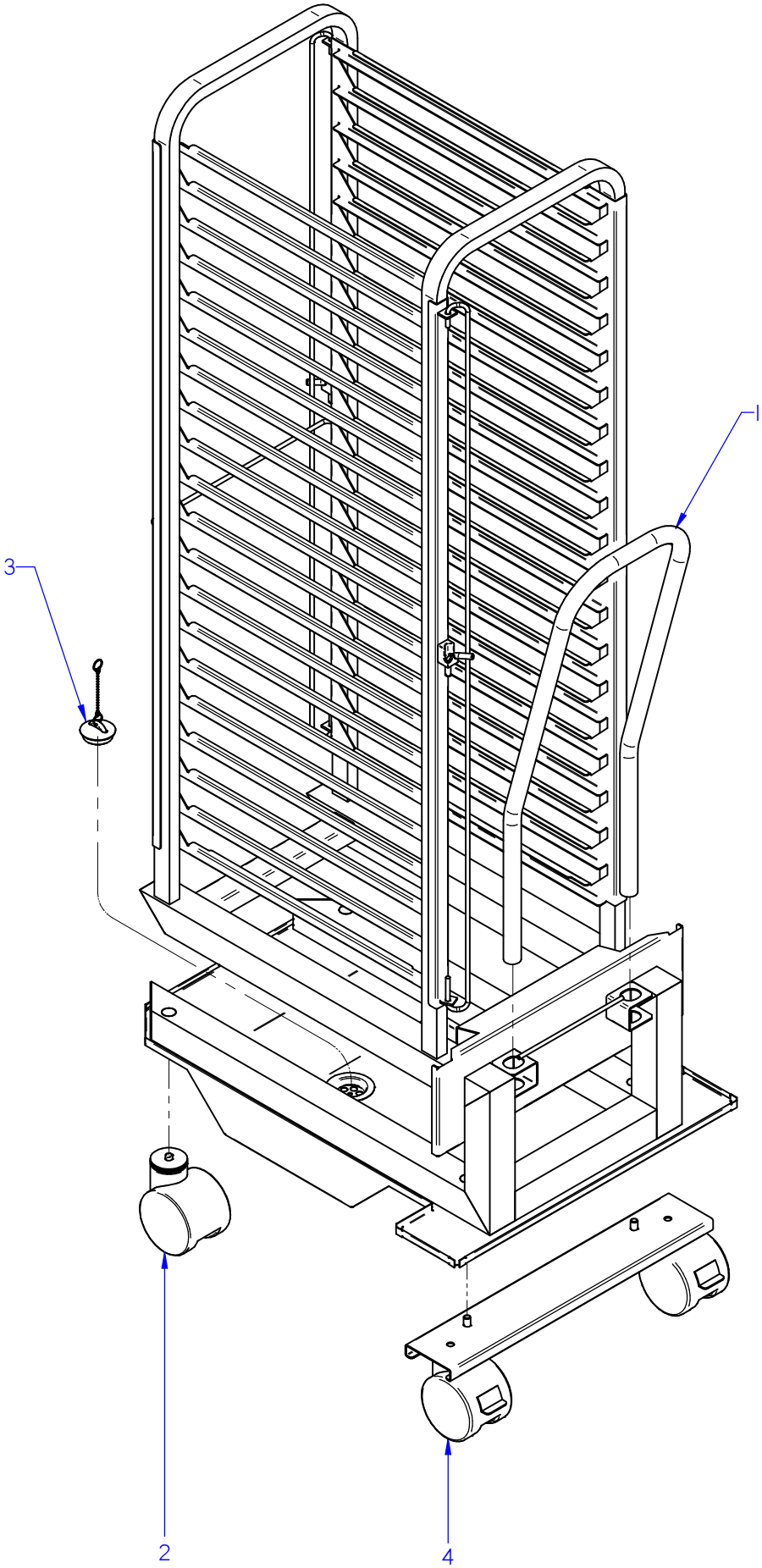

ITEM MARCADO EN COLOR = REPUESTO RECOMENDADO
COLOURED ITEM = RECOMMENDED SPARE PART

Nº plano / N º plane	Firma	Fecha / Date	Denominación / Denomination: CARRO / TROLLEY	Lamina / Sheet	
C-3075	Iban R.	06-2015	HORNOS AG; APG-201	4	Fagor Industrial S.Coop. FAGOR Oñate

MOD.	HORNOS / OVEN	ZONA / ZONE	CARRO / TROLLEY	PLANO DIAGRAM	C-3075

ITEM	CODIGO REFERENCE	DENOMINACION	DENOMINATION	AG-201	APG-201						RECOMEND.	ELIMINADO ELIMINATED	INTRODUCID. INTRODUCED	NOTAS
	12041135	**CARRO 201 ADVANCE**	**TROLLEY 201 ADVANCE**	**1**	**1**									
1	12041148	ASA COMPLETA CARRO 201 ADV	HANDLE FULL 201 ADV	1	1									
2	12045315	RUEDA GIRATORIA SIN FRENO	SWIVEL WHEEL WITHOUT BR.	2	2									
3	12024275	TAPON Ø44	CAP Ø44	1	1									
4	**12045312**	**KIT RUEDA GIRATORIA CON FRENO**	**SWIVEL WHEEL WITH BRAKE KIT**	**1**	**1**									

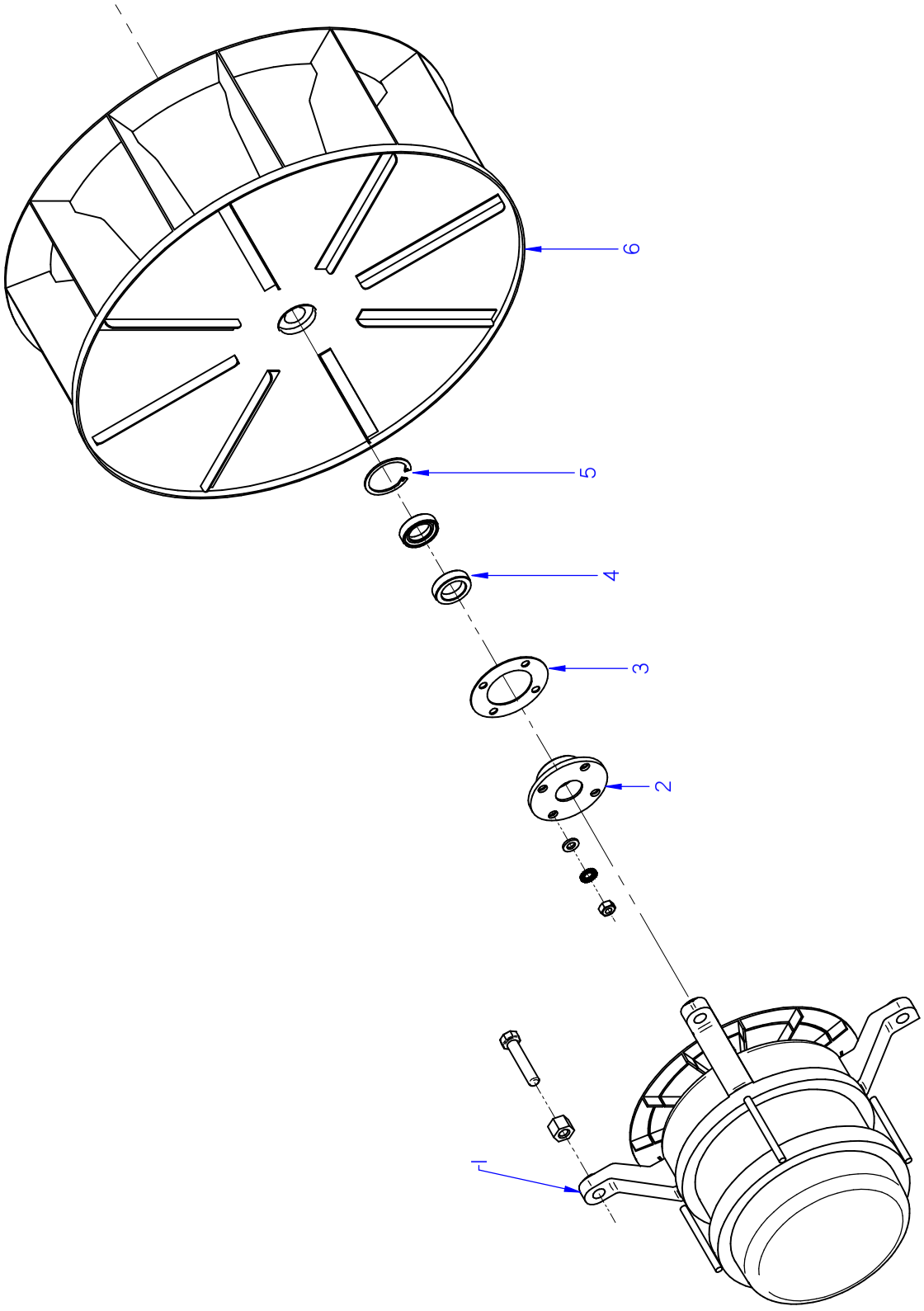

ITEM MARCADO EN COLOR = REPUESTO RECOMENDADO
COLOURED ITEM = RECOMMENDED SPARE PART

Nº plano / N º plane	Firma	Fecha / Date	Denominación / Denomination: TURBINA / TURBINE	Lamina / Sheet	
C-3076		2012-09	HORNOS AG; ACG; APG-201	5	Fagor Industrial S.Coop. FAGOR Oñate

MOD.	HORNOS / OVEN	ZONA / ZONE	TURBINA / TURBINE	PLANO DIAGRAM	C-3076

ITEM	CODIGO REFERENCE	DENOMINACION	DENOMINATION	ACG-201	AG-201	APG-201					RECOMEND.	ELIMINADO ELIMINATED	INTRODUCID. INTRODUCED	NOTAS
1	12024325	MOTOR 230V AC 3N650KW 1450RPM	MOTOR 230V AC 3N650KW 1450	2	2	2					X			
S/Nº	12023560	DISTANCIADOR MOTOR 10/21	SPACER MOTOR 10/21	8	8	8								
2	12024742	CASQUILLO RETEN 10/21	SEAL BUSHING 10/21	2	2	2								
3	12024221	JUNTA CASQUILLO RETEN	SEAL BUSHING GASKET	2	2	2								
4	12024510	RETEN 17X28X7V	RETAINER 28x17x7	4	4	4					X			
5	12010122	ANILLO DE SEGURIDAD Ø 28X1.2	SAFETY RING 28x1,2	2	2	2					X			
6	12024306	TURBINA RECTA Ø350X127 HANN.	TURBINE RECTA Ø350X127 HAN	2	2	2					X			

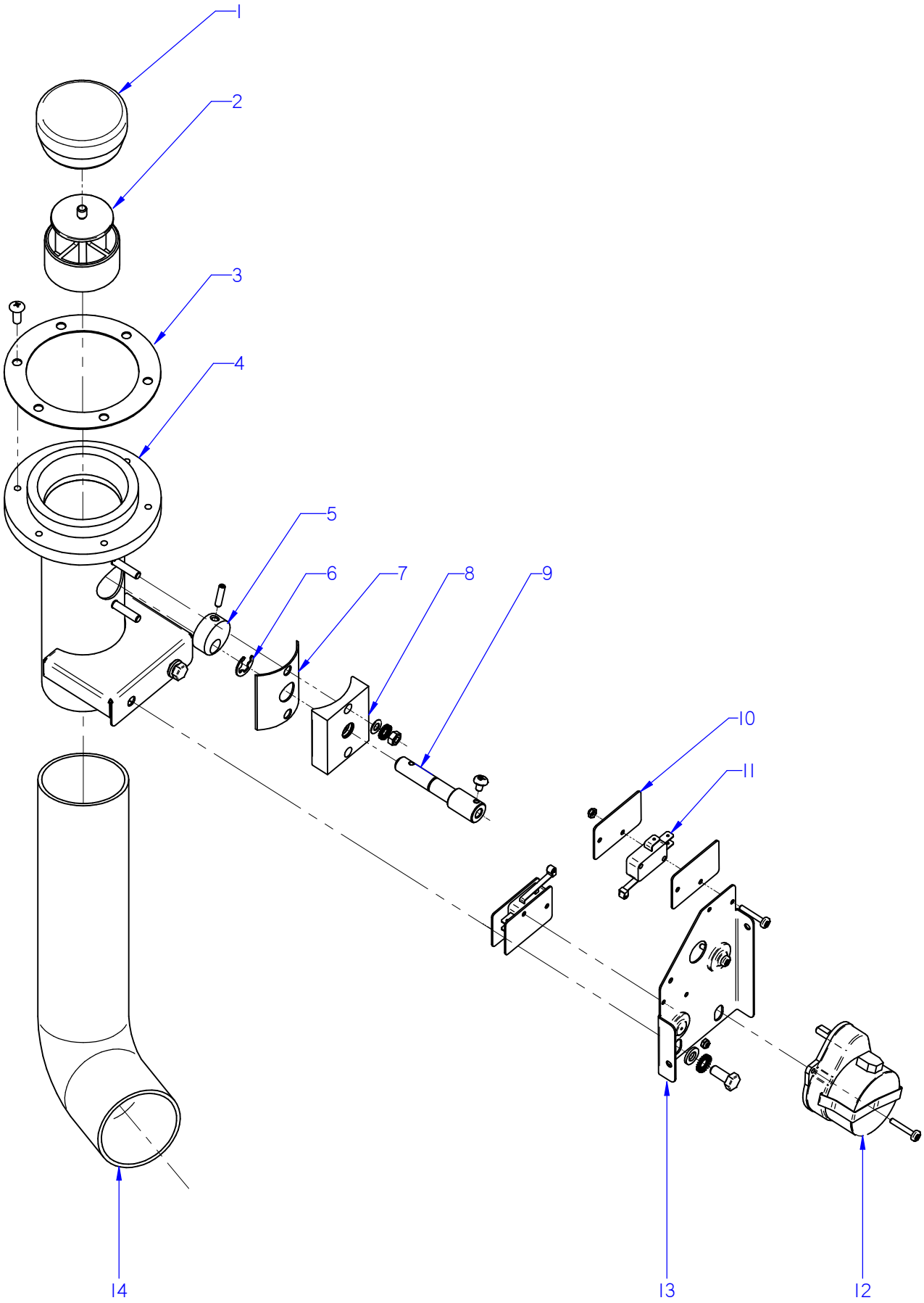

ITEM MARCADO EN COLOR = REPUESTO RECOMENDADO
COLOURED ITEM = RECOMMENDED SPARE PART

Nº plano / N º plane	Firma	Fecha / Date	Denominación / Denomination: CHIMENEA / FLUEPIPE	Lamina / Sheet	
C-3077		2012-09	HORNOS AG; ACG; APG-201	6	Fagor Industrial S.Coop. Oñate FAGOR

MOD.	HORNOS / OVEN	ZONA / ZONE	CHIMENEA / FLUEPIPE	PLANO DIAGRAM	C-3077

ITEM	CODIGO REFERENCE	DENOMINACION	DENOMINATION	ACG-201	AG-201	APG-201					RECOMEND.	ELIMINADO ELIMINATED	INTRODUCID. INTRODUCED	NOTAS
1	12024520	RETENCION DE VAPORES	CLOSE CHIMNEY	1	1	1								
2	12024500	GUIA RETENCION VAPORES	STEAM RETAINER GUIDE	1	1	1								
3	12023576	JUNTA BASE CHIMENEA	FLUEPIPE BASE SEAL	1	1	1								
S/Nº	12095516	JUNTA TORICA 5x1	O-RING 5x1	6	6	6							17.10.13	
4	12022868	CONJUNTO CHIMENEA	COMPLETE CHIMNEY	1	1	1						01.05.14		
4	12104226	CONJUNTO CHIMENEA	COMPLETE CHIMNEY	1	1	1							01.05.14	
5	12024328	LEVA EJE CHIMENEA	FLUEPIPE SHAFT CAM	1	1	1								
6	12010014	ARANDELA DE SEGURIDAD Ø8	SAFETY WASHER Ø8	1	1	1								
7	12023497	JUNTA EJE CHIMENEA	FLUEPIPE SHAFT SEAL	1	1	1								
8	12024436	GUIA EJE CHIMENEA	FLUEPIPE SHAFT GUIDE	1	1	1						01.05.14		
8	12098396	GUIA EJE CHIMENEA	FLUEPIPE SHAFT GUIDE	1	1	1							01.05.14	
S/Nº	12010274	JUNTA TORICA 9.19x2.62	O-RING 9.19x2.62	1	1	1							01.03.13	
9	12024435	EJE CHIMENEA ELECTRICA	ELECTRIC FLUEPIPE SHAFT	1	1	1						01.05.14		
9	12104228	EJE CHIMENEA ELECTRICA	ELECTRIC FLUEPIPE SHAFT	1	1	1							01.05.14	
10	12009985	PLACA SEPARADORA	SPACER PLATE	4	4	4								
11	12025193	INTERRUPTOR PUERTA	DOOR SWITCH	2	2	2					X			
12	12024638	MOTOR CHIMENEA	FLUEPIPE MOTOR	1	1	1					X			
13	12022146	ESCUA. AMARRE MOTOR CHIMEN.	FLUEPIPE MOTOR FASTENING BRAC	1	1	1								
14	12024122	TUBO FLEXIBLE Ø53X360	FLEXIBLE TUBE Ø53X360	1	1	1					X			
	12009962	ABRAZADERA 40*60	CLAMP 40*60	2	2	2								

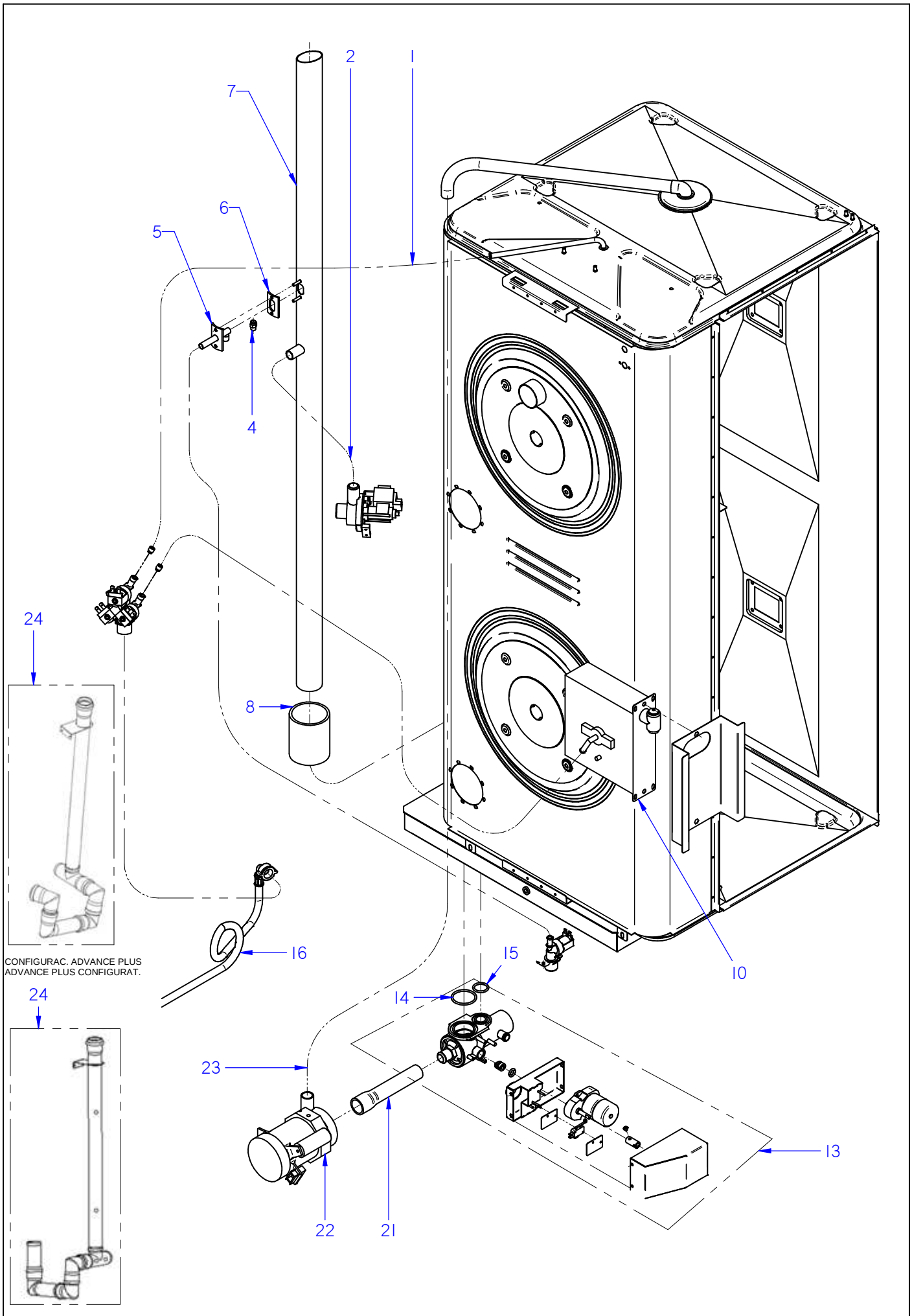

CONFIGURAC. ADVANCE PLUS
ADVANCE PLUS CONFIGURAT.

CONFIGURAC. ADVANCE / CONCEPT
ADVANCE / CONCEPT CONFIGURAT.

ITEM MARCADO EN COLOR = REPUESTO RECOMENDADO
COLOURED ITEM = RECOMMENDED SPARE PART

Nº plano / N º plane	Firma	Fecha / Date	Denominación / Denomination: CONDUCCIONES DE AGUA / WATER PIPES	Lamina / Sheet	
C-3078	Iban R.	03-2016	HORNOS AG; ACG; APG-201	7	Fagor Industrial S.Coop. Oñate FAGOR

MOD.	HORNOS / OVEN	ZONA / ZONE	CONDUCCIONES DE AGUA / WATER PIPES	PLANO DIAGRAM	C-3078

ITEM	CODIGO REFERENCE	DENOMINACION	DENOMINATION	ACG-201	AG-201	APG-201					RECOMEND.	ELIMINADO ELIMINATED	INTRODUCID. INTRODUCED	NOTAS
1	11000083	T. GOMA NEGRA Ø17*10	BLACK RUBBER PIPE Ø17*10	3	3	3								
	12010036	ABRAZADERA 12*20	CLAMP 12-20	6	10	8								
2	11000157	TUBO SILIC. ALTA Tª D26*18	HIGH TEMP. SILIC. HOSE D26*18	_	2	2								
	12009628	ABRAZAD. ELASTICA 26,7*28,1	ELAST. CLAMP 26,7*28,1	_	1	1								
4	12024000	TOBERA 1/8	NOZZLE 1/8	1	1	1						31.03.13		
4	12049131	BOQUILLA 1/8M-B-1-3	INJECTOR 1/8M-B-1-3	1	1	1							31.03.13	
5	12039468	CONDUCC. VAHOS COMPLETO	COMPLETE VAPOUR DUCT	1	1	1								
6	12023605	JUNTA TUBO INYECTOR	INJECTOR PIPE SEAL	1	1	1								
7	12043995	CHIMENEA COMPLETA 201 ACE	COMPL. FLUEPIPE 201 ACE	1	_	_								
7	12041127	CHIMENEA COMPLETA 201 ADV	COMPLET FLUEPIPE 201 ADV	_	1	1								
8	12047901	EMPALME SILICONA Ø53	SILICONE JOINT Ø53	1	1	1								
	12007943	ABRAZADERA ELASTICA 62*66	ELAST. CLAMP 62*66	2	2	2								
10	12040977	DUCHA	SHOWER	_	1	1								
13	**12126816**	**KIT VALVULA DESAGUE ADVAN.**	**VALVE DRAIN ADVANCE KIT**	_	_	**1**					X		**12.07.13**	
14	12010081	JUNTA TORICA Ø52X3,5	O-RING Ø52X3.5	_	_	1								
15	12010131	JUNTA TORICA Ø33x3,5	O-RING Ø33x3.5	_	_	1								
16	12025198	MANGUERA ENTRADA AGUA	WATER INLET HOSE	1	1	1								
21	12024407	GOMA VALVULA BOMBA GAS	PUMP VALVE RUBBER	_	_	1								
	12010023	ABRAZADERA 20-32	CLAMP 20-32	_	_	1								
	12009997	ABRAZADERA 25-40	CLAMP 25-40	_	_	1								
22	12024782	MOTOBOMBA 230V AC 1N 50Hz	MOTOR 230V AC 1N 50Hz 74,6	_	_	1					X			
S/Nº	12024463	CONDENSADOR ELEC. 250V VDE	CONDENSER ELEC. 250V VDE	1	1	1								
23	11000005	TUBO SILIC. ALTA Tª D31*23	HIGH TEMP. SILIC. HOSE D31*23	_	_	2								
24	12047404	MOD CONJUNTO DESAGUE ADV	ADV DRAIN SET MODEL	1	1	1								

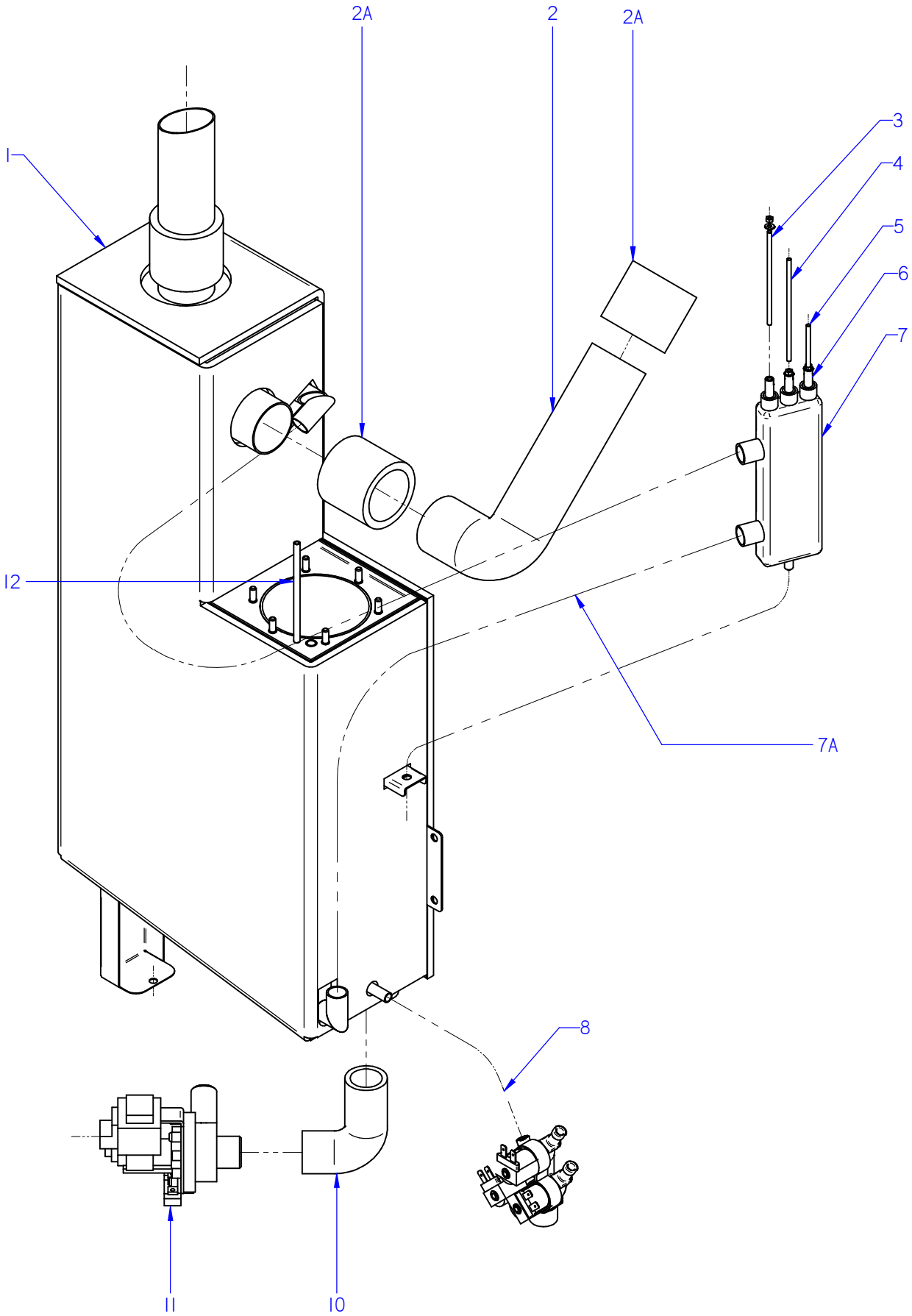

ITEM MARCADO EN COLOR = REPUESTO RECOMENDADO
COLOURED ITEM = RECOMMENDED SPARE PART

Nº plano / N º plane	Firma	Fecha / Date	Denominación / Denomination: CIRCUITO DE VAPOR / STEAM CIRCUIT	Lamina / Sheet	
C-3079		04-2016	HORNOS AG; APG-201	8	Fagor Industrial S.Coop. Oñate

MOD.	HORNOS / OVEN	ZONA / ZONE	CIRCUITO DE VAPOR / STEAM CIRCUIT	PLANO DIAGRAM	C-3079

ITEM	CODIGO REFERENCE	DENOMINACION	DENOMINATION	AG-201	APG-201						RECOMEND.	ELIMINADO ELIMINATED	INTRODUCID. INTRODUCED	NOTAS
1	**12046107**	**KIT GENERADOR VAPOR 201**	**STEAM GENERATOR 201 KIT**	**1**	**1**						X			
2	12041855	TUBO FLEXIBLE Ø53X360 VARILLA	FLEXIBLE TUBE Ø53X360	1	1							01.01.13		
2	12047890	EMPALME GENERADOR AG 201	GENERATOR JOINT AG 201	1	1								01.01.13	
2A	12047901	EMPALME SILICONA Ø53	SILICONE JOINT Ø53	2	2								01.01.13	
	12009962	ABRAZADERA 40-60	CLAMP 40-60	2	2									
3	12023573	ELECTRODO ALTO	HIGH LEVEL ELECTRODE	1	1						X			
4	12023574	ELECTRODO BAJO	LOW LEVEL ELECTRODE	1	1						X			
5	12023575	ELECTRODO DE MASA	EARTH ELECTRODE	1	1						X			
6	12024460	GUIA AISLANTE	INSULATION GUIDE	3	3									
7	12024419	BOTE DE NIVELES	LEVELS VESSEL	1	1							02.06.14		
7	12113061	BOTE DE NIVELES	LEVELS VESSEL	1	1								02.06.14	
7A	11000157	TUBO SILICONA Tº Ø 26*18	HIGH SILICON PIPE Tº Ø 26*18	2	2									
	12009628	ABRAZADERA ELASTICA 26,7*28,1	ELAST. CLAMP 26,7*28,1	4	4									
8	11000083	T. GOMA NEGRA Ø17*10	BLACK RUBBER PIPE Ø17*10	1	1									
	12010036	ABRAZADERA 12*20	CLAMP 12-20	2	2									
10	12039649	TUBO DESAGÜE GENERADOR	DRAIN TUBE GENERATOR	1	1									
	12009997	ABRAZADERA 25-40	CLAMP 25-40	2	2									
11	12039546	MOTOBOMBA 230V AC 1N 50/60Hz	PUMP 230V AC 50/60Hz 30W 1N	1	1						X			
12	12023901	CONJUN. TERMOPAR VAPOR	STEAM THERMOCOUPLE UNIT	1	1						X			

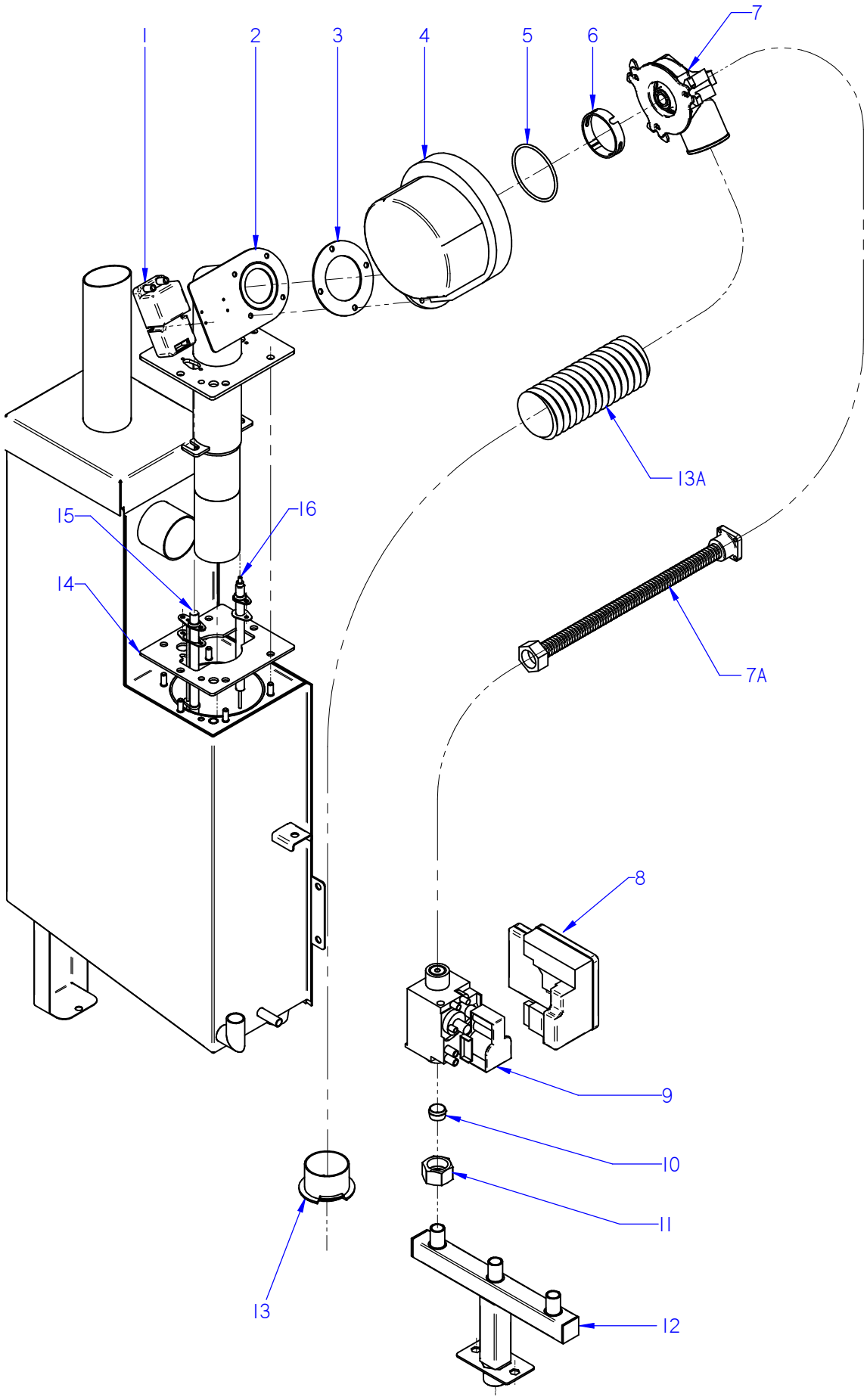

ITEM MARCADO EN COLOR = REPUESTO RECOMENDADO
COLOURED ITEM = RECOMMENDED SPARE PART

Nº plano / N º plane	Firma / Signature	Fecha / Date	Denominación / Denomination: FUNC. GAS GENERADOR / FUNCT. GAS GENERATOR	Lamina / Sheet	
C-3080	Iban R.	2014-09	HORNOS AG; APG-201	9	Fagor Industrial S.Coop. FAGOR Oñate

MOD.	HORNOS / OVEN	ZONA / ZONE	FUNCIONAL GAS GENERADOR FUNCTIONAL GAS GENERATOR	PLANO DIAGRAM	C-3080

ITEM	CODIGO REFERENCE	DENOMINACION	DENOMINATION	AG-201	APG-201						RECOMEND.	ELIMINADO ELIMINATED	INTRODUCID. INTRODUCED	NOTAS
1	12039544	CHISPA BRAHMA	BRAHMA SPARK	1	1						X			
2	12044424	QUEMADOR GENERADOR 201G	BURNER GENERATOR 201G	1	1						X			
3	12045252	JUNTA ACOP.SOPLANTE GRAFITO	JOINT COU. GRAPHITE BLOWER	1	1									
4	12044607	SOPLANTE NRG 118 55kw	BLOWER NRG 118 55kw	1	1						X			
5	12009940	JUNTA TORICA114x3	O-RING 114x3	1	1									
6	12044292	ARO VENTURI VERDE	GREEN RING VENTURI	1	1									
7	12039540	MIXER COMPLETO	MIXER COMPLETE	1	1						X			
S/Nº	12041612	JUNTA TORICA 63X3	O-RING 63X3	1	1									
7A	12040731	TUBO GAS FLEXIBLE 900-90º	FLEXIBLE GAS PIPE 900-90º	1	1									
8	12039440	CAJA CONTROL DBC 579	DBC CONTROL BOX 579	1	1						X			
9	12046364	VALVULA REGUL 50HZ ADV	ADV 50HZ VALVE CONTROLL.	1	1						X			
9	12046365	VALVULA REGUL 60HZ ADV	ADV 60HZ VALVE CONTROLL.	1	1						X			
10	12045672	TOBERA Ø 5,4 BP	NOZZLE Ø 5,4 BP	1	1									
10	_____	GN (SIN INYECTOR)	(WITHOUT INJECTOR)GN	1	1									
11	12048850	TUERCA G 3/4	NUT G 3/4	1	1									
12	12041051	ENTRADA GAS CO. ADV 202 SUB	ADV GAS INLET ADV 202 SUB	1	1									
S/Nº	12008775	BICONO Ø16	BICONE Ø16	1	1									
13	12039679	AMARRE TUBOS AIRE	MOORING PIPES AIR	1	1									
13A	11000232	TUBO AIRE VULCANO PUZ 50	AIR TUBE VULCANO PUZ 50	1	1									
14	12044286	JUNTA QUEMADOR GENERA 102	GENERATOR GASKET BURNER	1	1									
15	12039430	BUJIA GENERADOR 202	PLUG GENERATOR 202	1	1						X			
S/Nº	12039587	JUNTA BUJIA GENERADOR 06/101	PLUG BOARD GENERATOR 06/101	1	1									
	12010244	TUERCA EXAGONAL M4 LATON	HEXAGONAL NUT M4 BRASS	2	2									
16	12039431	DETECTOR GENERADOR 202	GENERATOR SENSOR 202	1	1						X			
S/Nº	12039450	JUNTA BUJIA CONVECCION 102	SPARK CONVECTI. BOARD 102	1	1									

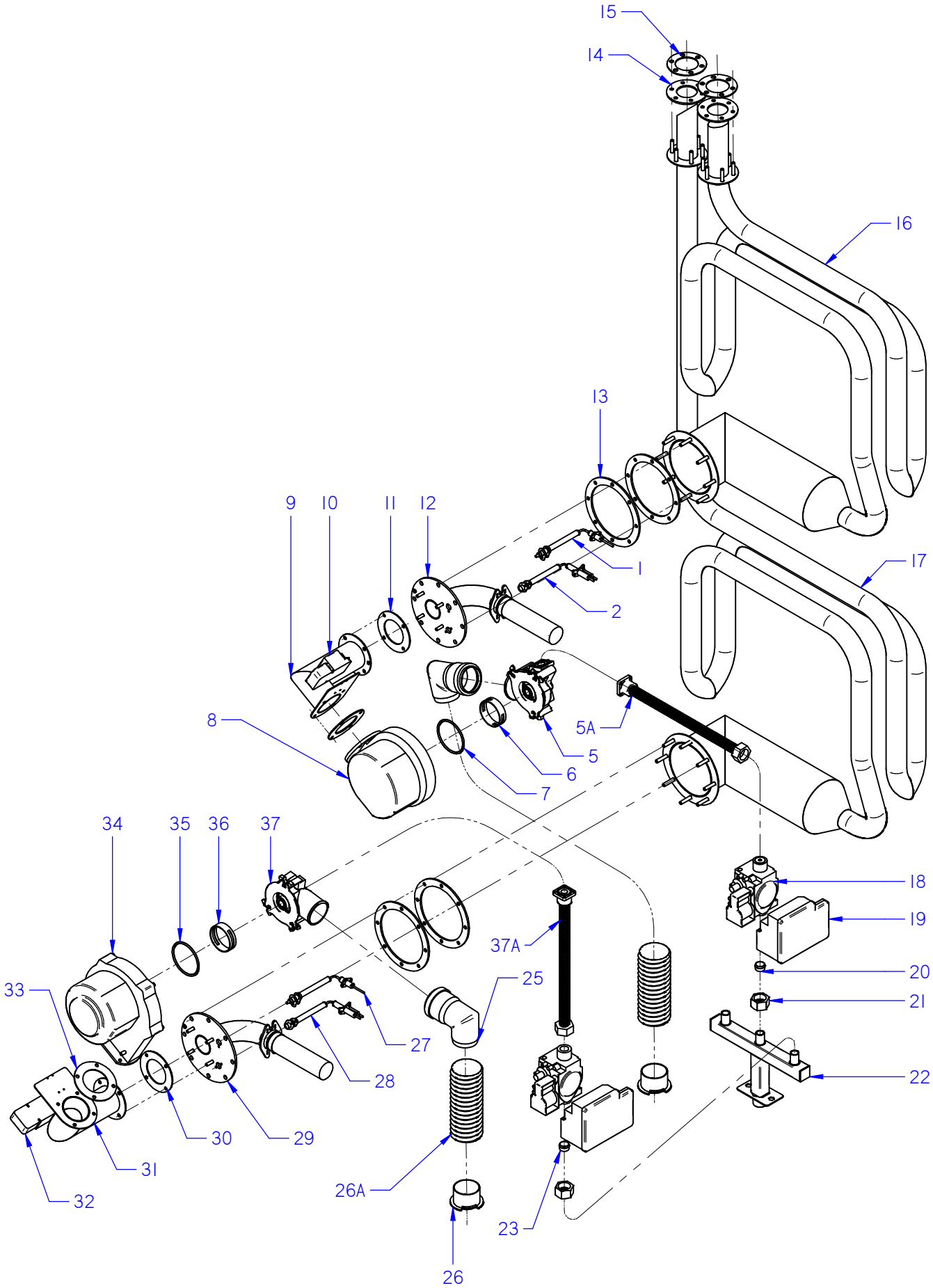

ITEM MARCADO EN COLOR = REPUESTO RECOMENDADO
COLOURED ITEM = RECOMMENDED SPARE PART

Nº plano / N º plane	Firma	Fecha / Date	Denominación / Denomination:FUNC. GAS CONVECCION / FUNCT. GAS CONVECTION	Lamina / Sheet	
C-3081	Iban R.	2014-09	HORNOS AG; ACG; APG-201	10	Fagor Industrial S.Coop. FAGOR Oñate

MOD.	HORNOS / OVEN	ZONA / ZONE	FUNCIONAL GAS CONVECCION FUNCTIONAL GAS CONVECTION	PLANO DIAGRAM	C-3081

ITEM	CODIGO REFERENCE	DENOMINACION	DENOMINATION	ACG-201	AG-201	APG-201					RECOMEND.	ELIMINADO ELIMINATED	INTRODUCID. INTRODUCED	NOTAS
1	12039685	DETECTOR CONVECCION 061	CONVECTION DETECTOR 061	1	1	1					X			
S/Nº	12039450	JUNTA BUJIA CONVECCION 102	PLUG BOARD CONVECTION 102	1	1	1								
2	12039684	BUJIA CONVECCION 061	SPARK CONVECTION 061	1	1	1					X			
S/Nº	12039449	102 JUNTA BUJIA CONVECCION	102 SPARK CONVECTI. BOARD	1	1	1								
3	12044447	TUBO DESAGUE ADV 01	DRAIN PIPE ADV 01	1	1	1								
4	12045252	JUNTA ACOP.SOPLANTE GRAFITO	JOINT COU. GRAPHITE BLOWER	1	1	1								
5	12039540	MIXER COMPLETO	MIXER COMPLETE	1	1	1								
S/Nº	12041612	JUNTA TORICA 63X3	O-RING 63X3	1	1	1								
5A	12040731	TUBO GAS FLEXIBLE 900-90º	FLEXIBLE GAS PIPE 900-90º	1	1	1								
6	12039541	ARO VENTURI ROJO	RED RING VENTURI	1	1	1								
7	12009940	JUNTA TORICA114x3	O-RING 114x3	1	1	1								
8	12044607	SOPLANTE NRG 118 55kw	BLOWER NRG 118 55kw	1	1	1					X			
9	12039560	CAMARA SILENCIADOR 101	CHAMBER MUFFLER 101	1	1	1								
10	12039544	CHISPA BRAHMA	BRAHMA SPARK	1	1	1								
11	12045252	JUNTA ACOP.SOPLANTE GRAFITO	JOINT COU. GRAPHITE BLOWER	1	1	1								
12	12039556	QUEMADOR CONVECCION 101	BURNER CONVECTION 101	1	1	1					X			
13	12039559	JUNTA AMARRE QUEMADOR 101	BURNER TIE BOARD 101	2	2	2								
14	12039474	JUNTA SALIDA INTERCAMBOR 201	OUTPUT BOARD EXCHANG. 201	1	1	1								
15	12039517	AMARRE SALIDA CUERPO INT 101	INSIDE OUT BODY TIE 101	1	1	1								
16	12039473	INTERCAMB. CALOR SUPER. 201	TOP HEAT EXCHANGER 201	1	1	1								
17	12040734	INTERCAMBIAD. CALOR INFERIOR 201	BOTTOM HEAT EXCHANGER 201	1	1	1								
18	12046364	VALVULA REGUL 50HZ ADV	ADV 50HZ VALVE CONTROLL.	2	2	2					X			
18	12046365	VALVULA REGUL 60HZ ADV	ADV 60HZ VALVE CONTROLL.	2	2	2					X			
19	12039440	CAJA CONTROL DBC 579	DBC CONTROL BOX 579	2	2	2					X			
20	12045675	TOBERA Ø 5,2 BP	NOZZLE Ø 5,2 BP	1	1	1								
20	12045677	TOBERA Ø 7,5 GN	NOZZLEØ 7,5 GN	1	1	1								
21	12048850	TUERCA G 3/4	NUT G 3/4	2	2	2								
22	12044366	ENTRADA GAS CO. ACG 202 SUB	GAS INLET ACG 202 SUB	1	_	_								
22	12041051	ENTRADA GAS CO. ADV 202 SUB	GAS INLET ADV 202 SUB	_	1	1								

MOD.	HORNOS / OVEN	ZONA / ZONE	FUNCIONAL GAS CONVECCION FUNCTIONAL GAS CONVECTION	PLANO DIAGRAM	C-3081

ITEM	CODIGO REFERENCE	DENOMINACION	DENOMINATION	ACG-201	AG-201	APG-201					RECOMEND.	ELIMINADO ELIMINATED	INTRODUCID. INTRODUCED	NOTAS
23	12045675	TOBERA Ø 5,2 BP	NOZZLE Ø 5,2 BP	1	1	1								
23	12039569	TOBERA Ø7 GN	NOZZLE Ø7 GN	1	1	1								
24	12039559	JUNTA AMARRE QUEMADOR 101	BURNER TIE BOARD 101	2	2	2								
25	12044447	TUBO DESAGUE ADV 01	DRAIN PIPE ADV 01	1	1	1								
26	12039679	AMARRE TUBOS AIRE	MOORING PIPES AIR	2	2	2								
26A	11000232	TUBO AIRE VULCANO PUZ 50	AIR TUBE VULCANO PUZ 50	2	2	2								
27	12039685	DETECTOR CONVECCION 061	CONVECTION DETECTOR 061	1	1	1					X			
S/Nº	12039450	JUNTA BUJIA CONVECCION 102	PLUG BOARD CONVECTION 102	1	1	1								
28	12039684	BUJIA CONVECCION 061	SPARK CONVECTION 061	1	1	1					X			
S/Nº	12039449	102 JUNTA BUJIA CONVECCION	102 SPARK CONVECTI. BOARD	1	1	1								
29	12039556	QUEMADOR CONVECCION 101	BURNER CONVECTION 101	1	1	1					X			
30	12045252	JUNTA ACOP.SOPLANTE GRAFITO	JOINT COU. GRAPHITE BLOWER	1	1	1								
31	12039560	CAMARA SILENCIADOR 101	CHAMBER MUFFLER 101	1	1	1								
32	12039544	CHISPA BRAHMA	BRAHMA SPARK	1	1	1								
33	12045252	JUNTA ACOP.SOPLANTE GRAFITO	JOINT COU. GRAPHITE BLOWER	1	1	1								
34	12044607	SOPLANTE NRG 118 55kw	BLOWER NRG 118 55kw	1	1	1					X			
35	12009940	JUNTA TORICA114x3	O-RING 114x3	1	1	1								
36	12039541	ARO VENTURI ROJO	RED RING VENTURI	1	1	1								
37	12039540	MIXER COMPLETO	MIXER COMPLETE	1	1	1								
S/Nº	12041612	JUNTA TORICA 63X3	O-RING 63X3	1	1	1								
37A	12039567	TUBO GAS FLEXIBLE 300-90º	FLEXIBLE GAS PIPE 300-90º	1	1	1								

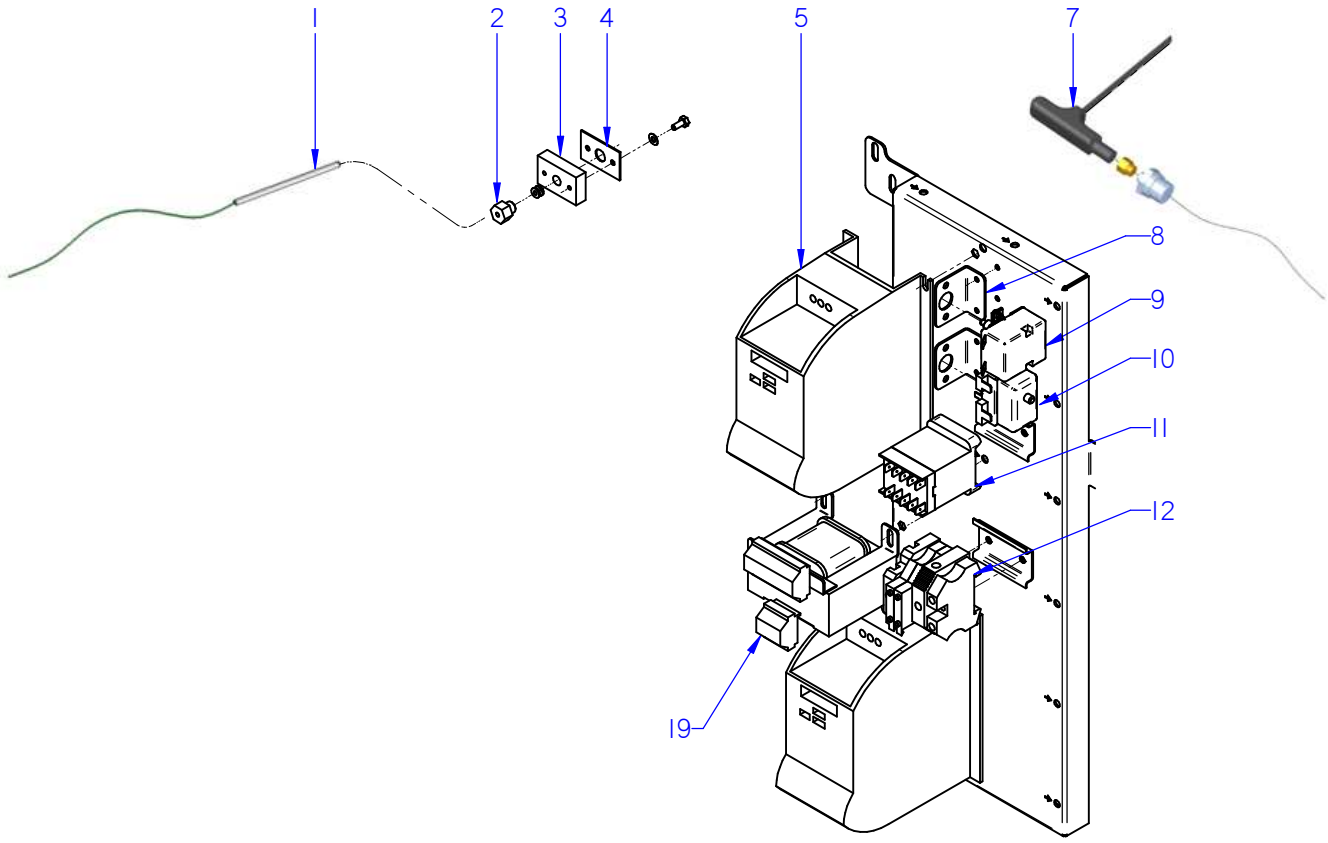

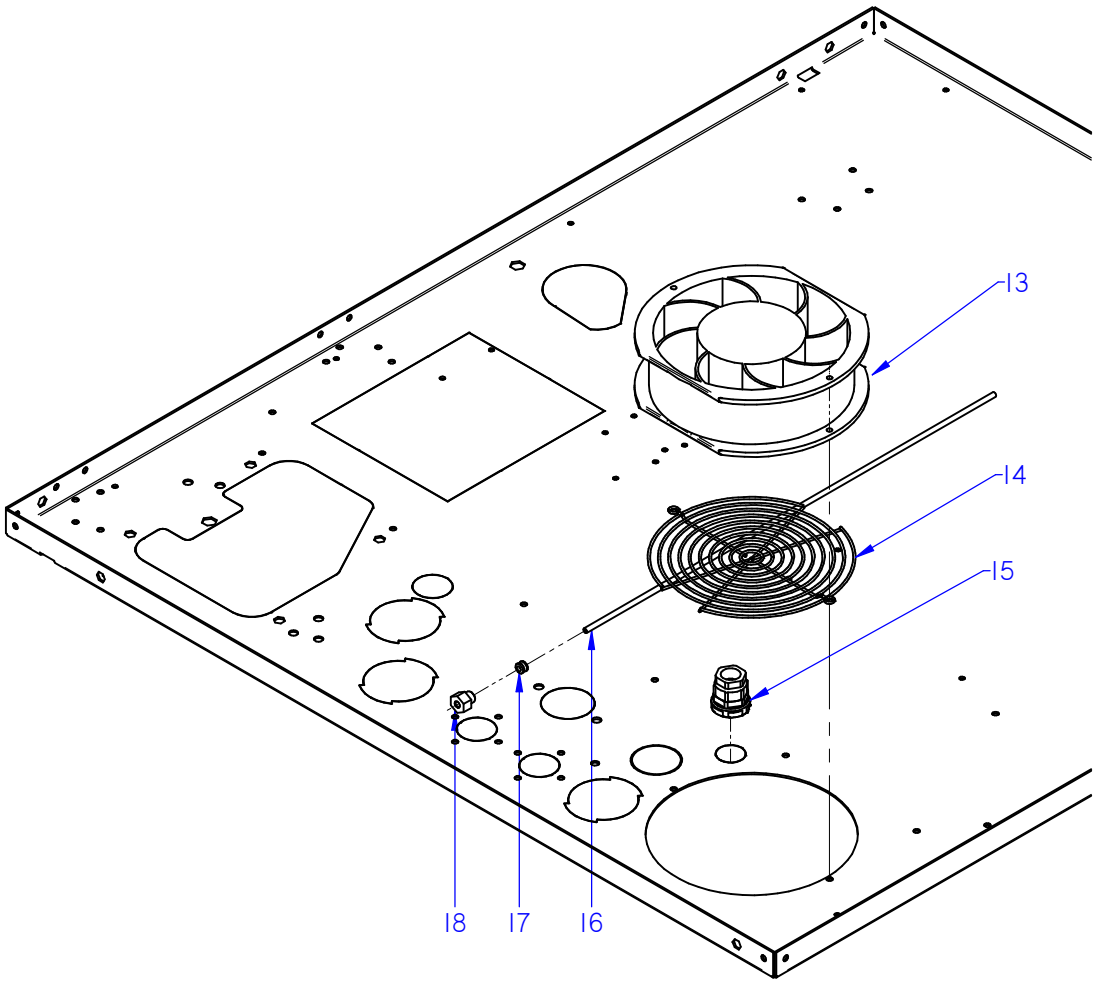

ITEM MARCADO EN COLOR = REPUESTO RECOMENDADO
COLOURED ITEM = RECOMMENDED SPARE PART

Nº plano / N º plane	Firma	Fecha / Date	Denominación / Denomination: CUADRO ELECTRICO / ELECTRIC PANEL	Lamina / Sheet	
C-3082		2012-09	HORNOS AG; ACG; APG-201	11	Fagor Industrial S.Coop. FAGOR Oñate

MOD.	HORNOS / OVEN	ZONA / ZONE	CUADRO ELECTRICO / ELECTRIC PANEL	PLANO DIAGRAM	C-3082

ITEM	CODIGO REFERENCE	DENOMINACION	DENOMINATION	ACG-201	AG-201	APG-201					RECOMEND.	ELIMINADO ELIMINATED	INTRODUCID. INTRODUCED	NOTAS
1	12024642	CONJUN. TERMOPAR CAMARA (Tn)	CHAM. THERMOCOUPLE UNIT (Tn)	1	1	1					X			
2	12023581	RACORD CIERRE SONDA	PROBE CLOSING ADAPTOR	2	2	2								
S/Nº	12024247	BICONO CIERRE SONDA	PROBE CLOSING BICONE	1	1	1								
3	12023737	BASE CIERRE SONDA	FIXING CORE PROBE	1	1	1								
4	12023504	JUNTA PASAMUROS SIMPLE	SIMPLE	1	1	1								
5	12048798	REP VARIADOR REGULADO ADV	REGULATED VARIATOR ADV	2	2	2					X			
7	12039548	SONDA PINCHO ADVANCE	ADVANCE PROBE PINCHO	1	1	1					X			
	12040566	CONTRATUERCA H 1/4"	COUNTERNUT H 1/4"	1	1	1								
8	12022001	SOPORTE TERMOS VAPOR	THERMOSTAT SUPPORT	2	2	2								
9	12024591	TERMOSTATO LIMITADOR 10/21	LIMITER THERMOSTAT10/21	1	1	1					X			
10	12024884	TERMOSTATO LIMITADOR CORTE	THERMOSTAT LIMITER	_	1	1					X			
11	12024011	CONTACTOR 230 V. 50-60 HZ	230 V. 50-60 HZ CONTACTOR	1	1	1					X			
12	12025158	BORNAS PORTA FUSIBLES	FUSE HOLDER TERMINAL	2	_	_								
S/Nº	12024152	FUSIBLE 10A Ø5MM 20X5	10A Ø5MM 20X5 FUSE	2	_	_								
12	12040888	BORNAS PORTAFUSIBLES 15A 4	FUSE HOLDER TERMINAL 15A	_	2	2								
S/Nº	12017280	FUSIBLE 15A Ø5MM 20X5	15A Ø5MM 20X5 FUSE	_	2	2								
	12024743	BORNA TIERRA 10 WPE-10103.O	EARTH TERMINAL10 WPE-10103.O	1	1	1								
	12024199	TOPE FINAL BORNA 10mm2 UL	FINAL STOP TERMINAL UL 10	1	1	1								
13	12024106	VENTILADOR 230V AC 1N 50/60Hz 36KV	FAN 230V AC 1N 50/60Hz 36KW	2	2	2					X			
14	12024790	PROTECCI. VENTILADOR RM-155	FAN PROTECTION RM-155	1	1	1								
15	12009966	PRENSA ESTOPAS	STUFFING BOX	1	1	1								
	12010121	CONTRATUERCA (GAES)790.1300.0	COUNTERNUT (GAES) 790.1300.0	1	1	1								
	12010046	JUNTA GOMA (GAES)	RUBBER BOARD (GAES)	1	1	1								
16	12041634	CON.TERMOPAR VAPOR (Tv)	STEAM THERMOCOUPLE UNIT (Tv)	1	1	_					X			
16	12044609	CONJ. TERMOPAR L425 (Tv)	L425 THERMOCOUPLE UNIT (Tv)	_	_	1					X			
17	12043409	BICONO CIERRE SONDA Ø4	PROBE CLOSING BICONE Ø4	1	1	1								
18	12041049	RACORD CIERRE SONDA Ø 4	PROBE CLOSING ADAPTOR Ø 4	1	1	1								
19	12024173	TRANSFORMADOR 12-0-12-0,24-0	TRANSFORMER 12-0-12-0,24-0	1	1	1					X			

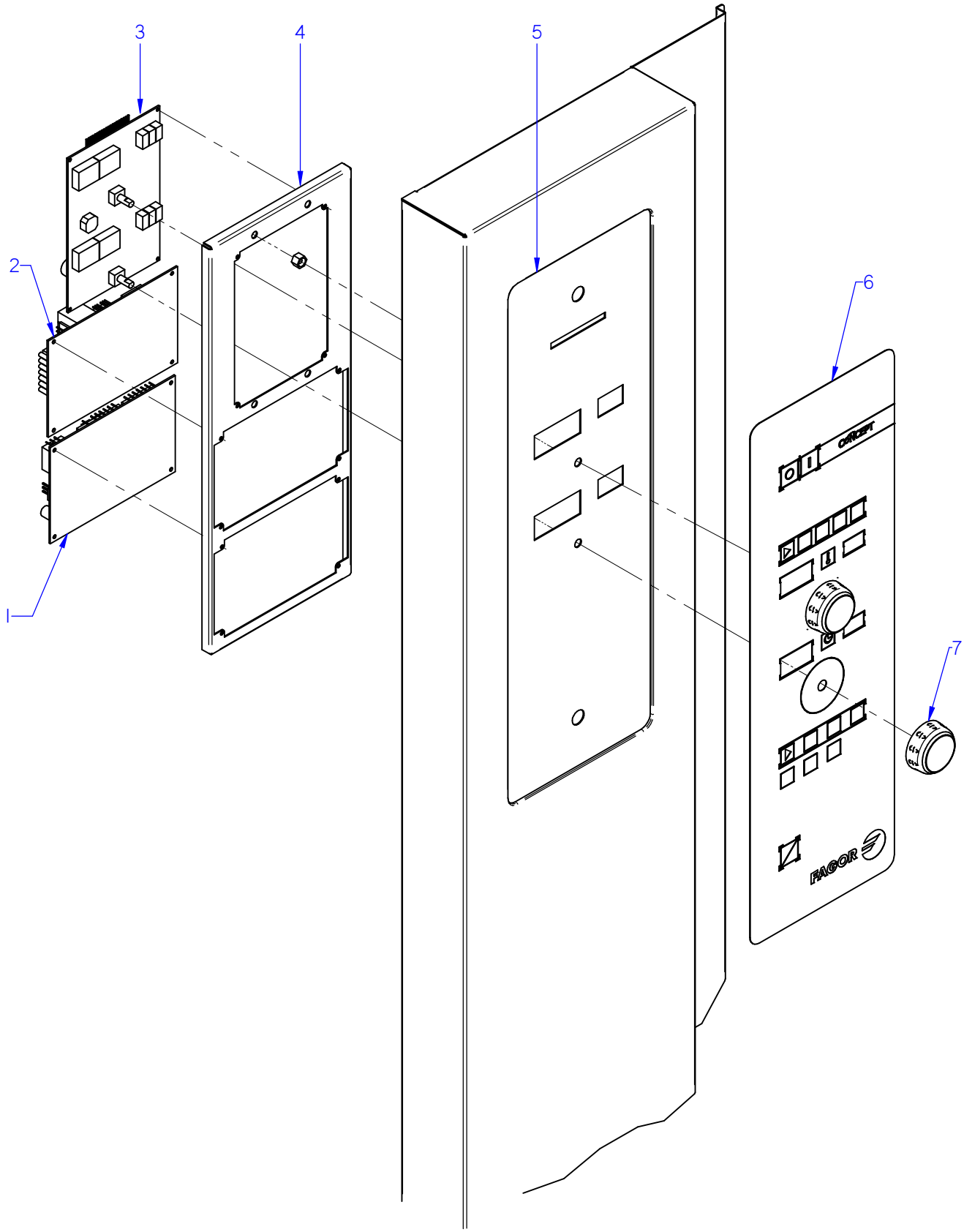

ITEM MARCADO EN COLOR = REPUESTO RECOMENDADO
COLOURED ITEM = RECOMMENDED SPARE PART

Nº plano / N º plane	Firma	Fecha / Date	Denominación / Denomination: PORTAMANDOS / CONTROL HOLDER	Lamina / Sheet	
C-3083		2012-09	HORNOS ACG-201	12	Fagor Industrial S.Coop. Oñate FAGOR

MOD.	HORNOS / OVEN	ZONA / ZONE	CONJUNTO ELECTRICO PORTAMANDOS / CONTROL HOLDER ELECTRIC UNIT	PLANO DIAGRAM	C-3083

ITEM	CODIGO REFERENCE	DENOMINACION	DENOMINATION	ACG-201							RECOMEND.	ELIMINADO ELIMINATED	INTRODUCID. INTRODUCED	NOTAS
1	12046673	CONTROL TARJETA GAS	GAS CONTROL BOARD	1								01.01.16		
1	12130677	TARJETA GAS GRABADA LAVADO	RECORDED GAS C. BOARD WASH	1							X		01.01.16	Serial N. 8100603816
2	12046659	CONTROL TARJETA CAM.12V AC .	CARD CONTROL 12V AC 50/60Hz	1								01.01.16		
2	12130672	TARJETA CAMARA GRAB. LAVADO	RECORD. CHAMBER CARD WASH	1							X		01.01.16	Serial N. 8100603816
3	12046671	VISUALIZADOR 12V AC 50/60Hz 12D	12V AC 50/60Hz 12D DISPLAY	1								01.01.16		
2	12130674	TARJ. PORTAM. GRABADA LAVADO	REC. COTRL PANEL CARD WASH	1							X		01.01.16	Serial N. 8100603816
4	12043668	SOPORTE PROGRA. CONCEPT ADV.	CIRCUIT SUPPORT CONCEPT AD	1										
5	12093219	FRENTE PORTAM. CONCEPT	CONTROL PANEL FRONT CONCEPT	1										
S/Nº	12041815	JUNTA PORTAMANDOS ADV PLUS	CONTROL PANEL SEAL ADV PLUS	1										
6	12044176	SERIGRAFIA ADV CONCEPT GAS	SERIGRAPHY ADV CONCEPT G	1								01.01.16		
5	12129318	SERIGRAFIA ACE-ACG	ACE-ACG SERIGRAPHY	1							X		01.01.16	Serial N. 8100603816
7	12046201	BOTON CONCEPT ADV	CONTROL BUTTON CONC. ADV	2										

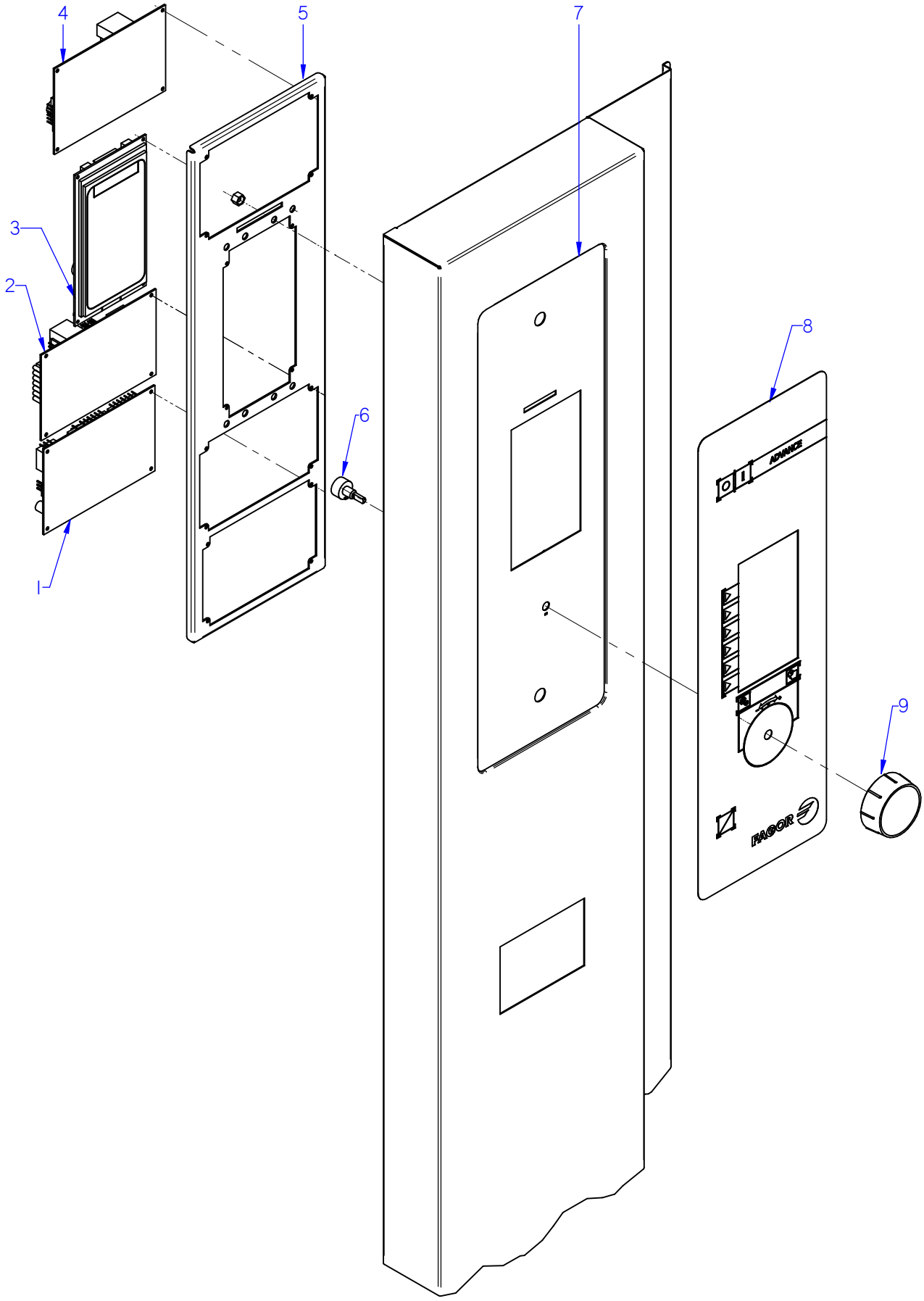

ITEM MARCADO EN COLOR = REPUESTO RECOMENDADO
COLOURED ITEM = RECOMMENDED SPARE PART

Nº plano / N º plane	Firma	Fecha / Date	Denominación / Denomination: PORTAMANDOS / CONTROL HOLDER	Lamina / Sheet	
C-3084		2012-09	HORNOS AG-201	13	Fagor Industrial S.Coop. Oñate FAGOR

MOD.	HORNOS / OVEN	ZONA / ZONE	CONJUNTO ELECTRICO PORTAMANDOS / CONTROL HOLDER ELECTRIC UNIT	PLANO DIAGRAM	C-3084

ITEM	CODIGO REFERENCE	DENOMINACION	DENOMINATION	AG-201							RECOMEND.	ELIMINADO ELIMINATED	INTRODUCID. INTRODUCED	NOTAS
1	12046673	CONTROL TARJETA GAS	GAS CONTROL BOARD	1								01.01.16		
1	12130677	TARJETA GAS GRABADA LAVADO	RECORDED GAS C. BOARD WASH	1							X		01.01.16	Serial N. 8100603816
2	12046659	CONTROL TARJETA CAM.12V AC .	CARD CONTROL 12V AC 50/60Hz	1								01.01.16		
2	12130672	TARJETA CAMARA GRAB. LAVADO	RECORD. CHAMBER CARD WASH	1							X		01.01.16	Serial N. 8100608422
3	12046672	VISUALIZADOR 12V AC 50/60Hz 32 D	12V AC 50/60Hz 32 D DISPLAY	1								01.01.16		
3	12130675	REP PORTAM. ADVANCE LAVADO	RECORD. C. PANEL CARD WASH	1							X		01.01.16	Serial N. 8100608422
4	12046670	CONTROL TARJETA CALD. 12V AC 50/6	CARD CONTROL 12V AC 50/60Hz	1							X			
5	12039536	SOPORTE CIRCUITOS ADVANCE	CIRCUIT SUPPORT ADVANCE	1										
	12009944	ARANDELA A5	FLAT WASHER A.5	4										
	12010281	TUERCA EXAGONAL AUT M5 H. ZI.	HEXAGONAL NUT M5 H. ZINC,	4										
6	12043405	ENCODER GAMA ADVANCE	ADVANCE RANGE ENCODER	1							X			
7	12093236	FRENTE PORTAM. AE-AG COMP.	CONTROL PANEL FRONT AE-AG	1										
S/Nº	12041815	JUNTA PORTAMANDOS ADV PLUS	CONTROL PANEL SEAL ADV PLUS	1										
8	12044139	SERIGRAFIA ADVANCE	ADVANCE SERIGRAPHY	1								01.01.16		
8	12129465	SERIGRAFIA ADVANCE LAVADO	ADVANCE SERIGRAPHY WASHING	1							X		01.01.16	Serial N. 8100608422
9	12044074	BOTON DE MANDO ADV	ADV CONTROL BUTTON	1										

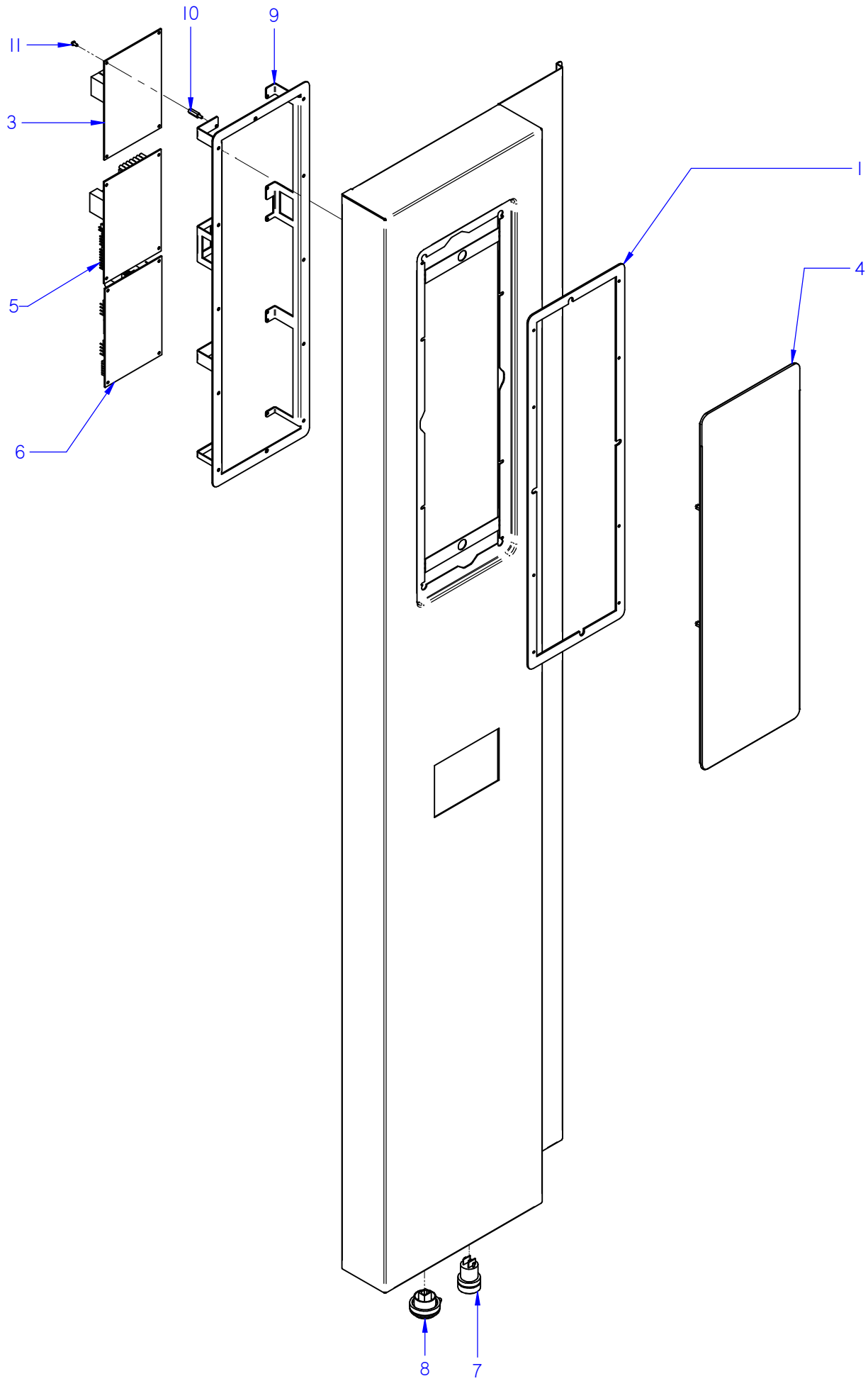

ITEM MARCADO EN COLOR = REPUESTO RECOMENDADO
COLOURED ITEM = RECOMMENDED SPARE PART

Nº plano / N º plane	Firma	Fecha / Date	Denominación / Denomination: PORTAMANDOS / CONTROL HOLDER	Lamina / Sheet	
C-3085		05-2015	HORNOS APG-201	14	Fagor Industrial S.Coop. FAGOR Oñate

MOD.	HORNOS / OVEN	ZONA / ZONE	CONJUNTO ELECTRICO PORTAMANDOS / CONTROL HOLDER ELECTRIC UNIT	PLANO DIAGRAM	C-3085

ITEM	CODIGO REFERENCE	DENOMINACION	DENOMINATION	APG-201							RECOMEND.	ELIMINADO ELIMINATED	INTRODUCID. INTRODUCED	NOTAS
1	12041815	JUNTA PORTAMANDOS ADV PLUS	CONTROL PANEL SEAL ADV PLUS	1							X			
	12010289	TUERCA AUTOB. M3 DIN985	SELF-LOCK NUT M3 DIN985	6										
	12010288	CLIP SUJECIÓN RÁPIDA Ø 4	RAPID CONNECT CLIP Ø 4	12										
3	12046670	CONTROL TARJETA CALD. 12V AC 50/6	CARD CONTROL 12V AC 50/60Hz	1							X			
4	12046579	PLAT ADV PLUS CON SOFTWARE	ADV PLUS SOFTWARE PLATF.	1								25.05.15		
4	12121349	PLAT ADV PLUS CON SOFTWARE	ADV PLUS SOFTWARE PLATF.	1							X		25.05.15	
5	12046659	CONTROL TARJETA CAM.12V AC .	CARD CONTROL 12V AC 50/60Hz	1								01.01.16		
5	12130672	TARJETA CAMARA GRAB. LAVADO	RECORD. CHAMBER CARD WASH	1							X		01.01.16	Serial N. 8100608593
6	12046673	CONTROL TARJETA GAS	GAS CONTROL BOARD	1								01.01.16		
6	12130677	TARJETA GAS GRABADA LAVADO	RECORDED GAS C. BOARD WASH	1							X		01.01.16	Serial N. 8100603816
7	12023927	PULSADOR SERIE MICRO	MICRO SWITCH SERIES	1										
8	12024064	CONECTOR USB VISUAL PLUS	VISUAL PLUS USB CONNECTOR	1										
S/Nº	12023647	TAPA USB VISUAL PLUS	VISUAL PLUS USB COVER	1										
9	12127553	SOPORTE TARJETAS PLUS	PLUS CARDS SUPPORT	1										
10	12025260	DISTANCIADOR 3M	3M SPACER	8										
11	12024612	FIJACION CIRCUITO	CARD CONTROL FIXER	4										

MOD.	HORNOS / OVEN	ZONA / ZONE	VARIOS / MISCELLANEOUS	PLANO DIAGRAM	

ITEM	CODIGO REFERENCE	DENOMINACION	DENOMINATION	ACG-201	AG-201	APG-201						ELIMINADO ELIMINATED	INTRODUCID. INTRODUCED	NOTAS
	12044393	INSTAL. ELECTRICA ACG 201, 202	ELEC. INSTALL. ACG 201, 202	1	_	_								
	12039472	INSTAL.ELECTRICA. APG 202, 201	ELEC. INSTA. APG 202, 201	_	1	1								
	12024575	CABLEADO LUZ INTERIOR 20-21	INTERIOR LIGHT WIRING 20-21	1	1	1								
	12023696	CABLEADO BMF	WIRING BMF	1	1	1								
	12024453	CABL. DETEC-LLAMA-CAM. 20-21	FLAME DETECT. CAMERA WIR. 20-21	1	1	1								
	12024399	CABL. DETEC-LLAMA-CAM. 10-21	FLAME DETECT. CAMERA WIR. 20-21	1	1	1								
	12008032	CABLEADO TIERRA CG9-41	EARTH WIRING CG9-41	1	1	1								
	12008929	CABLEADO VAR-SOPL HGC-20-21	BLOWER DRIVE WIR. HGC-20-21	1	1	1								
	12024655	CABLEADO VAR-SOPL HGV20-21	BLOWER DRIVE WIR. HGV20-21	1	1	1								
	12040567	CABLEADO LAVADO 201-102-202	WIRING CABLE 201-102-202	_	_	1								
	12008976	CABLEADO PULSADOR RESET	RESET BUTTON WIRING	_	_	1								
	12023775	CABLE USB VISUAL PLUS 1,5M	VISUAL PLUS USB CABLE 1,5M	_	_	1								
	12009277	CD HACCP VISUAL COMPLETO	HACCP CD COMPLETE VISUAL	_	_	1								
	12009257	CABLEA. TRANSFORMADOR TFT	WIRING TRANSFORMER TFT	_	_	1								
	12025235	CONECTOR PASO 3,96MM 8 VIAS	CONNECTOR ROUTES 3,96MM 8	1	1	1								

MOD.	HORNOS / OVEN	ZONA / ZONE	REPUESTOS RECOMENDADOS RECOMMENDED SPARE PART	PLANO DIAGRAM	

ITEM	CODIGO REFERENCE	DENOMINACION	DENOMINATION	ACG-201	AG-201	APG-201						ELIMINADO ELIMINATED	INTRODUCID. INTRODUCED	NOTAS
23	**12097686**	**KIT PUERTA 201 CIERRE UNICO**	**SINGLE LOCK DOOR 201 KIT**	**1**	**1**	**1**								C-3073-14
1	**12041083**	**KIT CRISTAL INTER. 201**	**201 INNER GLASS KIT**	**1**	**1**	**1**								C-3073-14
8	12039312	BISAGRA SUPERIOR	UPPER HINGE	1	1	1								C-3073-14
12A	12135274	REP. ASA COMP. 20X CIERRE UNICO	SPARE SINGLE LOCK 20X HANDLE	1	1	1								C-3073-14
13	12047967	BASE BISAGRA INFERIOR 6 DIEN	LOWER HINGE BASE	1	1	1								C-3073-14
16	12024560	INTERRUPTOR MAGNETICO AC	MAGNETIC SWITCH AC	1	1	1								C-3073-14
21	12041134	JUNTA PUERTA COMPL.201 ADV	DOOR JOINT 201 ADV	1	1	1								C-3073-14
22	12041088	JUNTA CIERRE INFERIOR 201	LOWER LOCK JOINT 201	1	1	1								C-3073-14
1	12025161	E.V. 230VAC 50/60Hz 1V	SOLENOID VALVE 230VAC 1 W	1	_	1								C-3074
2	12023794	E.V. 230VAC 50/60Hz 2V	SOLENOID VALVE 230VAC 2 W	1	1	_								C-3074
2	12115418	E.V. 230VAC 50/60Hz 3V	SOLENOID VALVE 230VAC 3 W	_	1	1								C-3074
19	12095019	TERMOSTATO_261_NA_51ºC	THERMOSTAT_261_NA_51ºC	1	1	_								C-3074
1	12024325	MOTOR 230V AC 3N650KW 1450RPM	MOTOR 230V AC 3N650KW 1450	2	2	2								C-3076
4	12024510	RETEN 17X28X7V	RETAINER 28x17x7	4	4	4								C-3076
5	12010122	ANILLO DE SEGURIDAD Ø 28X1.2	SAFETY RING 28x1,2	2	2	2								C-3076
6	12024306	TURBINA RECTA Ø350X127 HANN.	TURBINE RECTA Ø350X127 HAN	2	2	2								C-3076
11	12025193	INTERRUPTOR PUERTA	DOOR SWITCH	2	2	2								C-3077
12	12024638	MOTOR CHIMENEA	FLUEPIPE MOTOR	1	1	1								C-3077
14	12024122	TUBO FLEXIBLE Ø53X360	FLEXIBLE TUBE Ø53X360	1	1	1								C-3077
13	**12126816**	**KIT VALVULA DESAGUE ADVAN.**	**VALVE DRAIN ADVANCE KIT**	_	_	**1**								C-3078
22	12024782	MOTOBOMBA 230V AC 1N 50Hz	MOTOR 230V AC 1N 50Hz 74,6	_	_	1								C-3078
1	**12046107**	**KIT GENERADOR VAPOR 201**	**STEAM GENERATOR 201 KIT**	_	**1**	**1**								C-3079
3	12023573	ELECTRODO ALTO	HIGH LEVEL ELECTRODE	_	1	1								C-3079
4	12023574	ELECTRODO BAJO	LOW LEVEL ELECTRODE	_	1	1								C-3079
5	12023575	ELECTRODO DE MASA	EARTH ELECTRODE	_	1	1								C-3079
11	12039546	MOTOBOMBA 230V AC 1N 50/60Hz	PUMP 230V AC 50/60Hz 30W 1N	_	1	1								C-3079
12	12023901	CONJUN. TERMOPAR VAPOR	STEAM THERMOCOUPLE UNIT	_	1	1								C-3079

MOD.	HORNOS / OVEN	ZONA / ZONE	REPUESTOS RECOMENDADOS RECOMMENDED SPARE PART	PLANO DIAGRAM	

ITEM	CODIGO REFERENCE	DENOMINACION	DENOMINATION	ACG-201	AG-201	APG-201						ELIMINADO ELIMINATED	INTRODUCID. INTRODUCED	NOTAS
1	12039544	CHISPA BRAHMA	BRAHMA SPARK	_	1	1								C-3080
2	12044424	QUEMADOR GENERADOR 201G	BURNER GENERATOR 201G	_	1	1								C-3080
4	12044607	SOPLANTE NRG 118 55kw	BLOWER NRG 118 55kw	_	1	1								C-3080
8	12039440	CAJA CONTROL DBC 579	DBC CONTROL BOX 579	_	1	1								C-3080
9	12046364	VALVULA REGUL 50HZ ADV	ADV 50HZ VALVE CONTROLL.	_	1	1								C-3080
9	12046365	VALVULA REGUL 60HZ ADV	ADV 60HZ VALVE CONTROLL.	_	1	1								C-3080
15	12039430	BUJIA GENERADOR 202	PLUG GENERATOR 202	_	1	1								C-3080
16	12039431	DETECTOR GENERADOR 202	GENERATOR SENSOR 202	_	1	1								C-3080
1	12039685	DETECTOR CONVECCION 061	CONVECTION DETECTOR 061	1	1	1								C-3081
2	12039684	BUJIA CONVECCION 061	SPARK CONVECTION 061	1	1	1								C-3081
8	12044607	SOPLANTE NRG 118 55kw	BLOWER NRG 118 55kw	1	1	1								C-3081
12	12039556	QUEMADOR CONVECCION 101	BURNER CONVECTION 101	1	1	1								C-3081
18	12046364	VALVULA REGUL 50HZ ADV	ADV 50HZ VALVE CONTROLL.	2	2	2								C-3081
18	12046365	VALVULA REGUL 60HZ ADV	ADV 60HZ VALVE CONTROLL.	2	2	2								C-3081
19	12039440	CAJA CONTROL DBC 579	DBC CONTROL BOX 579	2	2	2								C-3081
27	12039685	DETECTOR CONVECCION 061	CONVECTION DETECTOR 061	1	1	1								C-3081
28	12039684	BUJIA CONVECCION 061	SPARK CONVECTION 061	1	1	1								C-3081
29	12039556	QUEMADOR CONVECCION 101	BURNER CONVECTION 101	1	1	1								C-3081
34	12044607	SOPLANTE NRG 118 55kw	BLOWER NRG 118 55kw	1	1	1								C-3081
1	12024642	CONJUN. TERMOPAR CAMARA (Tn)	CHAMBER THERMOCOUPLE (Tn)	1	1	1								C-3082
5	12048798	REP VARIADOR REGULADO ADV	REGULATED VARIATOR ADV	2	2	2								C-3082
7	12039548	SONDA PINCHO ADVANCE	ADVANCE PROBE PINCHO	1	1	1								C-3082
9	12024591	TERMOSTATO LIMITADOR 10/21	LIMITER THERMOSTAT10/21	1	1	1								C-3082
10	12024884	TERMOSTATO LIMITADOR CORTE	THERMOSTAT LIMITER	_	1	1								C-3082
13	12024106	VENTILADOR 230V AC 1N 50/60Hz 36KW	FAN 230V AC 1N 50/60Hz 36KW	2	2	2								C-3082
16	12041634	CONJUN.TERMOPAR VAPOR (Tv)	STEAM THERMOCOUPLE UNIT (Tv)	1	1	_								C-3082
16	12044609	CONJ. TERMOPAR L425 (Tv)	L425 THERMOCOUPLE UNIT (Tv)	_	_	1								C-3082
19	12024173	TRANSFORMADOR 12-0-12-0,24-0	TRANSFORMER 12-0-12-0,24-0	1	1	1								C-3082

MOD.	HORNOS / OVEN	ZONA / ZONE	REPUESTOS RECOMENDADOS RECOMMENDED SPARE PART	PLANO DIAGRAM	

ITEM	CODIGO REFERENCE	DENOMINACION	DENOMINATION	ACG-201	AG-201	APG-201						ELIMINADO ELIMINATED	INTRODUCID. INTRODUCED	NOTAS
1	12130677	TARJETA GAS GRABADA LAVADO	RECORDED GAS C. BOARD WASH	1	_	_								C-3083
2	12130672	TARJETA CAMARA GRAB. LAVADO	RECORD. CHAMBER CARD WASH	1	_	_								C-3083
3	12130674	TARJ. PORTAM. GRABADA LAVADO	REC. COTRL PANEL CARD WASH	1	_	_								C-3083
6	12129318	SERIGRAFIA ACE-ACG	ACE-ACG SERIGRAPHY	1	_	_								C-3083
1	12130677	TARJETA GAS GRABADA LAVADO	RECORDED GAS C. BOARD WASH	_	1	_								C-3084
2	12130672	TARJETA CAMARA GRAB. LAVADO	RECORD. CHAMBER CARD WASH	_	1	_								C-3084
3	12130675	REP PORTAM. ADVANCE LAVADO	RECORD. C. PANEL CARD WASH	_	1	_								C-3084
4	12046670	CONTROL TARJETA CALD. 12V AC 50/6	CARD CONTROL 12V AC 50/60Hz	_	1	_								C-3084
6	12043405	ENCODER GAMA ADVANCE	ADVANCE RANGE ENCODER	_	1	_								C-3084
8	12129465	SERIGRAFIA ADVANCE LAVADO	ADVANCE SERIGRAPHY WASHING	_	1	_								C-3084
1	12041815	JUNTA PORTAMANDOS ADV PLUS	CONTROL PANEL SEAL ADV PLUS	_	_	1								C-3085
3	12046670	CONTROL TARJETA CALD. 12V AC 50/6	CARD CONTROL 12V AC 50/60Hz	_	_	1								C-3085
4	12121349	PLAT ADV PLUS CON SOFTWARE	ADV PLUS SOFTWARE PLATF.	_	_	1								C-3085
5	12130672	TARJETA CAMARA GRAB. LAVADO	RECORD. CHAMBER CARD WASH	_	_	1								C-3085
6	12130677	TARJETA GAS GRABADA LAVADO	RECORDED GAS C. BOARD WASH	_	_	1								C-3085

SIT

APG 06 1, APG 10 1, APG 20 1,
APG 10 2, APG 20 2

AG 06 1, AG 10 1, AG 20 1,
AG 10 2, AG 20 2

ACG 06 1, ACG 10 1, ACG 20 1,
ACG 10 2, ACG 20 2

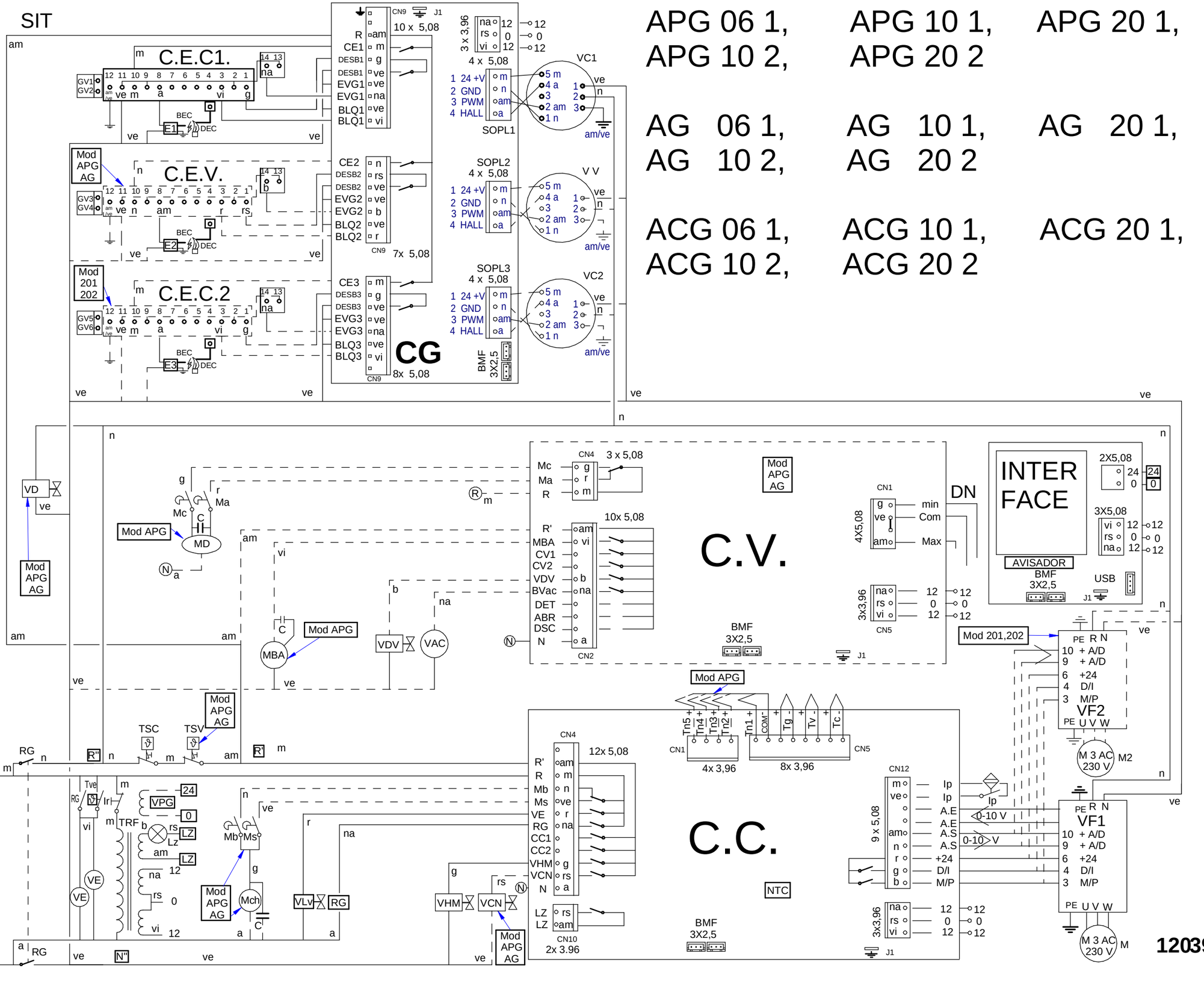

12039293

		061, 101, 102		202, 201		201, 202	102	101	061
		AG		APG	AG	ACG			
Genrl	1	12039537 12049470 UL		12039472		12044393	12044401		
Cbl.Sp VC1	2	12024598	12008929	12024655	12008929	12024655	12008929	12024598	
Cbl.Sp V V	3	12024598		12008929	12024598				
Cbl.Sp VC2	4			12008929					
Dll.C1	5	12024399		12024453			12024399		
Dll.V	6	12024453							
BMF	7	12023696							
Dll.C2	8			12024399					
ADPT	9		12039455				12039455		
Lz	10	12024569		12024575			12024569		
Lavado	11		12040567						
Rst	12		12008976						
TFT	13		12009257						
USB	14		12023775						
Tierra	15	12008032							
Ventilador	16	12130535		12130541			12130535		
Esquema	-	12039676 12049534 UL							
Leyenda	-	12022177							
Ind.Comp	-	12022160							
Sop VC1		NRG118	RG128						NRG118
Sop VV		NRG118		RG148	NRG118				
Sop VC2				RG128					

VE 061,101,102 12023862
VE 201,202 12014105

a vi TVE vi m r

Ms 12025193
M1 12018443
Mb 12025193
g ve n g am/ve 12024463 RC a

Hanning 12024325
Fir 12024358

M1

M1 M1 M1 am/ve

PE ve n N R am/ve 12024329 VF1
M/P D/I RST DN2 + 24 V ADC1 + 0V
DIN0 DN1 3 b 4 g 5 6 r 8 9 n am
g n m

TSC 12024591 360ºC
TSV 12024884
RG 12024011
n vi ve na A1 A2 m m a a m

Mod AG, APG

12007948 C.V.
g r m Mc Ma R
am vi b na a N
R' MBA CV1 CV2 VDV BVac DET ABR DSC
g ve am min Com Max
na rs vi 12 0 12
BMF am/ve

INTER FACE
AVISADOR
USB
VG VPG
12 0 12 vi rs na
0 24
BMF am/ve

200

Mod 20x

M2

Hanning 12024325
Fir 12024358

am/ve

M2 M2 M2 M2 am/ve

PE ve n N R am/ve 12024329 VF2
M/P D/I RST DN2 + 24 V ADC1 + 0V
DIN0 DN1 3 b 4 g 5 6 r 8 9 n am
g n m

TRF 12024173 VPG 12024153
12 0 0 12 12 0
m a 0 24 0 230
na rs rs vi b am
am/ve a 12024743 N R 12024199 20x
061,101,102 12025158 fusible 10A 12024152
201, 202 12040888 fusible 15A 12017280

VPG
Tn5 + Tn4 + Tn3+ Tn2+ Tn1 + COM- + Tg - + Tv - + Tc -
am a r ve b ve b ve b ve b ve b

12007938 C.C.
am m n ve r na g rs a N
R' R Mb Ms VE RG CC1 CC2 VHM VCN
m ve am n r g b Ip Ip As As +24 D/I M/P
na rs vi 12 0 12
rs am LZ LZ BMF am/ve

CG 12009256
BLQ3 BLQ3 EVG3 EVG3 DESB3 DESB3 CE3
BLQ2 BLQ2 EVG2 EVG2 DESB2 DESB2 CE2
BLQ1 BLQ1 EVG1 EVG1 DESB1 DESB1 CE1 R
vi ve na ve ve g m r ve b ve ve rs n vi ve na ve ve g m am
na rs vi
sp 3 sp 2 sopl 1
24+V GND PWM HALL
BMF a am n m

Mod 20x

12039544 am/ve N L 15 6 DLL SI
VV am/ve
n am a m
Tg TSV
ve g am 12023573 12023574 12023575
12024453
Mod AG, APG

12039544 am/ve N L 15 5 DLL SI
VC1 am/ve
ve am/ve n
n am a m

12039544 am/ve N L 15 8 DLL SI
VC2 am/ve
ve am/ve n
n am a m
12024399

Mod 20x

Mod AE, APE
VAc ve na 12039546

SIT P.OUT VENT P.R ADJ PINT PIN DLL
CE C2 ve m a vi g am/ve na 12039440
CEV ve n am r rs am/ve b 12039440
CE C1 ve m a vi g am/ve na 12039440

Mod AG, APG

Variador de Siemens.
Pulsar [P] paraentrar o salir de los Parmetros.
Nota. Si se modifica algunvalor del nivel Basico,
hay que volver a grabar el nivel 3.

P0010 = 1 Para inicio programación. (Nivel Basico)
P0100 = 0 (Valor en KW 50Hz Europa)
P0304 = 230 (Vn V)
P0305 = 1,8 (Inb A)
P0307 = 0,37 (Pn KW)
P0310 = 50 (Fn Hz)
P0311 = 1400 (rpm Nom)
P0700 = 2 (Terminal)
P1000 = 2 (Consigna ADC)
P1080 = 25 (F.min Hz)
P1082 = 50 (F.Max Hz)
P1120 = 5" (Ton ")
P1121 = 5" (Toff ")
P3900 = 1 (Fin de la programación y grabación de datos.)
P0003 =3 (Nivel 3 Experto).
P0005 = 27 (Visualizacion = Corriente de salida)
P0611 = 16000 (Tiempo de activación de sobrecarga Seg.)
P0640 = 150 (Sobrecarga de corriente en %)
P1210 = 6 (Rearranque automático)
P1300 = 2 (Modo Parábola, Ventilador)
P1800 = 16 (F.Base KHz) (Cuanto mas alto: - ruido acústico)
P2000 = 55 (F.Refencia de la consigna Hz)

COPIAR PARAMETROS DESDE EL BOP AL VARIADOR
P0003 = 3
P0010= 30
P0803 = 1

SOLO USAR CUANDO EL BOP SE HA BORRADO
P0802 desde Variador a BOP

Tornillo M6x15 LATON 12010016
Cable masa
Tuerca M6 LATON 12010130

HGP
C NC 12023927 T723010000
12024064
12023647

Mod 20x

Lz 12024545 12025123
Lz 12024545 12025123

am/ve g vi r ve a
12040567
12024782 50Hz
12024787 60Hz
MBA 0,1uF 0,22 uF 0,1uF
12009059
12025135
12017826 50/60 Hz
3 uF

Mod APG
APG 201 202
APG 061, 101, 102

VCN 3 l/min Berdea 12024083
VHM 0.25l/min Gorria 12024509
VDV 8l/min Urdina 12024045
VLV VD
12023794
Mod ACG 12025161

12009851
PRENSAESTOPAS

vi a
VE 061,101,102 12023862
VE 201,202 12014105

b rs m ve 10 Ip 12024560

	ESPAÑOL	FRANÇAIS	ENGLISH	DEUTSCH	ITALIANO
BEC	Bujía Encendido Cámara	Bougie Allumage Chambre	Chamber Spark Plug	Zündkerze Einschalten Garraum	Candela di Accensione Camera
BEV	Bujía Encendido Caldera	Bougie Allumage Chaudière	Boiler Spark Plug	Zündkerze Einschalten Boile	Candela di Accensione Caldaia
C.C.	Control Camara	Contrôle Chambre	Chamber Control	Steuerung Garraum	Controllo Camera
C.E.C	Control Combustión Cámara	Contrôle Combustion Chambre	Chamber Combustion Control	Steuerung Verbrennung Garraum	Controllo Combustione Camera
C.E.V	Control Combustión Caldera	Contrôle Combustion Chaudière	Boiler Combustion Control	Steuerung Verbrennung Boiler	Controllo Combustione Caldaia
C.G.	Control Gas	Contrôle Gaz	Control Gas	Steuern Sie Gas	Controlli il gas
C.V.	Control Caldera	Contrôle Chaudière	Boiler Control	Steuerung Boiler	Controllo Caldaia
CC1, CC2	Contactor Resistencia Cámara	Contacteur Élément Chauffant Chambre	Chamber Heating Element Contactor	Schütz Heizwiderstand Garraum	Contattore Resistenza Camera
CK1, CK2	Contactor General Calentamiento	Relais Élément Chauffant	Heating Element Relay	Relais Heizwiderstand	Relè Resistenza
CV1, CV2	Contactor Resistencias Caldera	Contacteur Élément Chauffant Chaudière	Boiler Heating Element Contactor	Schütz Heizwiderstand Boiler	Contattore Resistenza Caldaia
DEC	Detector Llama Cámara	Détecteur Flamme Chambre	Chamber Flame Detector	Flammendetektor Garraum	Rilevatore di Fiamma Camera
DEV	Detector Llama Caldera	Détecteur Flamme Chaudière	Boiler Flame Detector	Flammendetektor Boiler	Rilevatore di Fiamma Caldaia
DN	Detector Nivel Caldera	Détecteur Niveau Chaudière	Boiler Level Detector	Pegeldetektor Boiler	Rilevatore Livello Caldaia
F	Fusibles	Fusibles	Fuses	Sicherungen	Fusibili
FI	Filtro Interferencias	Filtre Interférences	Interference Filter	Störungsfilter	Filtro Interferenze
FM	Térmico Motor	Thermique Moteur	Thermal Engine	Thermoschalter Motor	Termico Motore
GV1, GV2	Electro válvula Gas Cámara	Électrovanne Gaz Chambre	Chamber Gas Solenoid Valve	Elektroventil Gas Garraum	Elettrovalvola Gas Camera
GV3, GV4	Electro válvula Gas Caldera	Électrovanne Gaz Chaudière	Boiler Gas Solenoid Valve	Elektroventil Gas Boiler	Elettrovalvola Gas Caldaia
Ip	Interruptor Seguridad Puerta	Interrupteur Sécurité Porte	Door Safety Switch	Sicherheitsschalter Tür	Iterruttore Sicurezza Porta
Lz	Luz Interior	Éclairage Intérieur	Inner Light	Innenbeleuchtung	Luce Interna
M, M2	Motor Turbina	Moteur Turbine	Turbine Engine	Motor Turbine	Motore Turbina
Ma	Interruptor Micro Abierto	Microrupteur Ouvert	Open Microswitch	Mikroschalter Geöffnet	Iterruttore Micro Aperto
Mb	Interruptor Micro Bajada	Microrupteur Descente	Drop Microswitch	Mikroschalter Senken	Iterruttore Micro Discesa
Mc	Interruptor Micro Cerrado	Microrupteur Fermé	Closed Microswitch	Mikroschalter Geschlossen	Iterruttore Micro Chiuso
Mch	Motor Chimenea	Moteur Cheminée	Stack Engine	Motor Abluftkamin	Motore Canna
MD	Motor Desague	Moteur évacuation	Drain Engine	Motor Abfluss	Motore scolo
Ms	Interruptor Micro Subida	Microrupteur Montée	Rise Microswitch	Mikroschalter Heben	Iterruttore Micro Salita
PF	Potenciómetro Selector Funciones	Potentiomètre Sélecteur Fonctions	Functions Selector Potentiometer	Potentiometer Funktionswahlschalter	Potenziometro Selettore Funzioni
RC	Resistencias Cámara	Éléments Chauffants Chambre	Chamber Heating Element	Heizwiderstände Garraum	Resistenze Camere
RG	Rele General	Relais Général	Main Relay	Hauptrelais	Relè principale
RV	Resistencias Caldera	Éléments Chauffants Chaudière	Boiler Heating Element	Heizwiderstände Boiler	Resistenze Caldaia
Tc	Sonda Cámara	Sonde Chambre	Chamber Probe	Sonde Garraum	Sonda Camera
TCN	Termostato Condensación	Thermostat Condensation	Condensation Thermostat	Thermostat Kondensierung	Termostato Condensazione
Tg	Sonda Caldera	Sonde Chaudière	Boiler Probe	Sonde Boiler	Sonda Caldaia
Tn	Sonda Núcleo	Sonde Noyau	Core Probe	Kerntemperaturmessonde	Sonda Nucleo
TRF	Transformador	Transformateur	Transformer	Transformator	Trasformatore
TSC	Termostato Seguridad Cámara	Thermostat Sécurité Chambre	Chamber Safety Thermostat	Sicherheitsthermostat Garraum	Termostato Sicurezza Camera
TSV	Termostato Seguridad Caldera	Thermostat Sécurité Chaudière	Boiler Safety Thermostat	Sicherheitsthermostat Boiler	Termostato Sicurezza Caldaia
Tv	Sonda Vapor	Sonde Vapeur	Steam Probe	Sonde Dampf	Sonda Vapore
VAC	Bomba Vaciado	Pompe Vidange	Vacuum Pump	Ablasspumpe	Pompa scarico
MBA	Moto Bomba Aclarado	Pompe Rinçage	Rinsing Pump	Pumpe Ausspülen	Pompa Risciacquo
VC1, VC2	Ventilador Soplante Camara	Ventilateur Soufflant	Blowing Fan	Ventilator Gebläse	Ventilatore Soffiante
VCN	Electro válvula Condensación	Électrovanne Condensation	Condensation Solenoid Valve	Elektroventil Kondensierung	Elettrovalvola Condensazione
VDV	Electro válvula Llenado Caldera	Électrovanne Remplissage Chaudière	Chamber Filling Solenoid Valve	Elektroventil Füllung Boiler	Elettrovalvola di Riempimento Caldaia
VE	Ventilador Cuadro Eléctrico	Ventilateur Tableau Électrique	Fan Switchboard	Ventilator Elektrotafel	Ventilatore Quadro Elettrico
VF1,VF2	Variador de Frecuencia	Variateur Vitesse	Speed Variator	Geschwindigkeitsregler	Variatore di Velocità
VHM	Electro válvula Humidificador	Électrovanne Humidificateur	Humidifier Solenoid Valve	Elektroventil Befeuchtungsvorrichtung	Elettrovalvola Umidificatore
Vv	Ventilador Soplante Caldera	Ventilateur soufflement chaudière	Boiler Blowing Fan	Durchbrennenventilator zum Dampfkessel	Ventilatore Soffiante caldaia
	COLORES	**COULEURS**	**COLOUR**	**FARBEN**	**COLORE**
a	Azul	Bleu	Blue	Blau	Blu
am	Amarillo	Jaune	Yellow	Gelb	Giallo
am/ve	Amarillo/verde	Jaune / vert	Yellow / green	Gelb/grün	Giallo/verde
b	Blanco	Blanc	White	Weiß	Bianco
g	Gris	Gris	Grey	Grau	Grigio
m	Marrón	Marron	Brown	Braun	Marrone
n	Negro	Noir	Black	Schwarz	Nero
na	Naranja	Orange	Orange	Orange	Arancio
r	Rojo	Rouge	Red	Rot	Rosso
rs	Rosa	Rose	Pink	Rosa	Roseo
ve	Verde	Vert	Green	Grün	Verde
vi	Violeta	Violet	Purple	Violett	Viola
					T303042000