Mod./Type:	_70/... PCE... - _70/... PCEQ... EXTREME _90/... PCES... SIMPLE - _90/... PCE... EXTREME	cod./num.	2531800.00
		data/date:	01/08/2014

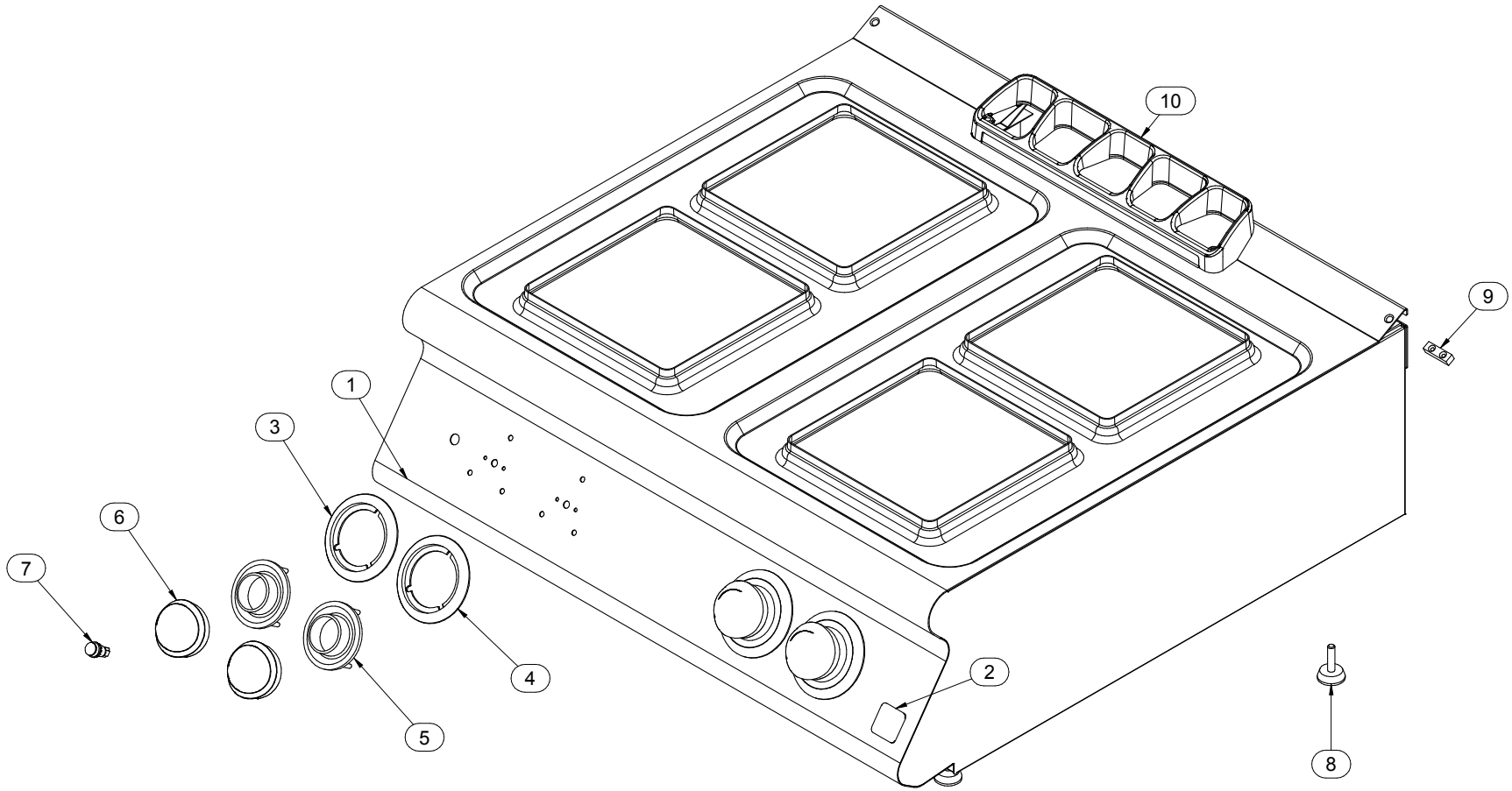

Mod./Type: **_70/... PCE... - CFE... EXTREME**

_90/... PCE... - CFE... SIMPLE / EXTREME

cod./num. 2531802.00

data/date: 02/08/2014

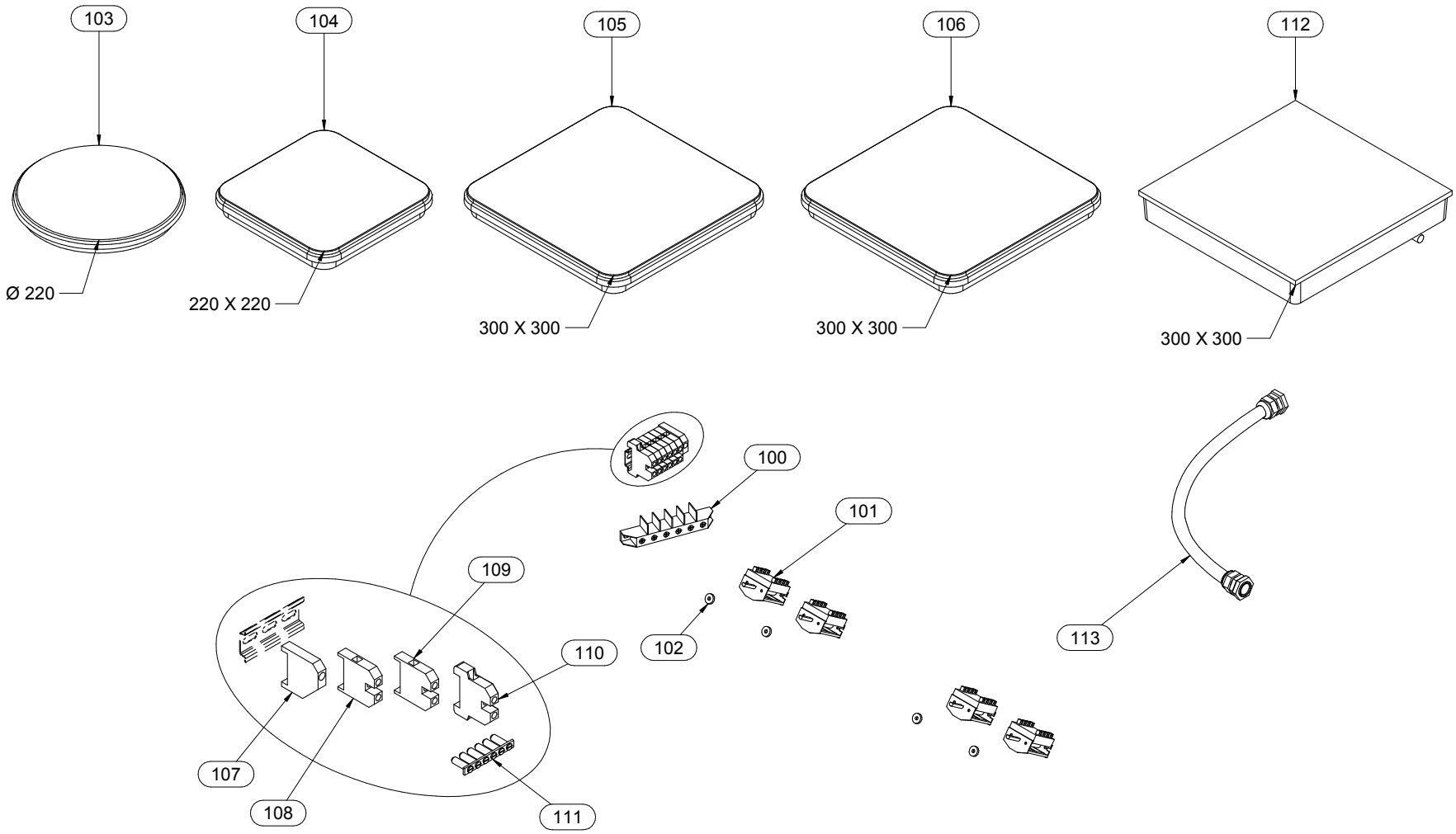

Mod./Type: **_70 - _90 .../40 ... - .../80 ... - .../120 ...**

VANO / CABINET - ...B - ...BE - ...BH2

cod./num. 2531578.00

data/date: 05/06/2014

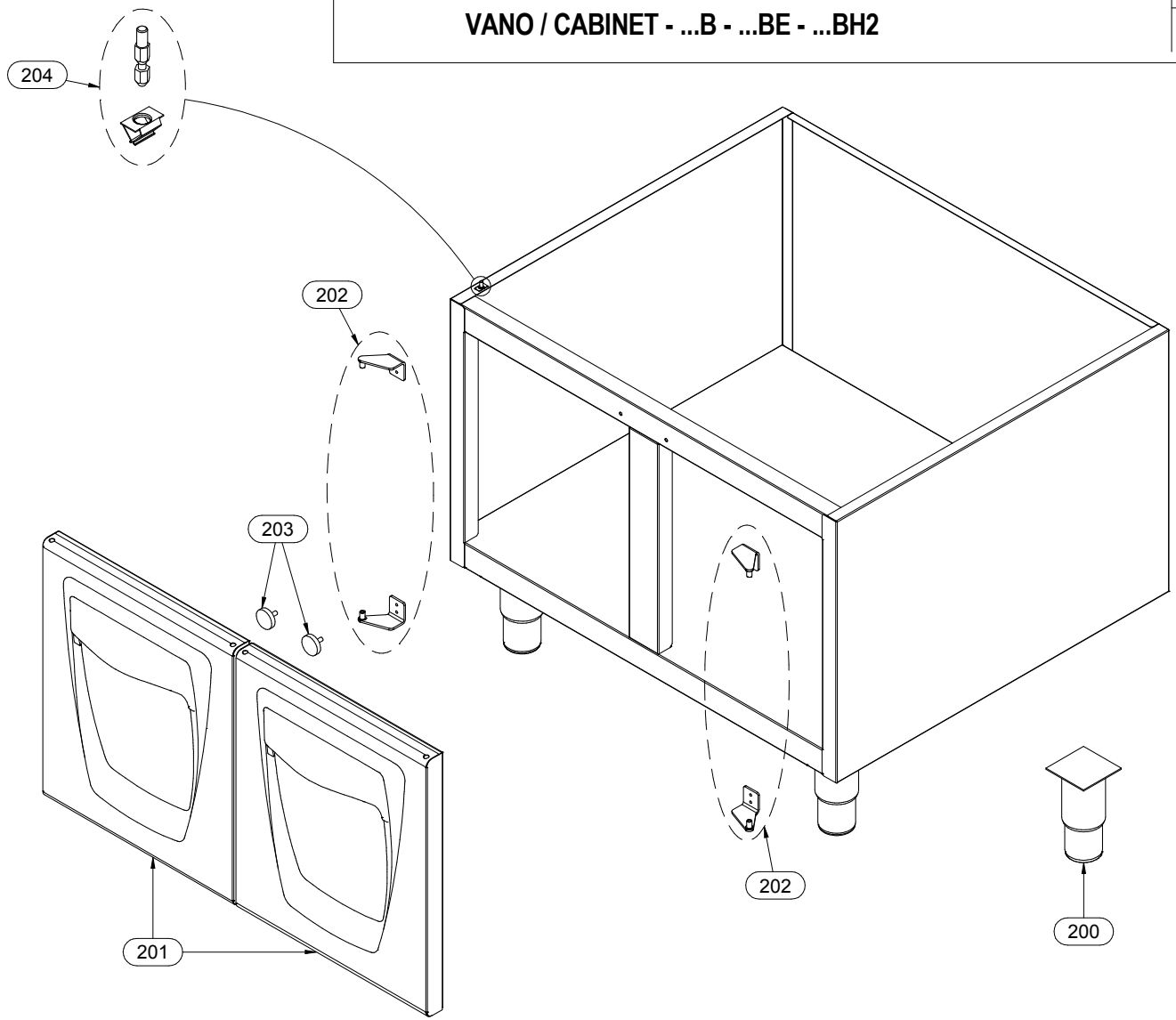

Mod./Type:	_90/... CFES... SIMPLE _90/... CFE... EXTREME	cod./num.	2531806.00
		data/date:	04/08/2014

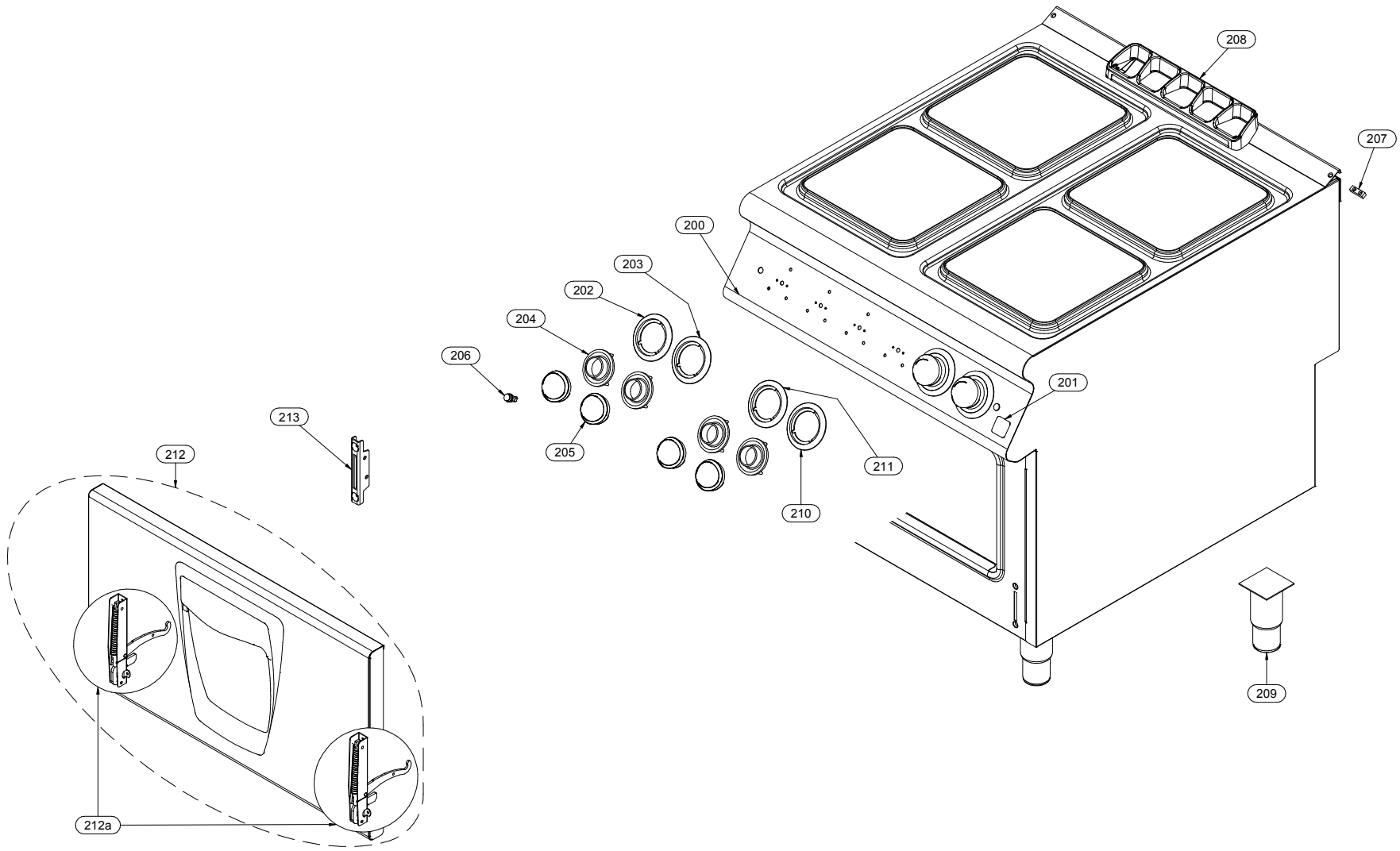

Mod.:	_70/... PCE... _90/... PCE...			cod. / num. 2531801.00 data / date 01/08/2014 rif. / ref. 2531800.00		RICAMBI CONSIGLIATI - RECOMMENDED SPARE PARTS - PIECES DETACHEES RECOMMANDÉES - EMPFOHLENEN ERSATZTEILE	EM70/40 PCE... - EM70/40 PCEQ...	EM70/80 PCE... - EM70/80 PCEQ...	EM70/120 PCE... - EM70/120 PCEQ...	EM90/40 PCES...	EM90/80 PCES... - EM90/80 PCES2...	EM90/120 PCES...	EM90/40 PCE...	EM90/80 PCE... - EM90/80 PCE2...	EM90/120 PCE...	NOTE	
POS.	DESCRIZIONE	DESCRIPTION	DENOMINATION	BENENNUNG	COD.		Q. ty										
1	CRUSCOTTO	CONTROL PANEL	BANDEAU	BEDIENBLENDE	6111174.00		1			1			1				
					6111175.00			1			1			1			
					9111295.00				1			1			1		
2	MARCHIO	BRAND NAME	MARQUE	MARKENZEICHEN	982.021.00		1	1	1	1	1	1	1	1	1	FROM: 15.12.2011	TO: 31.01.2014
					982.023.00		1	1	1	1	1	1	1	1	1	FROM: 01.02.2014	TO:...
3	SERIGRAFIA	SCREEN PRINT	SÉRIGRAPHIE	SIEBDRUCK	910.167.00		1	2	3	1	2	3	1	2	3		
4	SERIGRAFIA	SCREEN PRINT	SÉRIGRAPHIE	SIEBDRUCK	910.168.00		1	2	3	1	2	3	1	2	3		
5	LABIRINTO	LABYRINTH	LABYRINTHE	LABYRINTH	256.235.00		2	4	6	2	4	6	2	4	6		
6	MANOPOLA	KNOB	BOUTON	DREHKNOPF	256.234.00	*	2	4	6	2	4	6	2	4	6		
7	LAMPADA SPIA ARANCIO	ORANGE INDICATOR LIGHT	LAMPE TEMOIN ORANGE	ORANGE KONTROLLAMPE	963.013.00		1	1	1	1	1	1	1	1	1		
8	PIEDINO	FOOT	PIED	STELLFUSS	951.083.00		4	4	4	4	4	4	4	4	4	SOLO VERSIONE (-T)	ONLY (-T) VERSION
9	PIASTRINA GIUNZIONE	FIXING PLATE	PLAQUETTE FIXAGE	BEFESTIGUNGSPLATTE	941.130.00		1	1	1	1	1	1	1	1	1		
10	GRIGLIA CAMINO	FLUE GRIDDLE	GRILLE POUR CHEMINÉE	KAMINROST	982.012.00		1	1	1	1	1	1	1	1	1		
11																	
12																	
13																	
14																	
15																	
16																	
17																	
18																	
19																	
20																	
21																	
22																	
23																	
24																	
25																	
26																	
27																	
28																	
29																	
30																	
31																	
32																	
33																	
34																	
35																	
36																	
37																	
38																	
39																	

Mod.:	_90/… PCE… - CFE… SIMPLE / EXTREME			cod. / num. 2532279.00 data / date 24/04/2014 rif. / ref. 2531802.00		RICAMBI CONSIGLIATI - RECOMMENDED SPARE PARTS - PIÈCES DÉTACHÉES RECOMMANDÉES - EMPFOHLENEN ERSATZTEILE	_90/40 PCES...	_90/80 PCES... - ...CFES - ...CFESV	_90/120 PCES...	_90/80 PCES2... - ...CFES2 - CFESV2	_90/40 PCE...	_90/80 PCE... - ...CFE - ...CFEV	_90/120 PCE...	_90/80 PCE2... - ...CFE2 - ...CFEV2	_90/40 PCER...	_90/80 PCER...	_90/80 CFER - ...CFERV	_90/80 PCER2 - ...CFER2 - ...CFERV2	NOTE
POS.	DESCRIZIONE	DESCRIPTION	DENOMINATION	BENENNUNG	COD.		Q.ty												
100	MORSETTIERA	TERMINAL BOARD	BORNES	KLEMMENBRETT	M566050500		1	1	-	-	1	1	-	-	1	1	-	-	
101	COMMUTATORE	CHANGE-OVER SWITCH	COMMUTATEUR	UMSCHALTER	661.002.00	*	2	4	6	4									
					961.000.00	*					2	4	6	4	2	4	4	4	
102	GUARNIZIONE	WASHER	GUARNITURE	DICHTUNGSRING	953.020.00		2	4	6	4	2	4	6	4	2	4	4	4	
103	PIASTRA ELETTRICA Ø 220	ELECTRIC PLATE Ø 220	PLAQUE ELECTRIQUE Ø 220	ELEKTROKOCHPLATTE Ø 220	665.006.00	*	-	-	-	-	-	-	-	-	-	-	-	-	
104	PIASTRA ELETTRICA 220 X 220	ELECTRIC PLATE 220 X 220	PLAQUE ELECTRIQUE 220 X 220	ELEKTROKOCHPLATTE 220 X 220	665.039.00	*	-	-	-	-	-	-	-	-	-	-	-	-	
105	PIASTRA ELETTRICA 3,5kW	ELECTRIC PLATE 3,5kW	PLAQUE ELECTRIQUE 3,5kW	ELEKTROKOCHPLATTE 3,5kW	965.063.00	*	2	4	6	4	-	-	-	-	-	-	-	-	
106	PIASTRA ELETTRICA 4kW	ELECTRIC PLATE 4kW	PLAQUE ELECTRIQUE 4kW	ELEKTROKOCHPLATTE 4kW	965.004.00	*	-	-	-	-	2	4	6	4	-	-	-	-	
107	BLOCCAMORSETTI	TERMINAL STOPPER	BORNE BLOQUANT	BLÖCK-KLEMME	663.059.00		-	-	1	1	-	-	1	1	-	1	1	1	
108	MORSETTO	TERMINAL	BORNE	KLEMME	663.061.00		-	-	3	6	-	-	3	6	-	-		6	
					663.058.00		-	-			-	-			-	-	3		
109	MORSETTO BLU	BLUE TERMINAL	BORNE BLUE	NULL-KLEMME	663.076.00		-	-	3	-	-	-	3	-	-	-		2	
					663.083.00		-	-		-	-	-		-	-	-	2		
110	MORSETTO TERRA - PE	PE-TERMINAL	BORNE PE	ERD-KLEMME	663.060.00		-	-	1	1	-	-	1	1	-	-		1	
					663.057.00		-	-			-	-			-	-	1		
111	BARRETTE COLLEGAMENTO	CONNECTOR PIN	BARRETTE DE CONNECTION	VERBINDUNG-STAB	663.056.00		-	-	1	1	-	-	1	1	-	-		1	
					663.055.00		-	-			-	-			-	-	0,2		
112	PIASTRA ELETTRICA 4kW	ELECTRIC PLATE 4kW	PLAQUE ELECTRIQUE 4kW	ELEKTROKOCHPLATTE 4kW	965.083.00	*	-	-	-	-	-	-	-	-	2	4	4	4	
113	GUAINA	SHEATH	GAINE	MANTEL	256.478.00		-	-	-	-	-	-	-	-	2	4	4	4	
114																			
115																			
116																			
117																			
118																			
119																			
120																			
121																			
122																			
123																			
124																			
125																			
126																			
127																			
128																			
129																			
130																			
131																			
132																			
133																			
134																			
135																			
136																			
137																			
138																			
139																			
140																			
141																			
142																			

Mod.:	_70/... - _90/… VANO / CABINET …B - …BE - …BH2			cod. / num. 2531579.00 data / date 05/06/2014 rif. / ref. 2531578.00		RICAMBI CONSIGLIATI - RECOMMENDED SPARE PARTS - PIÈCES DÉTACHÉES RECOMMANDÉES - EMPFOHLENEN ERSATZTEILE	EM70/40 ...	EM70/80 ...	EM70/120 ...	EM90/40 ...	EM90/80 ...	EM90/120 ...	NOTE	
POS.	DESCRIZIONE	DESCRIPTION	DENOMINATION	BENENNUNG	COD.		Q. ty							
200	PIEDINO	FOOT	PIED	STELLFUSS	912.090.00		4	4	4	4	4	4	FROM: 15.12.2011	TO: 17.05.2013
					912.090.14		4	4	4	4	4	4	FROM: 18.05.2013	TO:...
201	PORTA	DOOR	PORTE	TÜR	256.215.00		1	2	3	1	2	3		
202	COPPIA CERNIERE	GASKETS PAIR	COUPLE CHARNIÈRES	SCHARNIERPAAR	256.216.00		1	2	3	1	2	3		
203	MAGNETE	MAGNET	MAGNÉTO	MAGNET	684.007.00		1	2	3	1	2	3	FROM: 15.12.2011	TO: 01.01.2014
					984.006.00		1	2	3	1	2	3	FROM: 02.01.2014	TO:...
204	FISSAGGIO	FIXING	FIXAGE	BEFESTIGUNG	256.431.00		4	4	4	4	4	4	FROM: 04.05.2015	TO:...
205														
206														
207														
208														
209														
210														
211														
212														
213														
214														
215														
216														
217														
218														
219														
220														
221														
222														
223														
224														
225														
226														
227														
228														
229														
230														
231														
232														
233														
234														

Mod.:	_90/... CFES... SIMPLE _90/... CFE... EXTREME			cod. / num. 2531807.00 data / date 04/08/2014 rif. / ref. 2531806.00		RICAMBI CONSIGLIATI - RECOMMENDED SPARE PARTS - PIÈCES DÉTACHÉES RECOMMANDÉES - EMPFOHLENEN ERSATZTEILE	EM90/80 CFES - EM90/80 CFES2	EM90/80 CFE - EM90/80 CFE2	EM90/80 CFESV - EM90/80 CFESV2	EM90/80 CFEV - EM90/80 CFEV2	NOTE	
POS.	DESCRIZIONE	DESCRIPTION	DENOMINATION	BENENNUNG	COD.		Q. ty					
200	CRUSCOTTO	CONTROL PANEL	BANDEAU	BEDIENBLENDE	9111302.00		1	1	1	1		
201	MARCHIO	BRAND NAME	MARQUE	MARKENZEICHEN	982.021.00		1	1	1	1	FROM: 15.12.2011	TO: 31.01.2014
					982.023.00		1	1	1	1	FROM: 01.02.2014	TO:...
202	SERIGRAFIA	SCREEN PRINT	SÉRIGRAPHIE	SIEBDRUCK	910.167.00		2	2	2	2		
203	SERIGRAFIA	SCREEN PRINT	SÉRIGRAPHIE	SIEBDRUCK	910.168.00		2	2	2	2		
204	LABIRINTO	LABYRINTH	LABYRINTHE	LABYRINTH	256.235.00		6	6	6	6		
205	MANOPOLA	KNOB	BOUTON	DREHKNOPF	256.234.00	*	6	6	6	6		
206	LAMPADA SPIA ARANCIO	ORANGE INDICATOR LIGHT	LAMPE TEMOIN ORANGE	ORANGE KONTROLLAMPE	963.013.00		2	2	2	2		
207	PIASTRINA GIUNZIONE	FIXING PLATE	PLAQUETTE FIXAGE	BEFESTIGUNGSPLATTE	941.130.00		1	1	1	1		
208	GRIGLIA CAMINO	FLUE GRIDDLE	GRILLE POUR CHEMINÉE	KAMINROST	982.012.00		1	1	1	1		
209	PIEDINO	FOOT	PIED	STELLFUSS	912.090.00		4	4	4	4	FROM: 15.12.2011	TO: 17.05.2013
					912.090.14		4	4	4	4	FROM: 18.05.2013	TO:...
210	SERIGRAFIA	SCREEN PRINT	SÉRIGRAPHIE	SIEBDRUCK	910.193.00		1	1				
					910.871.00				1	1		
211	SERIGRAFIA TERMOSTATO	THERMOSTAT SCREEN PRINT	SÉRIGRAPHIE THERMOSTAT	SIEBDRUCK DES THERMOSTAT	910.175.00		1	1	1	1		
212	PORTA	DOOR	PORTE	TÜR	910.297.00		1	1	1	1		
212a	CERNIERA	JOINT	CHARNIERE	SCHARNIER	684.030.00	*	2	2	2	2		
213	PORTARULLINO	ROLL HOLDER	PORTE-AIGUILLE DE ROULEMENT	ROLLE-TRÄGER	684.011.00	*	2	2	2	2		
214												
215												
216												
217												
218												
219												
220												
221												
222												
223												
224												
225												
226												
227												
228												
229												
230												
231												
232												
233												
234												