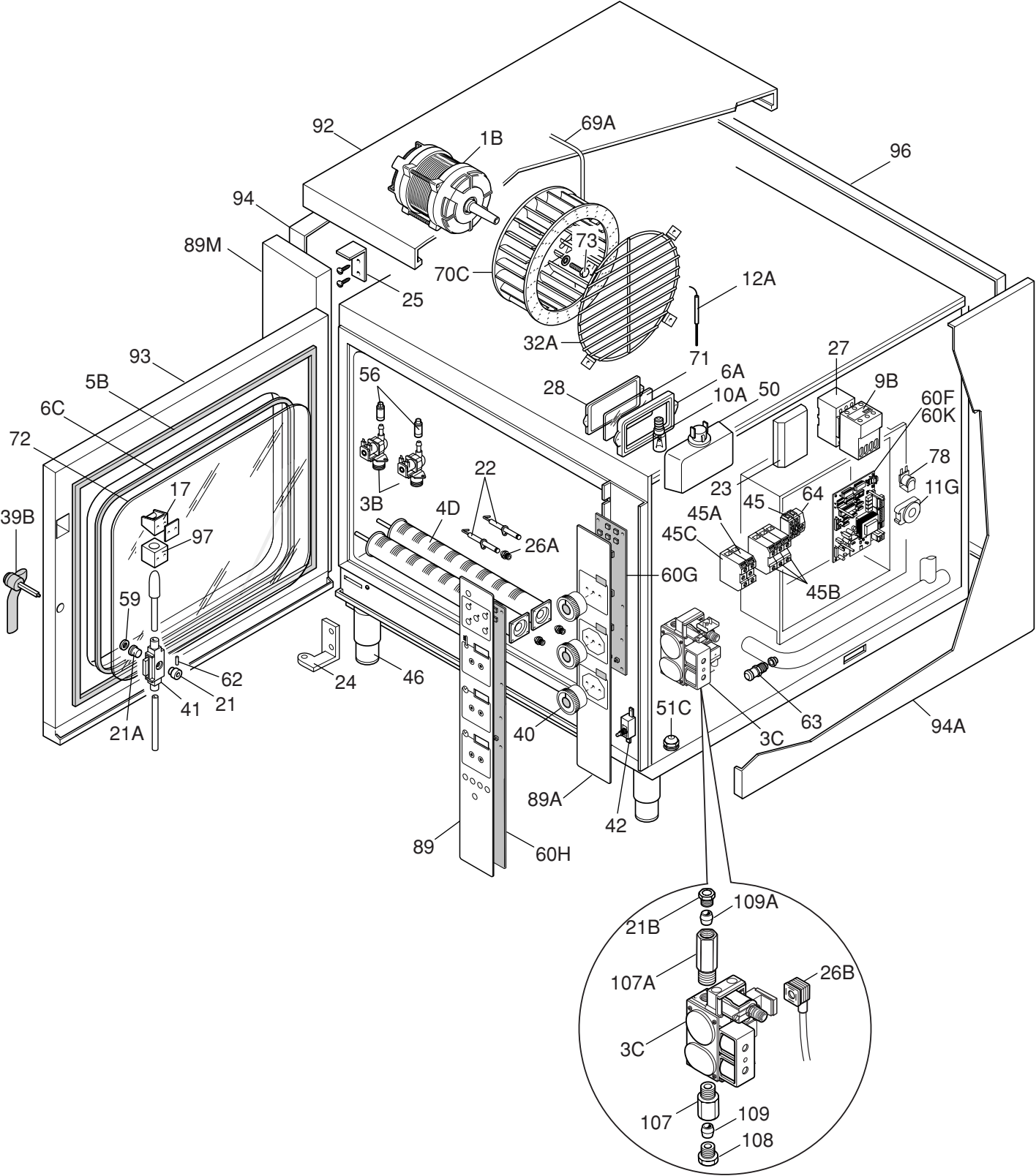
92
1B
69A
96
94
89M
73
70C
25
12A
32A
71
93
5B
6C
72
56
28
6A
10A
50
27
9B
60F
60K
78
11G
22
17
3B
4D
23
45
64
45A
45C
39B
97
26A
60G
45B
59
62
24
46
21
41
21A
40
51C
3C
63
94A
89A
42
89
60H
109A
21B
107A
26B
3C
107
109
108