Modello/Type: **60/90 CFE - 60/90 CFE/P**

cod./num. 2531333.00

data/date: 09/05/2013

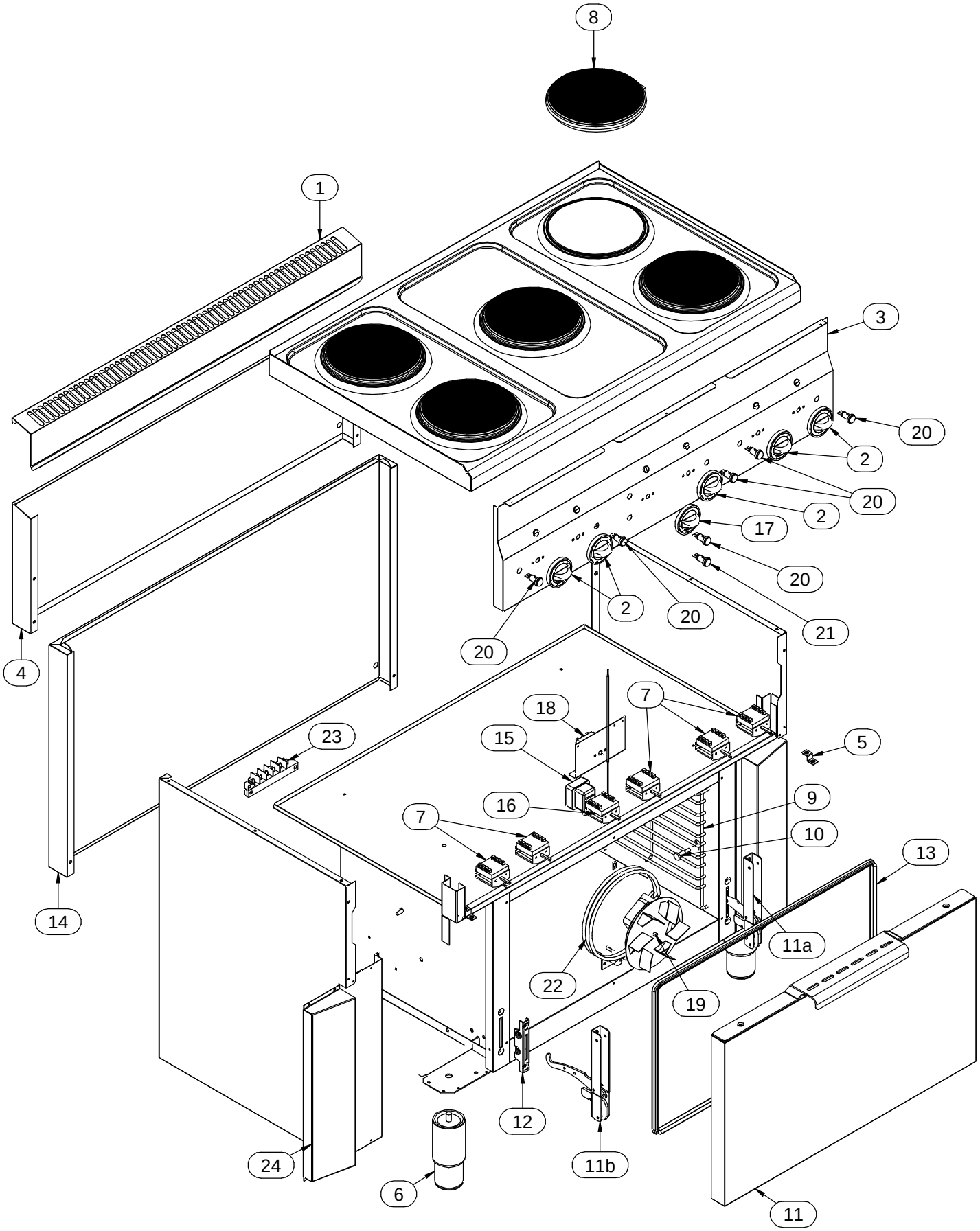

Modello Type:	60/90 CFE				cod. / num.	2531334.00
					data / date	07/05/2013
POS. ITEM	CODICE CODE	DESCRIZIONE	DESCRIPTION	DENOMINATION	BENENNUNG	NOTE / NOTES
1	6111259.00	ALZATINA	UPSTAND	DOSSERET	AUFKANTUNG	
2	612.002.00	MANOPOLA	KNOB	BOUTON	DREHKNOPF	
3	256.031.00	CRUSCOTTO	CONTROL PANEL	BANDEAU	BEDIENBLENDE	
4	6211254.00	PANNELLO POSTERIORE	BACK PANEL	PANNEAU POSTERIEUR	HINTERBRETT	
5	256.002.00	STAFFA FISSAGGIO CRUSCOTTO	CONTROL PANEL FIXING BRACKET	EQUERRE FIXATION BANDEAU	BEFESTIGUNGSWINKEL BEDIENBLENDE	
6	912.033.00	PIEDINO	FOOT	PIED	STELLFUSS	
7	661.002.00	COMMUTATORE	CHANGE-OVER SWITCH	COMMUTATEUR	UMSCHALTER	
8	665.059.00	PIASTRA ELETTRICA	ELECTRIC PLATE	PLAQUE ELECTRIQUE	ELEKTROKOCHPLATTE	
9	683.015.00	REGGIGRIGLIA	TRAY RACK	PORTE-PLAQUES	EINHÄNGEGESTELL	
10	641.013.00	FISSAGGIO REGGIGRIGLIA	TRAY RACK FIXING	FIXAGE PORTE-PLAQUES	BEFESTIGUNG DES EINHÄNGEGESTELLS	
11	610.185.00	PORTA	DOOR	PORTE	TÜR	
11a	684.009.00	CERNIERA	JOINT	CHARNIERE	SCHARNIER	
11b	684.010.00	CERNIERA	JOINT	CHARNIERE	SCHARNIER	
12	684.011.00	PORTARULLINO	ROLL HOLDER	PORTE-AIGUILLE DE ROULEMENT	ROLLE-TRÄGER	
13	652.014.00	GUARNIZIONE	WASHER	GUARNITURE	DICHTUNGSRING	
14	6211258.00	PANNELLO POSTERIORE	BACK PANEL	PANNEAU POSTERIEUR	HINTERBRETT	
15	661.027.00	TERMOSTATO	THERMOSTAT	THERMOSTAT	THERMOSTAT	
16	661.000.00	COMMUTATORE	CHANGE-OVER SWITCH	COMMUTATEUR	UMSCHALTER	
17	612.003.00	MANOPOLA	KNOB	BOUTON	DREHKNOPF	
18	661.045.00	TERMOSTATO SICUREZZA	SAFETY THERMOSTAT	THERMOSTAT DE SECURITE	TEMPERATURBEGRENZER	

Modello Type:	60/90 CFE				cod. / num.	2531334.00
					data / date	07/05/2013
POS. ITEM	CODICE CODE	DESCRIZIONE	DESCRIPTION	DENOMINATION	BENENNUNG	NOTE / NOTES
19	M569010100	MOTORE VENTILATORE	MOTOR VENTILATOR	MOTEUR VENTILATEUR	MOTOR LUEFTERRAD	
20	663.043.00	SPIA VERDE	GREEN INDICATOR LIGHT	LAMPE TEMOIN VERTE	GRUENE KONTROLLAMPE	
21	663.044.00	SPIA ARANCIO	ORANGE INDICATOR LIGHT	LAMPE TEMOIN ORANGE	ORANGE KONTROLLAMPE	
22	665.093.00	RESISTENZA	HEATING ELEMENT	RESISTANCE	HEIZKOERPER	
23	M566050500	MORSETTIERA	TERMINAL BOARD	BORNES	KLEMMENBRETT	
24	6211543.00	TAMPONAMENTO	RANGE CLADDING	BOUCHAGE CUISINIERE	GASHERDE ZUSTOPFEN	
25						
26						
27						
28						
29						
30						
31						
32						
33						
34						
35						
36						
37						
38						