DESPIECE TECNICO

Marmitas a vapor
Steam boling pans
Marmites à vapeur
Dampf -Kochkessel
Pentole a vapore
Marmitas a vapor

GAMA 900

Modelos:

MV9-10 BM
MV9-15 BM

Marzo 2009 March

Revisado Mayo 2014 May Revised

FAGOR

FAGOR INDUSTRIAL

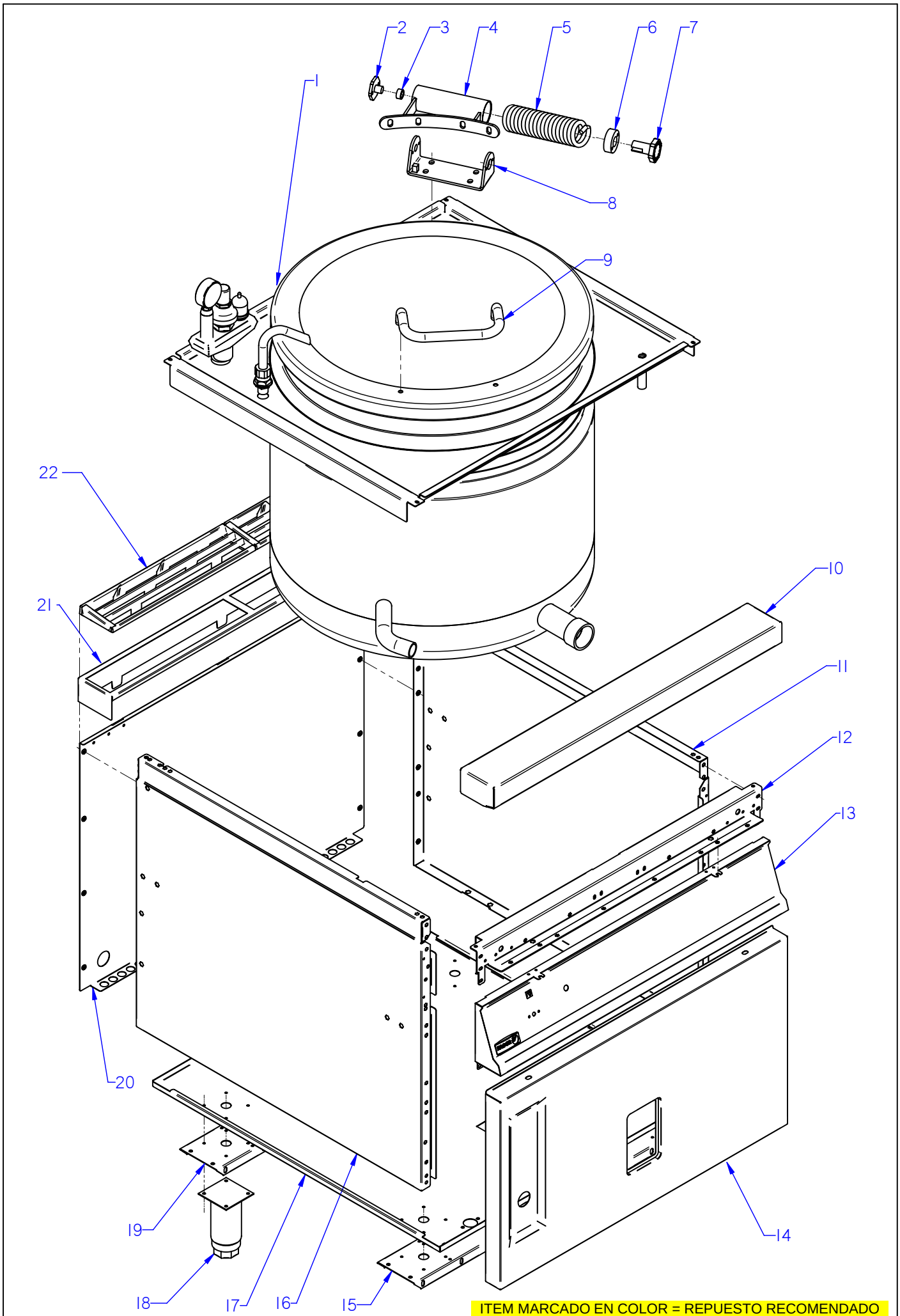

ITEM MARCADO EN COLOR = REPUESTO RECOMENDADO
COLOURED ITEM = RECOMMENDED SPARE PART

N plano	Firma	Fecha	Aparato	MUEBLE	Lamina	
C-2280		2009-03	MARMITA MV9-10 BM; MV9-15 BM		1	Fagor Industrial S.Coop. FAGOR Oñate

MOD.	MARMITAS GAMA 900 / PAN 900 RANGE	ZONA	MUEBLE / UNIT	PLANO	C-2280

ITEM	CODIGO	DENOMINACION	TEXTO	MV9-10 BM	MV9-15 BM							NOTAS
1	S516111000	CUBA+TAPA MV9-10 BM	CUBA+TAPA MV9-10 BM	1	_							
1	S506121000	CUBA+TAPA MV9-15 BM	TUB+COVER MV9-15 BM	_	1							
S/Nº	S036141000	TAPA COMPLETA	COMPLETE COVER	1	1							
S/Nº	S016101000	FILTRO DE CUBA	TUB FILTER	1	1							
	S036117000	SOPORTE FILTRO	FILTER SUPPORT	2	2							
	Q412000000	REMACHE TUBULAR 4x8	TUBULAR RIVET 4x8	8	8							
2	S116119000	GIRO DE ASA	HANDLE ROTATION	1	1							
	Q012041000	TORNILLO EXAGONAL M6x10 A304	HEXAGONAL BOLT M6x10 A304	2	2							
3	S116126000	COJINETE CILINDRICO	CYLINDRICAL BEARING	1	1							
4	S036143000	BISAGRA COMPLETA	COMPLETE HINGE	1	1							
5	S116121000	RESORTE TAPA 07199	SPRING COVER 07199	1	1							
6	S116118000	CASQUILLO	BUSHING	1	1							
7	S116120000	TENSOR MUELLE	TENSIONING SPRING	1	1							
	Q012042000	TORNILLO EXAGONAL M6x15	HEXAGONAL BOLT M6x15	2	2							
	Q262040000	ARANDELA GROW. A6 A304	WASHER GROW. A6 A304	2	2							
8	S036131000	SOPORTE BISAGRA COMPLETA	COMPLETE HINGE SUPPORT	1	1							ELIMINADO 03.05.10
8	S226136000	SOPORTE BISAGRA COMPLETA	COMPLETE HINGE SUPPORT	1	1							INTRODUCIDO 03.05.10
S/Nº	S026102000	REFUERZO BISAGRA MARMITAS	COOK. POT HINGE REINFORCE.	1	1							
	Q232050000	ARANDELA A8	WASHER A8	4	4							
	Q262050000	ARANDELA GROW. A8 A304	WASHER GROW. A8 A304	4	4							
	Q212051000	TUERCA SOMBRERO M8	COWL NUT M8	4	4							
9	S036123000	ASA DE TAPA	COVER HANDLE	1	1							
	Q012053000	TORNILLO EXAGONAL M8x20 A304	HEXAGONAL BOLT M8x20 A304	2	2							
	Q302027000	ARANDELA 25x8,4x2	WASHER 25X8.4X2	2	2							
	Q302027000	ARANDELA 25x8,4x2	WASHER 25X8.4X2	2	2							
10	S105402000	ANTERIOR DE MESA 1M	BENCH FRONT 1M	1	1							
	Q152004000	TORNILLO APLAST. M5x13 A304	MUSHROOM HEAD BOLT M5x13 A	2	2							
	Q302022000	ARANDELA 16x6x1,2 A304	WASHER 16x6x1.2 A304	2	2							

MOD.	MARMITAS GAMA 900 / PAN 900 RANGE	ZONA	MUEBLE / UNIT	PLANO	C-2280

ITEM	CODIGO	DENOMINACION	TEXTO	MV9-10 BM	MV9-15 BM							NOTAS
11	X162814000	PANEL LATERAL DERECHO G900	RIGHT SIDE PANEL G900	1	1							
	Q221343000	REMACHE EXAGONAL M6	HEXAGONAL RIVET M6	11	11							
	Q221342000	REMACHE EXAGONAL M5	HEXAGONAL RIVET M5	6	6							
	Q012053000	TORNILLO EXAGONAL M8x20 A304	HEXAGONAL BOLT M8x20 A304	2	2							
12	S222606000	ESCUADRA INTE. ANT. MESA	BENCH FRONT INT BRACKET	1	1							
13	S502803000	PORTAMANDOS MV9-00 BM	CONTROL HOLDER MV9-00 BM	1	1							
	Q152004000	TORNILLO APLAST. M5x13 A304	MUSHROOM HEAD BOLT M5x13 A	4	4							
	Q221343000	REMACHE EXAGONAL M6	HEXAGONAL RIVET M6	2	2							
	Q151336000	TORNILLO SOPORTE GUIAS	GUIDE SUPPORT BOLT	2	2							
	Q302022000	ARANDELA 16x6x1,2 A304	WASHER 16x6x1.2 A304	2	2							
	U022836000	ESCUDO FAGOR	FAGOR EMBLEM	1	1							
	Q221023000	CLIP SUJECIÓN RÁPIDA Ø 5	RAPID FASTENING CLIP Ø5	2	2							
14	S182807000	PANEL FRONTAL MV9-10	FRONT PANEL MV9-10	1	_							
14	S502805000	PANEL FRONTAL MV9-15 BM	FRONT PANEL MV9-15 BM	_	1							
	Q012042000	TORNILLO EXAGONAL M6x15	HEXAGONAL BOLT M6x15	2	2							
	Q302022000	ARANDELA 16x6x1,2 A304	WASHER 16x6x1.2 A304	2	2							
15	S102610000	LISTON SOPORTE PATAS ANT. 1M	FRONT LEG SUPPORT STRIP 1M	1	1							ELIMINADO 29.04.13
15	12005781	LISTON SOPORTE PATAS ANT. 1M	FRONT LEG SUPPORT STRIP 1M	1	1							INTRODUCIDO 29.04.13
16	X162813000	PANEL LATERAL IZQUIERDO G900	LEFT SIDE PANEL G900	1	1							
	Q221343000	REMACHE EXAGONAL M6	HEXAGONAL RIVET M6	11	11							
	Q221342000	REMACHE EXAGONAL M5	HEXAGONAL RIVET M5	6	6							
	Q012053000	TORNILLO EXAGONAL M8x20 A304	HEXAGONAL BOLT M8x20 A304	2	2							
17	S502604000	BASE INFERIOR MV900	LOWER BASE MV900	1	1							
	Q221343000	REMACHE EXAGONAL M6	HEXAGONAL RIVET M6	2	2							
18	X260151000	PATA REGULABLE	ADJUSTABLE LEG	4	4							
	Q411304000	REMACHE AVIBULB Ø4,8	AVIBULB RIVET Ø4.8	16	16							
19	S102611000	LISTON SOPORTE PATAS POS.1M	REAR LEG SUPPORT STRIP 1M	1	1							ELIMINADO 29.04.13
19	12005782	LISTON SOPORTE PATAS POS.1M	REAR LEG SUPPORT STRIP 1M	1	1							INTRODUCIDO 29.04.13
	Q012042000	TORNILLO EXAGONAL M6x15	HEXAGONAL BOLT M6x15	8	8							
	Q302022000	ARANDELA 16x6x1,2 A304	WASHER 16x6x1.2 A304	8	8							
	Q232040000	ARANDELA A6	WASHER A6	8	8							

MOD.	MARMITAS GAMA 900 / PAN 900 RANGE	ZONA	MUEBLE / UNIT	PLANO	C-2280

ITEM	CODIGO	DENOMINACION	TEXTO	MV9-10 BM	MV9-15 BM							NOTAS
20	U562853000	PANEL POSTERIOR 1M G9-00	REAR PANEL 1M G9-00	1	1							
	Q419005000	REMACHE 4x8 ALMG3 / ALUMINIO	RIVET 4X8 ALMG3 / ALUMINIUM	8	8							
21	R205439000	SOPORTE EMBELLECEDOR 1M	TRIM SUPPORT 1M	1	1							
22	R205425000	EMBELLECEDOR ESMALTE	ENAMEL TRIM	2	2							

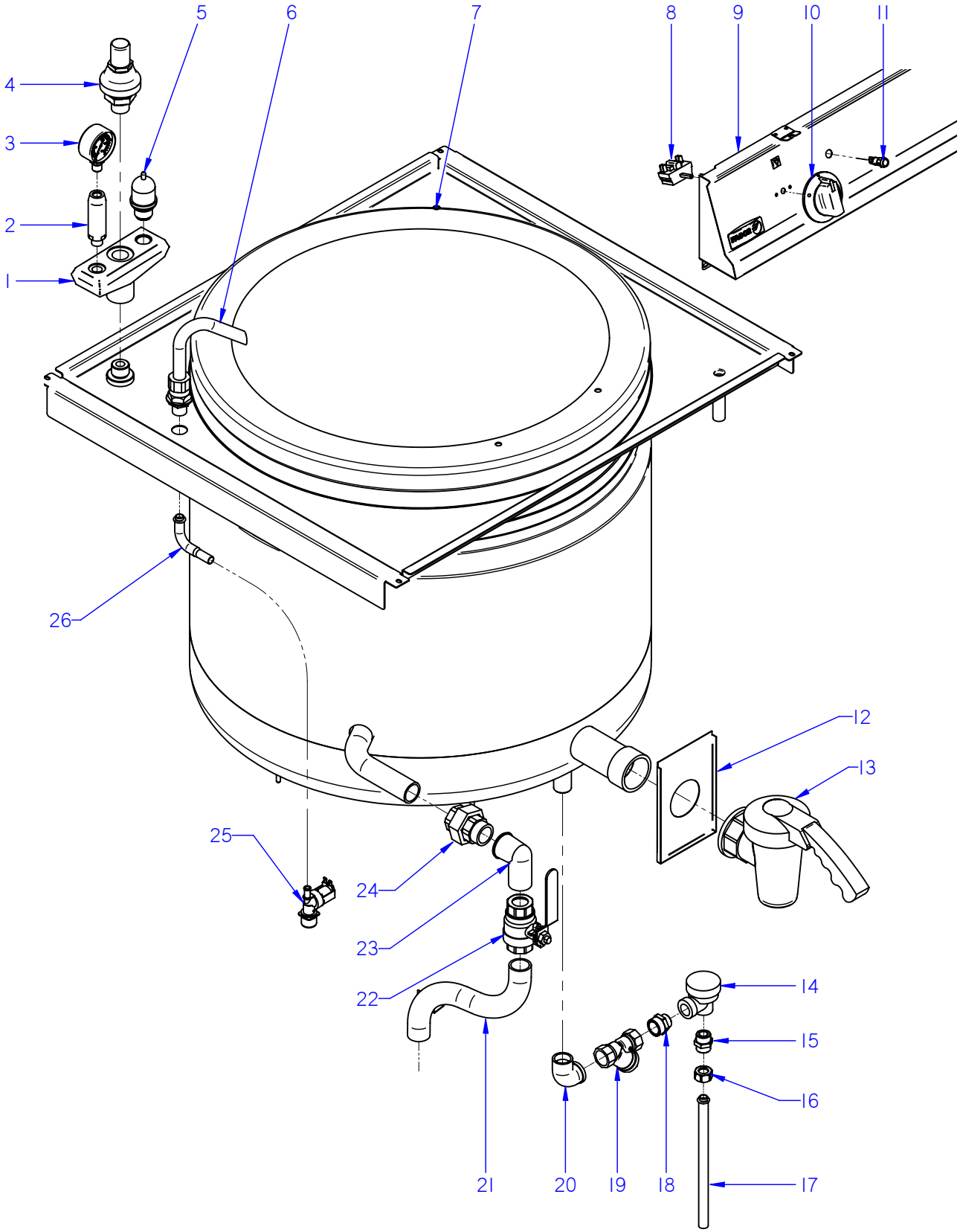

ITEM MARCADO EN COLOR = REPUESTO RECOMENDADO
COLOURED ITEM = RECOMMENDED SPARE PART

N plano	Firma	Fecha	Aparato	CONJUNTO FUNCIONAL	Lamina	
C-2281		2009-03	MARMITA MV9-10 BM; MV9-15 BM		2	Fagor Industrial S.Coop. FAGOR Oñate

MOD.	MARMITAS GAMA 900 / PAN 900 RANGE	ZONA	CONJUNTO FUNCIONAL / FUNCTIONAL UNIT	PLANO	C-2281

ITEM	CODIGO	DENOMINACION	TEXTO	MV9-10 BM	MV9-15 BM							NOTAS
1	S022100000	SOPORTE 3 SALIDAS 22805062	3-OUTPUT SUPPORT 22805062	1	1							
	Q306063000	ARANDELA Ø34x26,7x1,5	WASHER Ø34x26.7x1.5	1	1							
2	S022102000	PORTAMANOMETRO 2210617	MANOMETERHOLDER 2210617	1	1							
	Q306066000	ARANDELA Ø23,9x16,6x3	WASHER Ø23.9X16.6X3	1	1							
3	9220815000	MANOMETRO 36303601	MANOMETER 36303601	1	1							
4	S022101000	VALVULA SEGURIDAD 01508004	SAFETY VALVE 01508004	1	1							
	Q306063000	ARANDELA Ø34x26,7x1,5	WASHER Ø34x26.7x1.5	1	1							
5	S022103000	VALVULA PRESION 01509004	PRESSURE VALVE 01509004	1	1							
	Q306064000	ARANDELA Ø29,8x24,8x1,5	WASHER Ø29.8x24.8x1.5	1	1							
6	S052100000	TUBO LLENADO 01102113	FILLER PIPE 01102113	1	1							
7	S516113000	CUBA COMPLETA MV9-10 BM	COMPLETE TUB MV9-10 BM	1	_							
7	S506122000	CUBA COMPLETA MV9-15 BM	COMPLETE TUB MV9-15 BM	_	1							
8	T343008000	CONMUTADOR HGC	SWITCH HGC	1	1							
9	S502803000	PORTAMANDOS MV9-00 BM	CONTROL HOLDER MV9-00 BM	1	1							
10	X022133000	MANDO AGUA MARMITA Ø 6	WATER PAN CONTROL Ø 6	1	1							
11	X143018000	PILOTO AMBAR SARTEN	FRYING PAM AMBER PILOT	1	1							ELIMINADO 01.02.13
11	12024669	PILOTO AMBAR Ø18	AMBER PILOT Ø18	1	1							INTRODUCIDO 01.02.13
12	S112803000	CUBIERTA GRIFO MG-900	TAP COVER MG-900	1	1							
S/Nº	S112105000	MUELLE MV9-00	SPRING MV9-00	1	1							
13	S102125000	GRIFO VACIADO 2"	DRAINAGE TAP 2"	1	1							
14	S502102000	GRIFO CONDENSAC. BPT13AX 1/2	CONDENS. TAP BPT13AX 1/2	1	1							
15	S205023000	MANGUITO DOBLE 1/2	DOUBLE SLEEVE 1/2	1	1							
16	Q223010000	TUERCA 1/2 GAS	NUT 1/2 GAS	1	1							
	Q306024000	JUNTA18X12.5X1.5	SEAL 18X12.5X1.5	1	1							
17	H315014000	TUBO ANTERIOR DESAGÜE	DRAINAGE PIPE	1	1							
18	S502106000	MANGUITO DOBLE 3/4"- 1/2"	DOUBLE SLEEVE 3/4"- 1/2"	1	1							ELIMINADO 22,10,12
18	12046984	MANGUITO DOBLE 1/2"-3/4"	DOUBLE SLEEVE 1/2"-3/4"	1	1							INTRODUCIDO 22,10,12
19	Z102308000	FILTRO 3/4	FILTER 3/4"	1	1							
	R205062000	TUERCA CIEGA 1/2"	1/2" NUT	1	1							
	Q306053000	ARANDELA TAPON 18.5X3	18.5X3 WASHER	1	1							
20	Z718421000	CODO M-H 3/4" LATON	L-BEND M-H 3/4" BRASS	1	1							

MOD.	MARMITAS GAMA 900 / PAN 900 RANGE	ZONA	CONJUNTO FUNCIONAL / FUNCTIONAL UNIT	PLANO	C-2281

ITEM	CODIGO	DENOMINACION	TEXTO	MV9-10 BM	MV9-15 BM							NOTAS
21	S185006000	CONDUCCION ENTRADA VAPOR	STEAM INPUT PIPE	1	1							ELIMINADO 30.06.09
21	S185012000	CONDUCCION ENTRADA VAPOR	STEAM INPUT PIPE	1	1							INTRODUCIDO 30.06.09
	Q221343000	REMACHE EXAGONAL M6	HEXAGONAL RIVET M6	1	1							
	Q012042000	TORNILLO EXAGONAL M6X15	HEXAGONAL BOLT M6x15	1	1							
	Q302022000	ARANDELA 16X6X1.2 A.304	WASHER 16X6X1.2 A.304	1	1							
22	S502103000	VALVULA ESFERA PASO TOTAL	SPHERICAL VALVE TOTAL PASS	1	1							
23	S502105000	CODO MACHO-HEMBRA 1"	MALE-FEMALE L-BEND 1"	1	1							
24	S502104000	RACOR EMPALME DE 1	CONNECTION 1	1	1							
25	Z701135000	ELECTROVALVULA SIMP. 220V	SIMPLE SOLENOID VALVE 220V	1	1							
	S222645000	PROT. ELECTROVALVULA M900	SOLENOID PROTECTION M900	1	1							INTRODUCIDO 01.12.09
	S222646000	TAPA PROTEC. ELECTR. M900	PROT. COVER SOLENOID M900	1	1							INTRODUCIDO 01.12.09
	Z601156000	REGULADOR 8L RO. 254.034	REGULATOR 8L RED 254.034	3	3							ELIMINADO 11,11,13
	12096626	REGULADOR 8 L (ROJO)	REGULATOR 8 L (RED)	3	3							INTRODUCIDO 11,11,13
	Q032021000	TORNILLO ALOMADO M4X10	CURVED SCREW M4X10	4	4							
S/Nº	3676900000	TUBO GOMA NEGRA Ø 17*10	BLACK RUBBER PIPE 17*10	1	1							
	Q881308000	ABRAZADERA 8-14L	CLAMP 8-14L	2	2							
26	S565027000	TUBO ENTRADA TUBO LLENADO	INTAKE PIPE FILLER PIPE	1	1							
	Q306024000	JUNTA18X12.5X1.5	SEAL 18X12.5X1.5	1	1							
S/Nº	12024115	MANGUERA ENTRADA AGUA	WATER INTAKE HOSE	2	2							INTRODUCIDO 12,09,11

MOD.	MARMITAS GAMA 900 / PAN 900 RANGE	ZONA	VARIOS / VARIOUS	PLANO	

ITEM	CODIGO	DENOMINACION	TEXTO	MV9-10 BM	MV9-15 BM							NOTAS
	S246501000	FOLLETO DE INSTRUCCIONES MV	INSTRUCTION LEAFLET MV	1	1							
	S593002000	ESQUEMA TEORICO ADHESIVO	THEOR. DIAGRAM LABEL	1	1							PLANO HB-80044
	S593003000	CABLEADO MARMITA MV7-10 BM	PAN WIRING MV7-10 BM	1	1							

MOD.	MARMITAS GAMA 900 / PAN 900 RANGE	ZONA	REPUESTOS RECOMENDADOS RECOMMENDED SPARE PART	PLANO	

ITEM	CODIGO	DENOMINACION	TEXTO	MV9-10 BM	MV9-15 BM							NOTAS
5	S116121000	RESORTE TAPA 07199	SPRING COVER 07199	1	1							C-2280
3	9220815000	MANOMETRO 36303601	MANOMETER 36303601	1	1							C-2281
4	S022101000	VALVULA SEGURIDAD 01508004	SAFETY VALVE 01508004	1	1							C-2281
5	S022103000	VALVULA PRESION 01509004	PRESSURE VALVE 01509004	1	1							C-2281
8	T343008000	CONMUTADOR HGC	SWITCH HGC	1	1							C-2281
11	12024669	PILOTO AMBAR Ø18	AMBER PILOT Ø18	1	1							C-2281
13	S102125000	GRIFO VACIADO 2"	DRAINAGE TAP 2"	1	1							C-2281
14	S502102000	GRIFO CONDENSAC. BPT13AX 1/2	CONDENS. TAP BPT13AX 1/2	1	1							C-2281
19	Z102308000	FILTRO 3/4	FILTER 3/4"	1	1							C-2281
22	S502103000	VALVULA ESFERA PASO TOTAL	SPHERICAL VALVE TOTAL PASS	1	1							C-2281
25	Z701135000	ELECTROVALVULA SIMP. 220V	SIMPLE SOLENOID VALVE 220V	1	1							C-2281

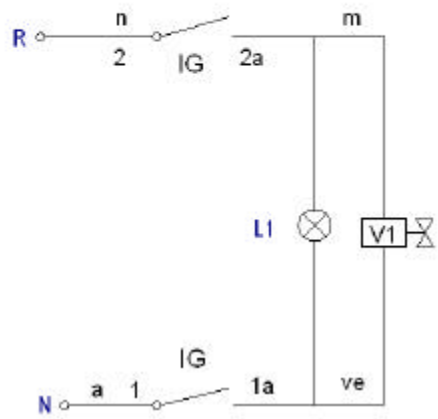

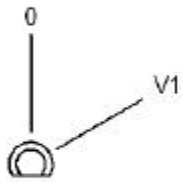

IG	1 1a	2 2a
0		
V1	X	X

a=azul-blue
n=negro-black-noir
m=marron-brown-marron
ve=verde-green-vert

IG = Interruptor general
L1 = Lampara funcionamiento
V1 = Valvula Agua Caliente

S593002000

-	Eskema teorikoa: MV7-10 BM	-	-	S593002000	-
ZkJN°	Pieza	Cant.	Materiala/Material	Klas. zk/N° Clas.	Gainazal akabera/Tratamiento
ZkJN°	Aldaketa/Modificaciones		Nork. proposatua/Propuesta de	Data/Fecha	Perdoi orokorrak Tolerancias generales < 5 ± 0.2 50 - 100 ± 0.8 5 ÷ 25 ± 0.4 >100± 1 25 ÷ 50 ± 0.6 α ± 1
-	-	-	-	-	
-	-	-	-	-	
-	-	-	-	-	
-	-	-	-	-	
-	-	-	-	-	

	Sinadura/Firma	Data/Fecha
Marraztua/Dibujado	ecarrascal	2007-12-11
Proiektatua/Proyectado	ecarrascal	2007-12-11
Egiaztatua/Comprobado	[signature]	2007-12-11

Eskala/Escala -

FAGOR
Fagor Industrial/Coop.Elk, Mugatua

MARMITAK

Plano hau ezin daiteke erabili, ez berriztatu, gure baimenik gabe.

Gainazal perdoia
Mecanizado superficial
—

Plano Zk./Plano N°
HB-80044

-	Zk. ord. du
-	Zk.gaitik ord.

Simb/LENG		ESPAÑOL	ENGLISH	FRANÇAIS	DEUTSCH	ITALIANO
C1, C2	=	Contactor Calentamiento	Contacteur Chauffe	Heating Contactor	Heizschütz	Contatore Riscaldamento
CN	=	Control de Nivel de agua	Control of water Level	Commande de niveau d'eau	Steuerung des Wasserspiegeles	Controllo del livello d'acqua
E	=	Generador de Chispa	Spark generator	Générateur d'étincelle	Funkengenerator	Generatore della scintilla
IB	=	Micro tope bajada	Microswitch of lowered Limit	Microcontact de la limite abaissée	Mikroschalter der gesenkten Begrenzung	Microinterruttore del limite abbassato
IG	=	Interruptor general	General switch	Commutateur général	Allgemeiner Schalter	Interruttore generale
IGV	=	Interruptor electrovalvulas de agua	Switch electrovalvula water	Commutez l'eau d'electrovalvula	Schalten Sie electrovalvula Wasser	Commuti l'acqua di electrovalvula
IE	=	Pulsador de Encendido	Ignition Switch	Commutateur d'allumage	Zündung-Schalter	Interruttore di accensione
IMB	=	Pulsador bajada	lowered switch	commutateur abaissé	gesenkter Schalter	interruttore abbassato
IMS	=	Pulsador subida	Raised switch	Commutateur augmenté	Angehobener Schalter	Interruttore sollevato
IP	=	Micro seguridad	security microswitch	microcontact de sécurité	Sicherheitsmikroschalter	microinterruttore di sicurezza
IS	=	Micro tope subida	Microswitch of rise Limit	Microcontact de la limite d'élévation	Mikroschalter der Aufstieg Begrenzung	Microinterruttore del limite di aumento
L1	=	Lámpara marcha	Operation Light	Lumière d'opération	Betriebs-Licht	Luce di funzionamento
L2	=	Lámpara calentamiento	Heating Light	Lumière de chauffage	Heizungs-Licht	Luce del riscaldamento
M	=	Motor de elevacion	Motor of elevation	Moteur d'altitude	Motor des Aufzugs	Motore dell'altezza
P	=	Presostato de Camara	Water Level Switch	Commutateur de niveau d'eau	Wasserspiegel-Schalter	Interruttore del livello d'acqua
PR	=	Puente rectificador	Electrical bridge rectifier	Pont redresseur électrique	Elektrischer Brückengleichrichter	Raddrizzatore a ponte elettrico
R	=	Resistencia Calentamiento.	Résistance Chauffe	Heating Resistors	Widerstand Aufheizung	Resistenza Riscaldamento
RE	=	Regulador Energia	Regulator of Energy	Régulateur d'énergie	Regler von Energie	Regolatore di energia
T	=	Termostato	Thermostat	Thermostat	Thermostat	Termostato
TRF	=	Transformador	Transformer	Transformateur	Transformator	Trasformatore
TS	=	Termostato de seguridad	Security Thermostat	Thermostat de sécurité	Sicherheits-Thermostat	Termostato di sicurezza
TRP	=	Termopar	Thermocouple	Thermocouple	Thermoelement	Termocoppia
VG1,VG2	=	ElectroVálvula gas	Electrical gas valve	Clapet à gaz électrique	Elektrisches Gichtventil	Valvola a gas elettrica
V1	=	Valvula Agua CALIENTE	ElectroValve of Hot Water	Électrovalve d'eau chaude	Elektroventil des Heißwassers	Elettrovalvola di acqua calda
V2	=	Valvula Agua FRIA	ElectroValve of cold Water	Électrovalve d'eau froide	Elektroventil des kalten Wassers	Elettrovalvola di acqua fredda
V3	=	Valvula Agua Caldera	electrovalve of water boiler	électrovalve de chauffe-eau	Elektroventil des Warmwasserboilers	elettrovalvola del reattore ad acqua
	=	**COLORES**	**COLOUR**	**COULEURS**	**FARBEN**	**COLORE**
a	=	Azul	Blue	Bleu	Blau	Blu
am	=	Amarillo	Yellow	Jaune	Gelb	Giallo
am/ve	=	Amarillo/verde	Yellow / green	Jaune / vert	Gelb/grün	Giallo/verde
b	=	Blanco	White	Blanc	Weiß	Bianco
g	=	Gris	Grey	Gris	Grau	Grigio
m	=	Marrón	Brown	Marron	Braun	Marrone
n	=	Negro	Black	Noir	Schwarz	Nero
na	=	Naranja	Orange	Orange	Orange	Arancio
r	=	Rojo	Red	Rouge	Rot	Rosso
rs	=	Rosa	Pink	Rose	Rosa	Roseo
ve	=	Verde	Green	Vert	Grün	Verde
vi	=	Violeta	Purple	Violet	Violett	Viola
						X463007000