# Marmitas
# Marmites
# Boiling Pans
# Kochkessel
# Pentole

## GAMA 900

## Modelos:

**MG9-10**
**MG9-15**
**MG9-20**
**MG9-15 S**
**MG9-10 S**
**MG9-20 S**

*Mayo 2006 May*

FAGOR

Fagor Industrial

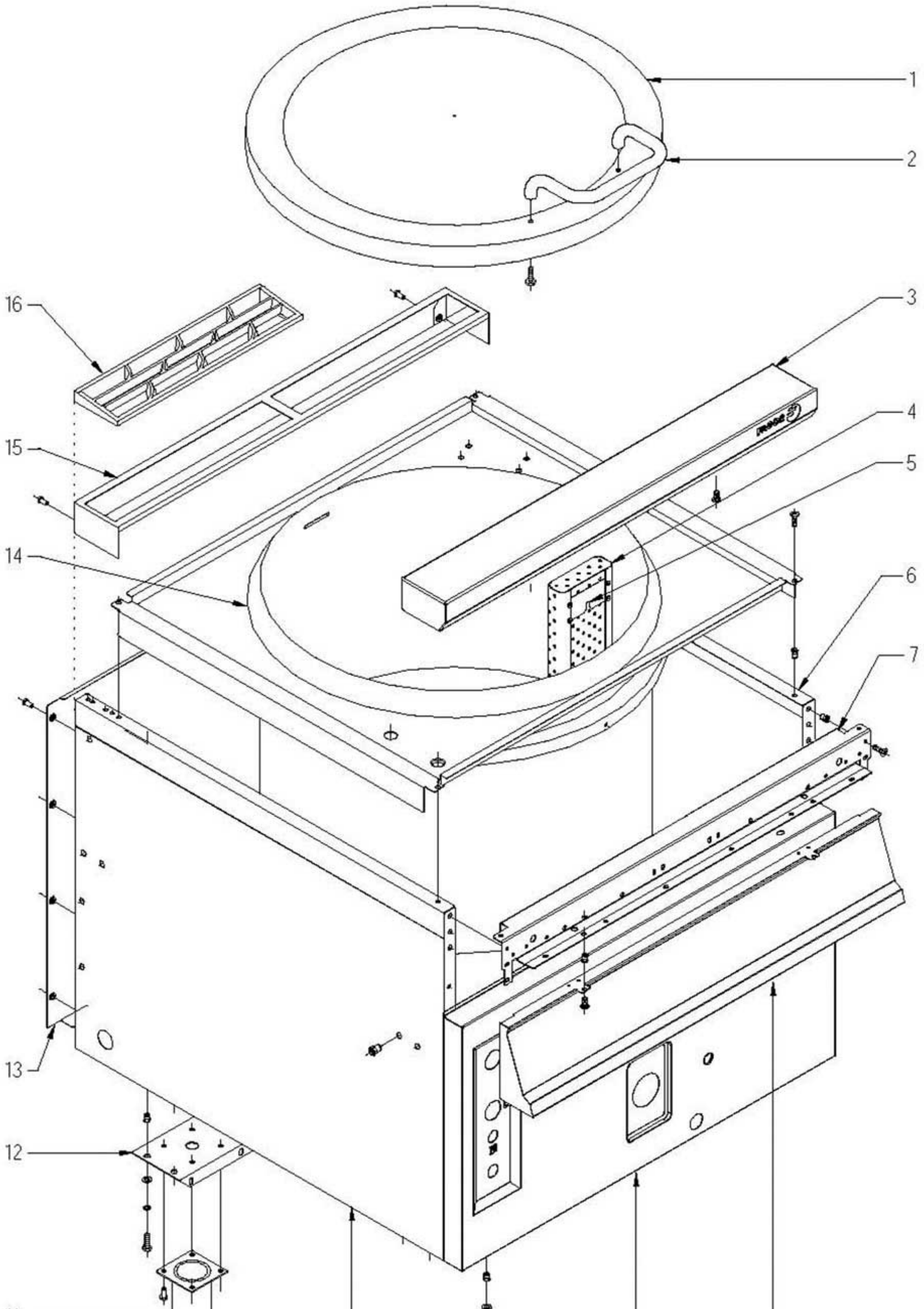


| Nplano | Firma | Fecha | Aparato | Lamina | |
|---|---|---|---|---|---|
| C-1692 | | 2006-05 | MUEBLE<br>MARMITA MG9-10, 15, 20 | 1 | Fagor Industrial S.Coop.<br>Onate |

| MOD. | MARMITAS GAMA 900 | | ZONA | MUEBLE | | | | | PLANO | C-1692 | | |
|---|---|---|---|---|---|---|---|---|---|---|---|---|
| ITEM | CODIGO | DENOMINACION | TEXTO | MG9-10 | MG9-15 | MG9-20 | MG9-10 S | MG9-15 S | MG9-20 S | | | NOTAS |
| 1 | S036141000 | TAPA COMPLETA | | 1 | 1 | 1 | 1 | 1 | 1 | | | |
| | Q152004000 | TORNILLO APLAST. M5x13 A304 | | 4 | 4 | 4 | 4 | 4 | 4 | | | |
| | Q221342000 | REMACHE EXAGONAL M5 | | 2 | 2 | 2 | 2 | 2 | 2 | | | |
| 2 | S036123000 | ASA DE TAPA | | 1 | 1 | 1 | 1 | 1 | 1 | | | |
| | Q012053000 | TORNILLO EXAGONAL M8x20 A304 | | 2 | 2 | 2 | 2 | 2 | 2 | | | |
| | Q302027000 | ARANDELA 25x8,4x2 | | 2 | 2 | 2 | 2 | 2 | 2 | | | |
| 3 | S105401000 | ANTERIOR DE MESA 1M | | 1 | 1 | 1 | _ | _ | _ | | | |
| | Q152004000 | TORNILLO APLAST. M5x13 A304 | | 2 | 2 | 2 | 2 | 2 | 2 | | | |
| | Q302022000 | ARANDELA 16x6x1,2 A304 | | 2 | 2 | 2 | 2 | 2 | 2 | | | |
| 4 | S016101000 | FILTRO DE CUBA | | 1 | 1 | 1 | 1 | 1 | 1 | | | |
| 5 | S036117000 | SOPORTE FILTRO | | 2 | 2 | 2 | 2 | 2 | 2 | | | |
| | Q412000000 | REMACHE TUBULAR 4x8 | | 8 | 8 | 8 | 8 | 8 | 8 | | | |
| 6 | X162811000 | PANEL LATERAL DERECHO G9-00 | | 1 | 1 | 1 | _ | _ | _ | | | |
| 6 | X192805000 | PANEL LATERAL DERECH.G9-00S | | _ | _ | _ | 1 | _ | _ | | | |
| 6 | S372812000 | PANEL LATERAL DERECH.G9-00S | | _ | _ | _ | _ | 1 | 1 | | | |
| | Q221343000 | REMACHE EXAGONAL M6 | | 4 | 4 | 4 | _ | _ | _ | | | |
| | Q221342000 | REMACHE EXAGONAL M5 | | 1 | 1 | 1 | 1 | 1 | 1 | | | |
| | Q221342000 | REMACHE EXAGONAL M5 | | 3 | 3 | 3 | 3 | 3 | 3 | | | |
| | Q221342000 | REMACHE EXAGONAL M5 | | 1 | 1 | 1 | 1 | 1 | 1 | | | |
| | Q221343000 | REMACHE EXAGONAL M6 | | 7 | 7 | 7 | _ | _ | _ | | | |
| | Q221345000 | REMACHE EXAGONAL M10 | | _ | _ | _ | 2 | 2 | 2 | | | |
| | Q162030000 | TUERCA EXAGONAL M5 | | _ | _ | _ | 2 | 2 | 2 | | | |
| 7 | U022601000 | ESCUADRA INTE.AMARRE ANT.1M | | 1 | 1 | 1 | 1 | 1 | 1 | | | |
| | Q221342000 | REMACHE EXAGONAL M5 | | 3 | 3 | 3 | 3 | 3 | 3 | | | |
| | Q152004000 | TORNILLO APLAST. M5x13 A304 | | 6 | 6 | 6 | 6 | 6 | 6 | | | |
| | Q221342000 | REMACHE EXAGONAL M5 | | 2 | 2 | 2 | 2 | 2 | 2 | | | |
| 8 | S222804000 | PORTAMANDOS COMPLETO | | 1 | 1 | 1 | 1 | 1 | 1 | | | |
| | Q152004000 | TORNILLO APLAST. M5x13 A304 | | 2 | 2 | 2 | 2 | 2 | 2 | | | |
| | | | | | | | | | | | | |
| | | | | | | | | | | | | |
| | | | | | | | | | | | | |

| MOD. | MARMITAS GAMA 900 | ZONA | MUEBLE | PLANO | C-1692 |
|---|---|---|---|---|---|

| ITEM | CODIGO | DENOMINACION | TEXTO | MG9-10 | MG9-15 | MG9-20 | MG9-10 S | MG9-15 S | MG9-20 S | | | NOTAS |
|---|---|---|---|---|---|---|---|---|---|---|---|---|
| 9 | S102801000 | PANEL FRONTAL MG9-10 | | 1 | _ | _ | _ | _ | _ | | | |
| 9 | S202801000 | PANEL FRONTAL MG9-15 | | _ | 1 | | _ | 1 | _ | | | |
| 9 | S252801000 | PANEL FRONTAL MG9-20 | | _ | _ | 1 | _ | _ | 1 | | | |
| 9 | S102802000 | PANEL FRONTAL MG9-10 S | | _ | _ | _ | 1 | _ | _ | | | |
| | Q012042000 | TORNILLO EXAGONAL M6x15 | | 2 | 2 | 2 | 2 | 2 | 2 | | | |
| | Q302022000 | ARANDELA 16x6x1,2 A304 | | 2 | 2 | 2 | 2 | 2 | 2 | | | |
| 10 | X162810000 | PANEL LATERAL IZDO. G9-00 | | 1 | 1 | 1 | _ | _ | _ | | | |
| 10 | X192803000 | PANEL LATERAL IZDO. G9-00 | | _ | _ | _ | 1 | _ | _ | | | |
| 10 | S372810000 | PANEL LATERAL IZDO. G9-00 | | _ | _ | _ | _ | 1 | 1 | | | |
| | Q221343000 | REMACHE EXAGONAL M6 | | 4 | 4 | 4 | _ | _ | _ | | | |
| | Q221342000 | REMACHE EXAGONAL M5 | | 1 | 1 | 1 | 1 | 1 | 1 | | | |
| | Q221342000 | REMACHE EXAGONAL M5 | | 3 | 3 | 3 | 3 | 3 | 3 | | | |
| | Q221342000 | REMACHE EXAGONAL M5 | | 1 | 1 | 1 | 1 | 1 | 1 | | | |
| | Q221343000 | REMACHE EXAGONAL M6 | | 7 | 7 | 7 | _ | _ | _ | | | |
| | Q221345000 | REMACHE EXAGONAL M10 | | _ | _ | _ | 2 | 2 | 2 | | | |
| | Q162030000 | TUERCA EXAGONAL M5 | | _ | _ | _ | 2 | 2 | 2 | | | |
| 11 | X260151000 | PATA REGULABLE | | 4 | 4 | 4 | _ | _ | _ | | | |
| | Q411304000 | REMACHE AVIBULB Ø4,8 | | 16 | 16 | 16 | _ | _ | _ | | | |
| 12 | S032631000 | LISTON SOPORTE PATAS 1M | | 2 | 2 | 2 | _ | _ | _ | | | |
| | Q012042000 | TORNILLO EXAGONAL M6x15 | | 8 | 8 | 8 | _ | _ | _ | | | |
| | Q302022000 | ARANDELA 16x6x1,2 A304 | | 8 | 8 | 8 | _ | _ | _ | | | |
| | Q232040000 | ARANDELA A6 | | 8 | 8 | 8 | _ | _ | _ | | | |
| 13 | U562853000 | PANEL POSTERIOR 1M G9-00 | | 1 | 1 | 1 | _ | _ | _ | | | |
| 13 | X242817000 | PANEL POSTERIOR 1M G9-10S | | _ | _ | _ | 1 | _ | _ | | | |
| 13 | S372816000 | PANEL POSTERIOR 1M G9-15 S | | _ | _ | _ | _ | 1 | 1 | | | |
| | Q419005000 | REMACHE 4x8 ALMG3 / ALUMINIO | | 8 | 8 | 8 | 6 | 8 | 8 | | | |
| 14 | S106119000 | CUBA COMPLETA MG9-10 | | 1 | _ | _ | 1 | _ | _ | | | |
| 14 | S206119000 | CUBA COMPLETA MG9-15 | | _ | 1 | _ | _ | 1 | _ | | | |
| 14 | S256104000 | CUBA COMPLETA MG9-20 | | _ | _ | 1 | _ | _ | 1 | | | |
| 15 | R205428000 | SOPORTE EMBELLECEDOR 1M | | 1 | 1 | 1 | 1 | 1 | 1 | | | |
| 16 | R205425000 | EMBELLECEDOR ESMALTE | | 2 | 2 | 2 | 2 | 2 | 2 | | | |

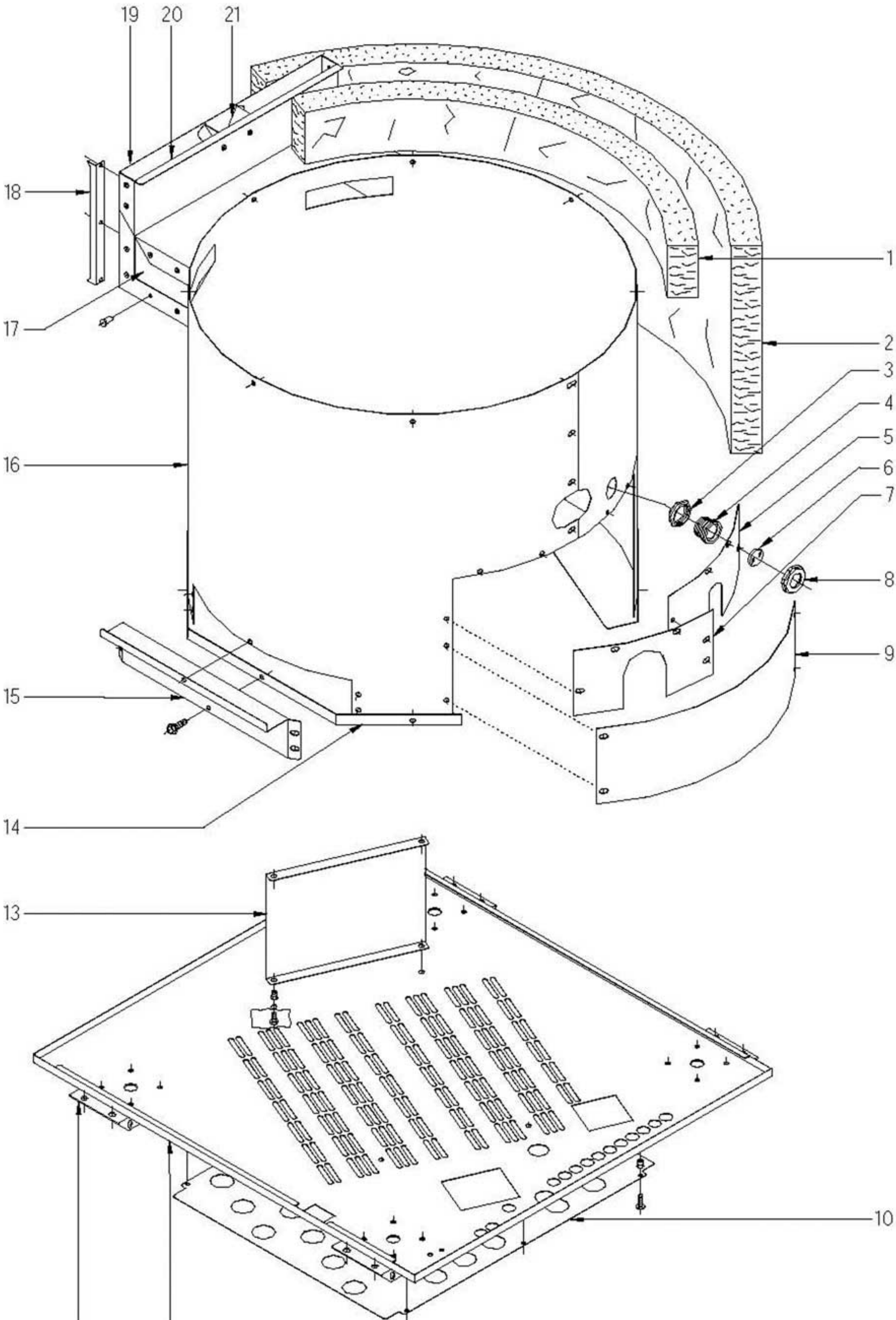


| Nplano | Firma | Fecha | Aparato | | Lamina | |
|---|---|---|---|---|---|---|
| C-1693 | | 2006-05 | PIEZAS INTERIORES<br>MARMITA MG9-10, 15, 20 | | 2 | Fagor Industrial S.Coop.<br>Oñate |

| MOD. | MARMITAS GAMA 900 | ZONA | PIEZAS INTERIORES | PLANO | C-1693 |
|---|---|---|---|---|---|

| ITEM | CODIGO | DENOMINACION | TEXTO | MG9-10 | MG9-15 | MG9-20 | MG9-10 S | MG9-15 S | MG9-20 S | | | NOTAS |
|---|---|---|---|---|---|---|---|---|---|---|---|---|
| 1 | S116403000 | AISLANTE 1300x100x25 | | 2 | 2 | 2 | 2 | 2 | 2 | | | |
| 2 | R092622000 | AISLANTE 1370x650x20 | | 2 | 2 | 2 | 2 | 2 | 2 | | | |
| 3 | Q223014000 | CONTRATUERCA 1 LATON | | 1 | 1 | 1 | 1 | 1 | 1 | | | |
| 4 | 9294500000 | PORTAMIRILLA LATON | | 1 | 1 | 1 | 1 | 1 | 1 | | | |
| 5 | S032648000 | TAPA INFERIOR DERECHO | | 1 | 1 | _ | 1 | 1 | _ | | | |
| 5 | S042656000 | TAPA INFERIOR DERECHO | | _ | _ | 1 | _ | _ | 1 | | | |
| | Q151323000 | TORNILLO BROCA 4,8x16 | | 4 | 4 | 4 | 4 | 4 | 4 | | | |
| 6 | 9294600000 | MIRILLA CRISTAL | | 1 | 1 | 1 | 1 | 1 | 1 | | | |
| 7 | S032647000 | TAPA INFERIOR IZQUIERDO | | 1 | 1 | _ | 1 | 1 | _ | | | |
| 7 | S042655000 | TAPA INFERIOR IZQUIERDO | | _ | _ | 1 | _ | _ | 1 | | | |
| | Q151323000 | TORNILLO BROCA 4,8x16 | | 4 | 4 | 4 | 4 | 4 | 4 | | | |
| | Q151323000 | TORNILLO BROCA 4,8x16 | | 2 | 2 | 2 | 2 | 2 | 2 | | | |
| 8 | 9294400000 | TUERCA CIERRE | | 1 | 1 | 1 | 1 | 1 | 1 | | | |
| 9 | S012632000 | TAPA INFERIOR MG9-10 | | 1 | _ | _ | _ | _ | _ | | | |
| 9 | S062609000 | TAPA INFERIOR MG9-10S | | _ | _ | _ | 1 | _ | _ | | | |
| | Q151323000 | TORNILLO BROCA 4,8x16 | | 4 | _ | _ | 4 | _ | _ | | | |
| 10 | S272610000 | PROTECCION SUELO | | _ | _ | 1 | _ | _ | _ | | | |
| | Q221342000 | REMACHE EXAGONAL M5 | | _ | _ | 6 | _ | _ | _ | | | |
| | Q152004000 | TORNILLO APLAST. M5x13 A304 | | _ | _ | 6 | _ | _ | _ | | | |
| 11 | S272606000 | BASE INFERIOR | | 1 | 1 | 1 | _ | _ | _ | | | |
| 11 | S062811000 | BASE INFERIOR MG9-10S | | _ | _ | _ | 1 | _ | _ | | | |
| 11 | S372818000 | BASE INFERIOR MG9-15S | | _ | _ | _ | _ | 1 | 1 | | | |
| | Q221343000 | REMACHE EXAGONAL M6 | | 2 | 2 | 2 | 2 | 2 | 2 | | | |
| | Q162030000 | TUERCA EXAGONAL M5 | | _ | _ | _ | 4 | 4 | 4 | | | |
| | Q221345000 | REMACHE EXAGONAL M10 | | _ | _ | _ | 2 | 2 | 2 | | | |
| | Q151356000 | TORNILLO EXAGONAL M10x110 | | _ | _ | _ | 2 | 2 | 2 | | | |
| | Q232060000 | ARANDELA A10 | | _ | _ | _ | 2 | 2 | 2 | | | |
| | | | | | | | | | | | | |
| | | | | | | | | | | | | |
| | | | | | | | | | | | | |
| | | | | | | | | | | | | |

| MOD. | MARMITAS GAMA 900 | ZONA | PIEZAS INTERIORES | PLANO | C-1693 |
|---|---|---|---|---|---|

| ITEM | CODIGO | DENOMINACION | TEXTO | MG9-10 | MG9-15 | MG9-20 | MG9-10 S | MG9-15 S | MG9-20 S | | | NOTAS |
|---|---|---|---|---|---|---|---|---|---|---|---|---|
| 12 | S032631000 | LISTON SOPORTE PATAS 1M | | 2 | 2 | 2 | _ | _ | _ | | | |
| | Q012042000 | TORNILLO EXAGONAL M6x15 | | 8 | 8 | 8 | _ | _ | _ | | | |
| | Q302022000 | ARANDELA 16x6x1,2 A304 | | 8 | 8 | 8 | _ | _ | _ | | | |
| | Q232040000 | ARANDELA A6 | | 8 | 8 | 8 | _ | _ | _ | | | |
| 13 | S012616000 | SOPORTE QUEMADOR | | 2 | _ | _ | _ | _ | _ | | | |
| 13 | S032639000 | SOPORTE QUEMADOR | | _ | 2 | _ | _ | 2 | _ | | | |
| 13 | S062606000 | SOPORTE QUEMADOR | | _ | _ | _ | 2 | _ | _ | | | |
| | Q012031000 | TORNILLO EXAGONAL M5x10 A304 | | 4 | 4 | _ | 4 | 4 | _ | | | |
| | Q221342000 | REMACHE EXAGONAL M5 | | 4 | 4 | _ | 4 | 4 | _ | | | |
| | Q221342000 | REMACHE EXAGONAL M5 | | 4 | 4 | _ | 4 | 4 | _ | | | |
| 14 | S032649000 | CIERRE ENVOLVENTE | | 1 | 1 | _ | 1 | 1 | _ | | | |
| 14 | S042651000 | CIERRE ENVOLVENTE | | _ | _ | 1 | _ | _ | 1 | | | |
| 15 | S272609000 | CIERRE LATERAL ENVOLVENTE | | _ | _ | 2 | _ | _ | 2 | | | |
| | Q151323000 | TORNILLO BROCA 4,8x16 | | _ | _ | 12 | _ | _ | 12 | | | |
| 16 | S012631000 | ENVOLVENTE MG9-10 | | 1 | _ | _ | _ | _ | _ | | | |
| 16 | S032646000 | ENVOLVENTE MG9-15 | | _ | 1 | _ | _ | 1 | _ | | | |
| 16 | S272611000 | ENVOLVENTE MG9-20 | | _ | _ | 1 | _ | _ | 1 | | | |
| 16 | S062608000 | ENVOLVENTE MG9-10 S | | _ | _ | _ | 1 | _ | _ | | | |
| | Q151323000 | TORNILLO BROCA 4,8x16 | | 8 | 8 | 8 | 8 | 8 | 8 | | | |
| | Q151323000 | TORNILLO BROCA 4,8x16 | | 7 | 7 | 7 | 7 | 7 | 7 | | | |
| | Q151323000 | TORNILLO BROCA 4,8x16 | | 4 | 4 | 4 | 4 | 4 | 4 | | | |
| 17 | S032641000 | AMARRE CHIMENEA LATERAL | | 2 | 2 | _ | 2 | 2 | _ | | | |
| 17 | S042631000 | AMARRE CHIMENEA LATERAL | | _ | _ | 2 | _ | _ | 2 | | | |
| | Q419005000 | REMACHE 4x8 ALMG3 / ALUMINIO | | 12 | 12 | 12 | 12 | 12 | 12 | | | |
| | Q151323000 | TORNILLO BROCA 4,8x16 | | 4 | 4 | 4 | 4 | 4 | 4 | | | |
| 18 | X162657000 | DISTANCIADOR DE CHIMENEA | | 2 | 2 | 2 | 2 | 2 | 2 | | | |
| | Q419005000 | REMACHE 4x8 ALMG3 / ALUMINIO | | 4 | 4 | 4 | 4 | 4 | 4 | | | |
| S/Nº | S032645000 | AISLANTE CALOR | | 1 | 1 | 1 | 1 | 1 | 1 | | | |
| | Q221342000 | REMACHE EXAGONAL M5 | | 2 | 2 | 2 | 2 | 2 | 2 | | | |
| | Q012031000 | TORNILLO EXAGONAL M5x10 A304 | | 2 | 2 | 2 | 2 | 2 | 2 | | | |
| | | | | | | | | | | | | |

| MOD. | MARMITAS GAMA 900 | ZONA | PIEZAS INTERIORES | PLANO | C-1693 |
|---|---|---|---|---|---|

| ITEM | CODIGO | DENOMINACION | TEXTO | MG9-10 | MG9-15 | MG9-20 | MG9-10 S | MG9-15 S | MG9-20 S | | | NOTAS |
|---|---|---|---|---|---|---|---|---|---|---|---|---|
| 19 | S032644000 | POSTERIOR DE CHIMENEA | | 1 | 1 | _ | 1 | 1 | _ | | | |
| 19 | S042628000 | POSTERIOR DE CHIMENEA | | _ | _ | 1 | _ | _ | 1 | | | |
| 20 | S032643000 | ANTERIOR DE CHIMENEA | | 1 | 1 | _ | 1 | 1 | _ | | | |
| 20 | S042629000 | ANTERIOR DE CHIMENEA | | _ | _ | 1 | _ | _ | 1 | | | |
| | Q419005000 | REMACHE 4x8 ALMG3 / ALUMINIO | | 4 | 4 | 4 | 4 | 4 | 4 | | | |
| 21 | S035400000 | PROTECTOR DE CHIMENEA | | 1 | 1 | 1 | 1 | 1 | 1 | | | |
| | Q419005000 | REMACHE 4x8 ALMG3 / ALUMINIO | | 4 | 4 | 4 | 4 | 4 | 4 | | | |

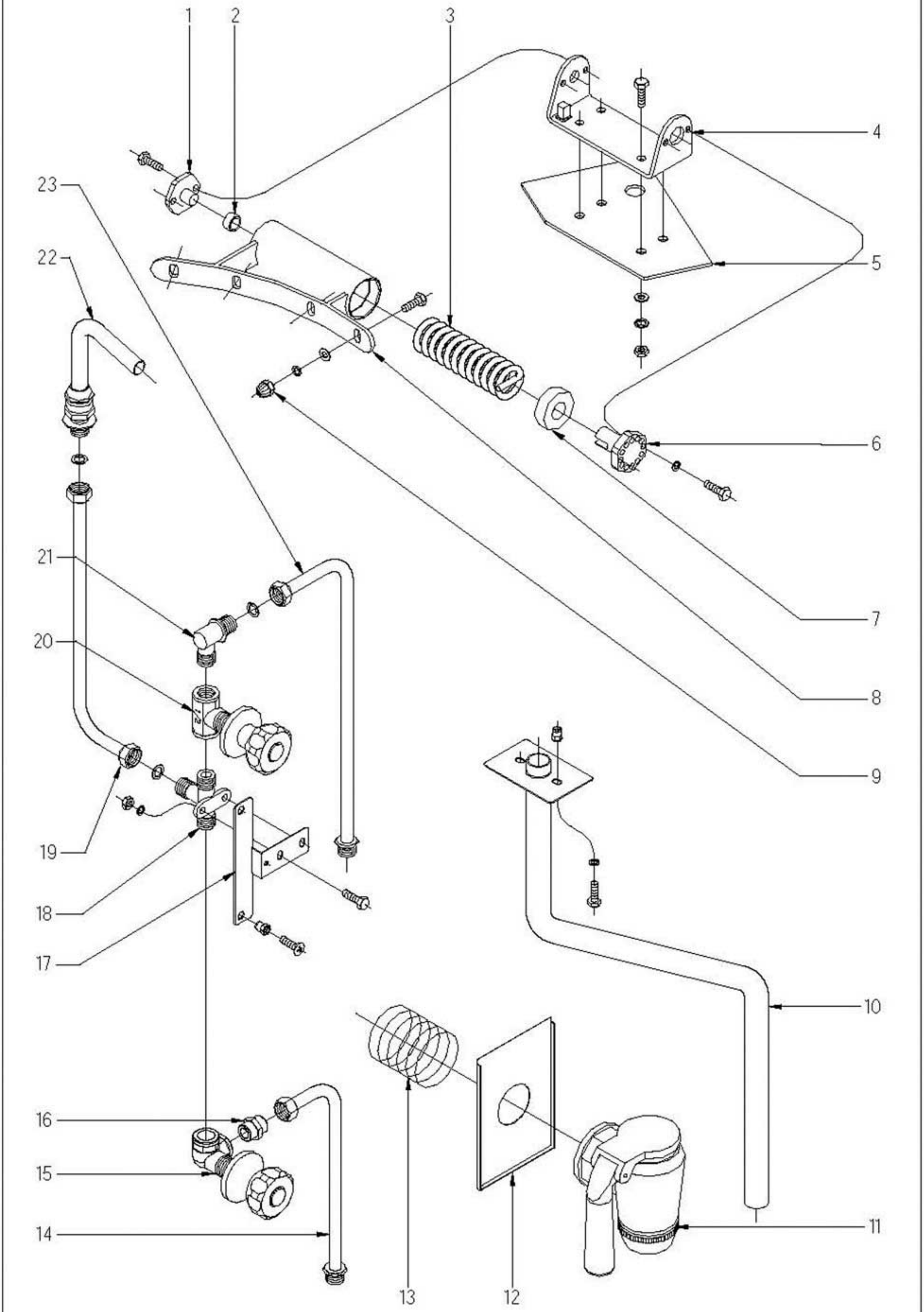


| Nplano | Firma | Fecha | Aparato | Lamina | |
|---|---|---|---|---|---|
| C-1694 | | 2006-05 | BISAGRA TAPA, DESAGÜES Y TOMAS DE AGUA<br>MARMITA MG9-10, 15, 20 | 3 | Fagor Industrial S.Coop.<br>Onate |

| MOD. | MARMITAS GAMA 900 | ZONA | BISAGRA TAPA, DESAGÜES Y TOMAS DE AGUA | PLANO | C-1694 |
|---|---|---|---|---|---|

| ITEM | CODIGO | DENOMINACION | TEXTO | MG9-10 | MG9-15 | MG9-20 | MG9-10 S | MG9-15 S | MG9-20 S | | | NOTAS |
|---|---|---|---|---|---|---|---|---|---|---|---|---|
| 1 | S116119000 | GIRO DE ASA | | 1 | 1 | 1 | 1 | 1 | 1 | | | |
| | Q012041000 | TORNILLO EXAGONAL M6x10 A304 | | 2 | 2 | 2 | 2 | 2 | 2 | | | |
| 2 | S116126000 | COJINETE CILINDRICO | | 1 | 1 | 1 | 1 | 1 | 1 | | | |
| 3 | S116121000 | RESORTE TAPA 07199 | | 1 | 1 | 1 | 1 | 1 | 1 | | | |
| 4 | S036131000 | SOPORTE BISAGRA COMPLETA | | 1 | 1 | 1 | 1 | 1 | 1 | | | |
| 5 | S026102000 | REFUERZO BISAGRA MARMITAS | | 1 | 1 | 1 | 1 | 1 | 1 | | | |
| | Q012055000 | TORNILLO EXAGONAL M8x30 A304 | | 4 | 4 | 4 | 4 | 4 | 4 | | | |
| | Q162050000 | TUERCA EXAGONAL M8x1 INOX | | 4 | 4 | 4 | 4 | 4 | 4 | | | |
| | Q232050000 | ARANDELA A8 | | 4 | 4 | 4 | 4 | 4 | 4 | | | |
| | Q262050000 | ARANDELA GROW. A8 A304 | | 4 | 4 | 4 | 4 | 4 | 4 | | | |
| | Q300060000 | ARANDELA 18x10x2 | | 4 | 4 | 4 | 4 | 4 | 4 | | | |
| 6 | S116120000 | TENSOR MUELLE | | 1 | 1 | 1 | 1 | 1 | 1 | | | |
| | Q012042000 | TORNILLO EXAGONAL M6x15 | | 2 | 2 | 2 | 2 | 2 | 2 | | | |
| | Q262040000 | ARANDELA GROW. A6 A304 | | 2 | 2 | 2 | 2 | 2 | 2 | | | |
| 7 | S116118000 | CASQUILLO | | 1 | 1 | 1 | 1 | 1 | 1 | | | |
| 8 | S036143000 | BISAGRA COMPLETA | | 1 | 1 | 1 | 1 | 1 | 1 | | | |
| | Q012053000 | TORNILLO EXAGONAL M8x20 A304 | | 4 | 4 | 4 | 4 | 4 | 4 | | | |
| | Q232050000 | ARANDELA A8 | | 4 | 4 | 4 | 4 | 4 | 4 | | | |
| | Q262050000 | ARANDELA GROW. A8 A304 | | 4 | 4 | 4 | 4 | 4 | 4 | | | |
| 9 | Q212051000 | TUERCA SOMBRERO M8 | | 4 | 4 | 4 | 4 | 4 | 4 | | | |
| 10 | S036119000 | TUBO DE VACIADO COMPLETO | | 1 | 1 | 1 | _ | 1 | 1 | | | |
| 10 | S065004000 | TUBO DE VACIADO COMPLETO S | | _ | _ | _ | 1 | _ | _ | | | |
| | Q012032000 | TORNILLO EXAGONAL M5x15 A304 | | 2 | 2 | 2 | 2 | 2 | 2 | | | |
| | Q262030000 | ARANDELA GROW. A5 A304 | | 2 | 2 | 2 | 2 | 2 | 2 | | | |
| | Q012063000 | TORNILLO EXAGONAL M10x20 A304 | | _ | _ | _ | 1 | 1 | 1 | | | |
| | Q304003000 | ARANDELA PLANA 10,5x16x2 | | _ | _ | _ | 1 | 1 | 1 | | | |
| 11 | S042107000 | GRIFO VACIADO 2" | | 1 | 1 | 1 | 1 | 1 | 1 | | | |
| 12 | S112803000 | CUBIERTA DE GRIFO | | 1 | 1 | 1 | 1 | 1 | 1 | | | |
| 13 | S112105000 | MUELLE SOPORTE CUBIERTA | | 1 | 1 | 1 | 1 | 1 | 1 | | | |
| | | | | | | | | | | | | |
| | | | | | | | | | | | | |

| MOD. | MARMITAS GAMA 900 | ZONA | BISAGRA TAPA, DESAGÜES Y TOMAS DE AGUA | PLANO | C-1694 |
|---|---|---|---|---|---|

| ITEM | CODIGO | DENOMINACION | TEXTO | MG9-10 | MG9-15 | MG9-20 | MG9-10 S | MG9-15 S | MG9-20 S | | | NOTAS |
|---|---|---|---|---|---|---|---|---|---|---|---|---|
| 14 | S105020000 | CONDUCCION ENTRADA INFERIOR | | 1 | 1 | 1 | _ | _ | _ | | | |
| 14 | S145015000 | CONDUCCION ENTRADA INFERIOR | | _ | _ | _ | 1 | _ | _ | | | |
| 14 | S225017000 | CONDUCCION INFERIOR COMPL. | | _ | _ | _ | _ | 1 | 1 | | | |
| | Q221343000 | REMACHE EXAGONAL M6 | | 1 | 1 | 1 | 1 | 1 | 1 | | | |
| | Q012042000 | TORNILLO EXAGON. M6x15 | | 1 | 1 | 1 | 1 | 1 | 1 | | | |
| | Q302022000 | ARANDELA 16x6x1,2 A304 | | 1 | 1 | 1 | 1 | 1 | 1 | | | |
| | Q306057000 | ARANDELA 18x12,5x1,5 | | 3 | 3 | 3 | 3 | 3 | 3 | | | |
| 15 | S102113000 | CUER.LLAVE PASO 90ºAT.CUADR. | | 1 | 1 | 1 | 1 | 1 | 1 | | | |
| | S012102000 | EMBELLECEDOR | | 1 | 1 | 1 | 1 | 1 | 1 | | | |
| | S102109000 | MANILLA PLASTICO AGUA FRIA | | 1 | 1 | 1 | 1 | 1 | 1 | | | |
| 16 | S205023000 | MANGUITO DOBLE 1/2 | | 1 | 1 | 1 | 1 | 1 | 1 | | | |
| 17 | S162614000 | SOPORTE GRIFOS DE AGUA | | 1 | 1 | 1 | 1 | 1 | 1 | | | |
| | Q221342000 | REMACHE EXAGONAL M5 | | 2 | 2 | 2 | 2 | 2 | 2 | | | |
| | Q152004000 | TORNILLO APLAST. M5x13 A304 | | 2 | 2 | 2 | 2 | 2 | 2 | | | |
| 18 | S205022000 | RACORD UNION GRIFOS | | 1 | 1 | 1 | 1 | 1 | 1 | | | |
| | Q012042000 | TORNILLO EXAGON. M6x15 | | 2 | 2 | 2 | 2 | 2 | 2 | | | |
| | Q162040000 | TUERCA EXAGONAL M6 | | 2 | 2 | 2 | 2 | 2 | 2 | | | |
| 19 | S185004000 | CONDUCTO TUBO DE LLENADO | | 1 | 1 | 1 | 1 | 1 | 1 | | | |
| | Q306057000 | ARANDELA Ø18x12,5x1,5 | | 2 | 2 | 2 | 2 | 2 | 2 | | | |
| 20 | S102111000 | CUER.LLAVE PASO AT.CUADRADO | | 1 | 1 | 1 | 1 | 1 | 1 | | | |
| | S012102000 | EMBELLECEDOR | | 1 | 1 | 1 | 1 | 1 | 1 | | | |
| | S102110000 | MANILLA PLASTICO AGUA CALIENT | | 1 | 1 | 1 | 1 | 1 | 1 | | | |
| 21 | S115013000 | CODO LATON | | 1 | 1 | 1 | 1 | 1 | 1 | | | |
| 22 | S052100000 | TUBO DE LLENADO 01102113 | | 1 | 1 | 1 | 1 | 1 | 1 | | | |
| 23 | S105022000 | CONDUC. ENTRADA SUPERIOR | | 1 | 1 | 1 | _ | _ | _ | | | |
| 23 | S065018000 | CONDUC. ENTRADA SUPERIOR | | _ | _ | _ | 1 | _ | _ | | | |
| 23 | S345012000 | CONDUC. ENTRADA SUPERIOR | | _ | _ | _ | _ | 1 | 1 | | | |
| | Q221343000 | REMACHE EXAGONAL M6 | | 1 | 1 | 1 | 1 | 1 | 1 | | | |
| | Q012042000 | TORNILLO EXAGONAL M6x15 | | 1 | 1 | 1 | 1 | 1 | 1 | | | |
| | Q302022000 | ARANDELA 16x6x1,2 A304 | | 1 | 1 | 1 | 1 | 1 | 1 | | | |
| | | | | | | | | | | | | |

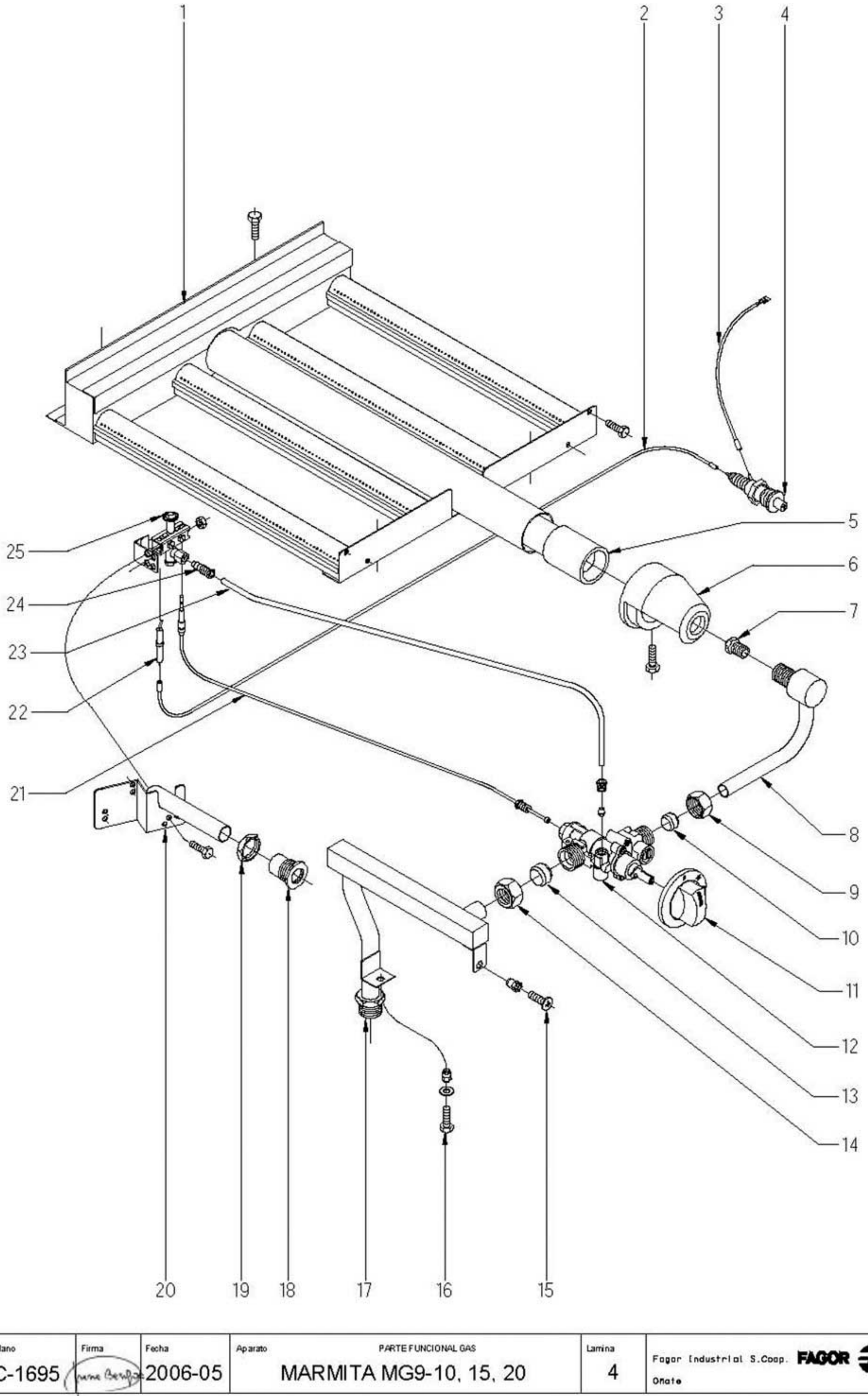


| Nplano | Firma | Fecha | Aparato | Lamina | |
|---|---|---|---|---|---|
| C-1695 | | 2006-05 | PARTE FUNCIONAL GAS<br>MARMITA MG9-10, 15, 20 | 4 | Fagor Industrial S.Coop.<br>Onate |

| MOD. | MARMITAS GAMA 900 | ZONA | PARTE FUNCIONAL GAS | PLANO | C-1695 |
|---|---|---|---|---|---|

| ITEM | CODIGO | DENOMINACION | TEXTO | MG9-10 | MG9-15 | MG9-20 | MG9-10 S | MG9-15 S | MG9-20 S | | | NOTAS |
|---|---|---|---|---|---|---|---|---|---|---|---|---|
| 1 | S275705000 | QUEMADOR COMP. MARMITAS | | 1 | 1 | 1 | 1 | 1 | 1 | | | |
| | Q012031000 | TORNILLO EXAGONAL M5x10 A304 | | 4 | 4 | 4 | 4 | 4 | 4 | | | |
| 2 | U323030000 | CABLE BUJIA | | 1 | 1 | 1 | 1 | 1 | 1 | | | |
| 3 | U333003000 | CABLE MASA ENCENDEDOR | | 1 | 1 | 1 | 1 | 1 | 1 | | | |
| | Q523000000 | TERMINAL LENGÜETA 6,35 (SIMP.) | | 1 | 1 | 1 | 1 | 1 | 1 | | | |
| | Q151301000 | PHILIPS 8x5/8 | | 1 | 1 | 1 | 1 | 1 | 1 | | | |
| 4 | S113034000 | PIEZO ELECTRICO | | 1 | 1 | 1 | 1 | 1 | 1 | | | |
| 5 | S135733000 | VENTURI MECANIZADO | | 1 | 1 | 1 | 1 | 1 | 1 | | | |
| 6 | O628100000 | CAMARA DE MEZCLA | | 1 | 1 | 1 | 1 | 1 | 1 | | | |
| | Q012043000 | TORNILLO EXAGON. M6x20 A304 | | 1 | 1 | 1 | 1 | 1 | 1 | | | |
| 7 | S012400000 | TOBERA Ø 2,20 BUT-PROPANO | | 1 | _ | _ | 1 | _ | _ | | | |
| 7 | S032400000 | TOBERA Ø 2,45 BUT-PROPANO | | _ | 1 | _ | _ | 1 | _ | | | |
| 7 | S172400000 | TOBERA Ø 2,55 BUT-PROPANO | | _ | _ | 1 | _ | _ | 1 | | | |
| 7 | S012401000 | TOBERA Ø 3,10 GAS NATURAL | | 1 | _ | _ | 1 | _ | _ | | | |
| 7 | S114401000 | TOBERA Ø 3,65 GAS NATURAL | | _ | 1 | _ | _ | 1 | _ | | | |
| 7 | S114400000 | TOBERA Ø 3,80 GAS NATURAL | | _ | _ | 1 | _ | _ | 1 | | | |
| 7 | S012402000 | TOBERA Ø 5,90 GAS VILLA | | 1 | _ | _ | 1 | _ | _ | | | |
| 7 | S032401000 | TOBERA Ø 6,90 GAS VILLA | | _ | 1 | _ | _ | 1 | _ | | | |
| 7 | S172402000 | TOBERA Ø 7,75 GAS VILLA | | _ | _ | 1 | _ | _ | 1 | | | |
| 8 | S015001000 | CONDUCCION A QUEMADOR COM. | | 1 | _ | _ | 1 | _ | _ | | | |
| 8 | S035025000 | CONDUCCION A QUEMADOR COM. | | _ | 1 | _ | _ | 1 | _ | | | |
| 8 | S045025000 | CONDUCCION A QUEMADOR COM. | | _ | _ | 1 | _ | _ | 1 | | | |
| | Q221302000 | TUERCA EXAGONAL 1/2G | | 1 | 1 | 1 | 1 | 1 | 1 | | | |
| 9 | S312105000 | TUERCA FIJAC.COND.QUEMADOR | | 1 | 1 | 1 | 1 | 1 | 1 | | | |
| 10 | S312106000 | BICONO Ø16 | | 1 | 1 | 1 | 1 | 1 | 1 | | | |
| 11 | S102103000 | BOTON DE MANDO COM.MARMITA | | 1 | 1 | 1 | 1 | 1 | 1 | | | |
| 12 | S312101000 | GRIFO SC. PEL-23S.V D.1,4 | | 1 | 1 | 1 | 1 | 1 | 1 | | | |
| 13 | S312104000 | BICONO Ø20 | | 1 | 1 | 1 | 1 | 1 | 1 | | | |
| 14 | S312103000 | TUERCA FIJACC. COND. GENERAL | | 1 | 1 | 1 | 1 | 1 | 1 | | | |
| 15 | Q152004000 | TORNILLO APLAST. M5x13 A304 | | 1 | 1 | 1 | 1 | 1 | 1 | | | |
| | Q221342000 | REMACHE EXAGONAL M5 | | 1 | 1 | 1 | 1 | 1 | 1 | | | |

| MOD. | MARMITAS GAMA 900 | ZONA | PARTE FUNCIONAL GAS | PLANO | C-1695 |
|---|---|---|---|---|---|

| ITEM | CODIGO | DENOMINACION | TEXTO | MG9-10 | MG9-15 | MG9-20 | MG9-10 S | MG9-15 S | MG9-20 S | | | NOTAS |
|---|---|---|---|---|---|---|---|---|---|---|---|---|
| 16 | Q012042000 | TORNILLO EXAGONAL M6x15 | | 1 | 1 | 1 | 1 | 1 | 1 | | | |
| | Q302022000 | ARANDELA 16x6x1,2 A304 | | 1 | 1 | 1 | 1 | 1 | 1 | | | |
| | Q221343000 | REMACHE EXAGONAL M6 | | 1 | 1 | 1 | 1 | 1 | 1 | | | |
| 17 | S105018000 | CONDUCCION GRAL.COMPLETA | | 1 | 1 | 1 | _ | _ | _ | | | |
| 17 | S105024000 | CONDUCCION GR.COMP.MG9-10S | | _ | _ | _ | 1 | _ | _ | | | |
| 17 | S225002000 | CONDUCCION GR.COMP.MG9-15S | | _ | _ | _ | _ | 1 | 1 | | | |
| 18 | S105002000 | EMBELLECEDOR TUBO ENCENDI. | | 1 | 1 | 1 | 1 | 1 | 1 | | | |
| 19 | Q221324000 | TUERCA 3/4 GAS | | 1 | 1 | 1 | 1 | 1 | 1 | | | |
| 20 | S042658000 | TUBO ENCENDIDO COMPLETO | | 1 | 1 | 1 | 1 | 1 | 1 | | | |
| | Q012031000 | TORNILLO EXAGONAL M5x10 A304 | | 2 | 2 | 2 | 2 | 2 | 2 | | | |
| 21 | U562130000 | TERMOPAR L=850 | | 1 | 1 | 1 | 1 | 1 | 1 | | | |
| 22 | X012101000 | BUJIA 915.037 | | 1 | 1 | 1 | 1 | 1 | 1 | | | |
| 23 | S015012000 | TUBO PILOTO MARMITA 100L | | 1 | _ | _ | 1 | _ | _ | | | |
| 23 | S035027000 | TUBO PILOTO MARMITA 150L | | _ | 1 | _ | _ | 1 | _ | | | |
| 23 | S045031000 | TUBO PILOTO MARMITA 200L | | _ | _ | 1 | _ | _ | 1 | | | |
| | X205028000 | BICONO Ø 6 | | 1 | 1 | 1 | 1 | 1 | 1 | | | |
| | S312107000 | MANGUITO TUBO PILOTO | | 1 | 1 | 1 | 1 | 1 | 1 | | | |
| 24 | U134323000 | RACORD BICONO Ø 6 958.031 | | 1 | 1 | 1 | 1 | 1 | 1 | | | |
| 25 | R202100000 | CONJUNTO SOPORTE PILOTO | | 1 | 1 | 1 | 1 | 1 | 1 | | | |
| | U442138000 | INYECTOR Ø 0,25 (BUTANO-PROP) | | 1 | 1 | 1 | 1 | 1 | 1 | | | |
| | U442137000 | INYECTOR Ø 0,4 (GAS NATURAL) | | 1 | 1 | 1 | 1 | 1 | 1 | | | |
| | U442138000 | INYECTOR Ø 0,25 (GAS VILLA) | | 1 | 1 | 1 | 1 | 1 | 1 | | | REGULAR |
| | Q012041000 | TORNILLO EXAGON. M6x10 A304 | | 2 | 2 | 2 | 2 | 2 | 2 | | | |
| | Q162040000 | TUERCA EXAGONAL M6 | | 2 | 2 | 2 | 2 | 2 | 2 | | | |
| | | | | | | | | | | | | |
| | | | | | | | | | | | | |
| | | | | | | | | | | | | |
| | | | | | | | | | | | | |
| | | | | | | | | | | | | |
| | | | | | | | | | | | | |
| | | | | | | | | | | | | |
| | | | | | | | | | | | | |
| | | | | | | | | | | | | |
| | | | | | | | | | | | | |

| MOD. | MARMITAS GAMA 900 | ZONA | VARIOS | PLANO | |
|---|---|---|---|---|---|

| ITEM | CODIGO | DENOMINACION | TEXTO | MG9-10 | MG9-15 | MG9-20 | MG9-10 S | MG9-15 S | MG9-20 S | | | NOTAS |
|---|---|---|---|---|---|---|---|---|---|---|---|---|
| | S206501000 | FOLLETO DE INSTRUCCIONES | | 1 | 1 | 1 | 1 | 1 | 1 | | | |
| | | | | | | | | | | | | |
| | | | | | | | | | | | | |
| | | | | | | | | |

| MOD. | MARMITAS GAMA 900 | | ZONA | PIEZAS ESPECIFICAS PARA LOS DISTINTOS GASES | | | | | | PLANO | | |
|---|---|---|---|---|---|---|---|---|---|---|---|---|
| ITEM | CODIGO | DENOMINACION | TEXTO | MG9-10 | MG9-15 | MG9-20 | MG9-10 S | MG9-15 S | MG9-20 S | | | NOTAS |
| | | BUTANO - PROPANO | | | | | | | | | | |
| 7 | S012400000 | TOBERA Ø 2,20 | | 1 | _ | _ | 1 | _ | _ | | | |
| 7 | S032400000 | TOBERA Ø 2,45 | | _ | 1 | _ | _ | 1 | _ | | | |
| 7 | S172400000 | TOBERA Ø 2,55 | | _ | _ | 1 | _ | _ | 1 | | | |
| 25 | U442138000 | INYECTOR PILOTO Ø 0,25 | | 1 | 1 | 1 | 1 | 1 | 1 | | | |
| S/N | U136501000 | INDICADOR BUTANO - PROPANO | | 1 | 1 | 1 | 1 | 1 | 1 | | | |
| | | GAS NATURAL | | | | | | | | | | |
| 7 | S012401000 | TOBERA Ø 3,10 | | 1 | _ | _ | 1 | _ | _ | | | |
| 7 | S114401000 | TOBERA Ø 3,65 | | _ | 1 | _ | _ | 1 | _ | | | |
| 7 | S114400000 | TOBERA Ø 3,80 | | _ | _ | 1 | _ | _ | 1 | | | |
| 25 | U442137000 | INYECTOR PILOTO Ø 0,4 | | 1 | 1 | 1 | 1 | 1 | 1 | | | |
| S/N | U134402000 | INDICADOR GAS NATURAL | | 1 | 1 | 1 | 1 | 1 | 1 | | | |
| | | GAS VILLA | | | | | | | | | | |
| 7 | S012402000 | TOBERA Ø 5,90 | | 1 | _ | _ | 1 | _ | _ | | | |
| 7 | S032401000 | TOBERA Ø 6,90 | | _ | 1 | _ | _ | 1 | _ | | | |
| 7 | S172402000 | TOBERA Ø 7,75 | | _ | _ | 1 | _ | _ | 1 | | | |
| 25 | U442138000 | INYECTOR PILOTO Ø 0,25 | | 1 | 1 | 1 | 1 | 1 | 1 | | | REGULAR |
| S/N | U134310000 | INDICADOR GAS VILLA | | 1 | 1 | 1 | 1 | 1 | 1 | | | |