Modello/Type: **60/30 BME**

cod./num. 2531373.00

data/date: 22/05/2013

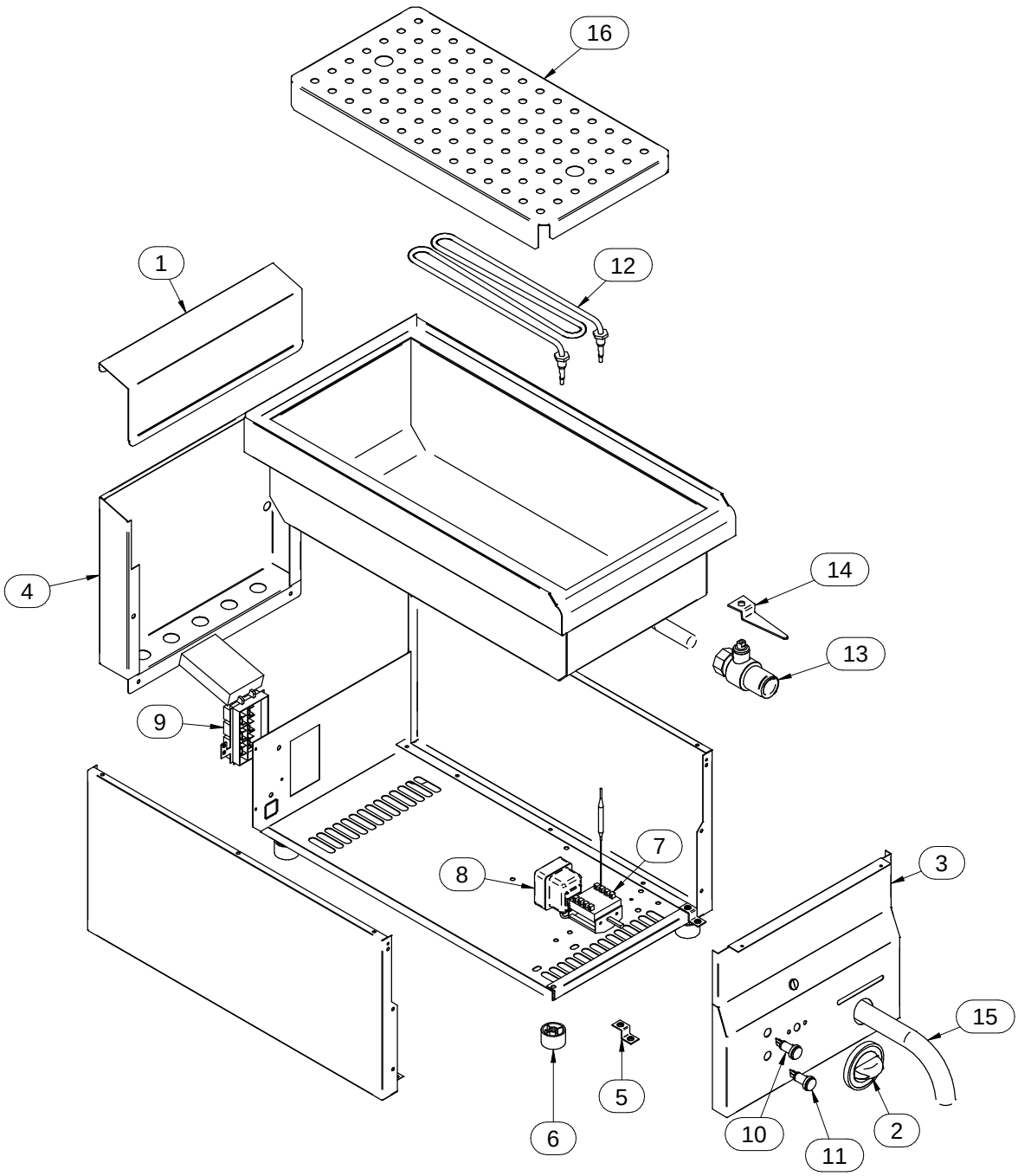

Modello Type:	60/30 BME				cod. / num.	2531374.00
					data / date:	20/05/2013
POS. ITEM	CODICE CODE	DESCRIZIONE	DESCRIPTION	DENOMINATION	BENENNUNG	NOTE / NOTES
1	611.723.00	ALZATINA	UPSTAND	DOSSERET	AUFKANTUNG	
2	612.005.00	MANOPOLA	KNOB	BOUTON	DREHKNOPF	
3	256.045.00	CRUSCOTTO	CONTROL PANEL	BANDEAU	BEDIENBLENDE	
4	621.751.00	PANNELLO POSTERIORE	BACK PANEL	PANNEAU POSTERIEUR	HINTERBRETT	
5	256.002.00	STAFFA FISSAGGIO CRUSCOTTO	CONTROL PANEL FIXING BRACKET	EQUERRE FIXATION BANDEAU	BEFESTIGUNGSWINKEL BEDIENBLENDE	
6	651.001.00	PIEDINO	FOOT	PIED	STELLFUSS	
7	661.000.00	COMMUTATORE	CHANGE-OVER SWITCH	COMMUTATEUR	UMSCHALTER	
8	661.070.00	TERMOSTATO	THERMOSTAT	THERMOSTAT	THERMOSTAT	
9	663.040.00	MORSETTIERA	TERMINAL BOARD	BORNES	KLEMMENBRETT	
10	663.043.00	SPIA VERDE	GREEN INDICATOR LIGHT	LAMPE TEMOIN VERTE	GRUENE KONTROLLAMPE	
11	663.044.00	SPIA ARANCIO	ORANGE INDICATOR LIGHT	LAMPE TEMOIN ORANGE	ORANGE KONTROLLAMPE	
12	665.056.00	RESISTENZA	HEATING ELEMENT	RESISTANCE	HEIZKOERPER	
13	256.047.00	RUBINETTO	TAP	ROBINET	WASSERHAHN	
14	623.027.00	LEVA RUBINETTO	TAP LEVER	LEVIER ROBINET	HAHNHEBEL	
15	631.000.00	SCARICO	DRAIN	VIDANGE	ABLAUF	
16	621.815.00	FALSOFONDO	FALSE BOTTOM	FAUX-FOND	ABTROPFPLATTE	
17						
18						
19						
20						