FAGOR

FAGOR INDUSTRIAL

DESPIECE TÉCNICO
TECHNICAL PARTS

Lavavajillas

Dishwasher

MODELOS
COP-503 / DD / B / SOFT

Diciembre 2014 December
Revisado Julio 2015 July Revised



Together we evolve

N plano / Drawing N.	Firma / Signature	Fecha / Date	Aparato / Appliance		Lamina
C-3314	Iban R.	2014-11	LAVAVAJILLAS COP-503 DISHWASHER	ARMAZON / FRAME	1

Fagor Industrial S.Coop.
Onate

ITEM MARCADO EN COLOR = REPUESTO RECOMENDADO
COLOURED ITEM = RECOMMENDED SPARE PART

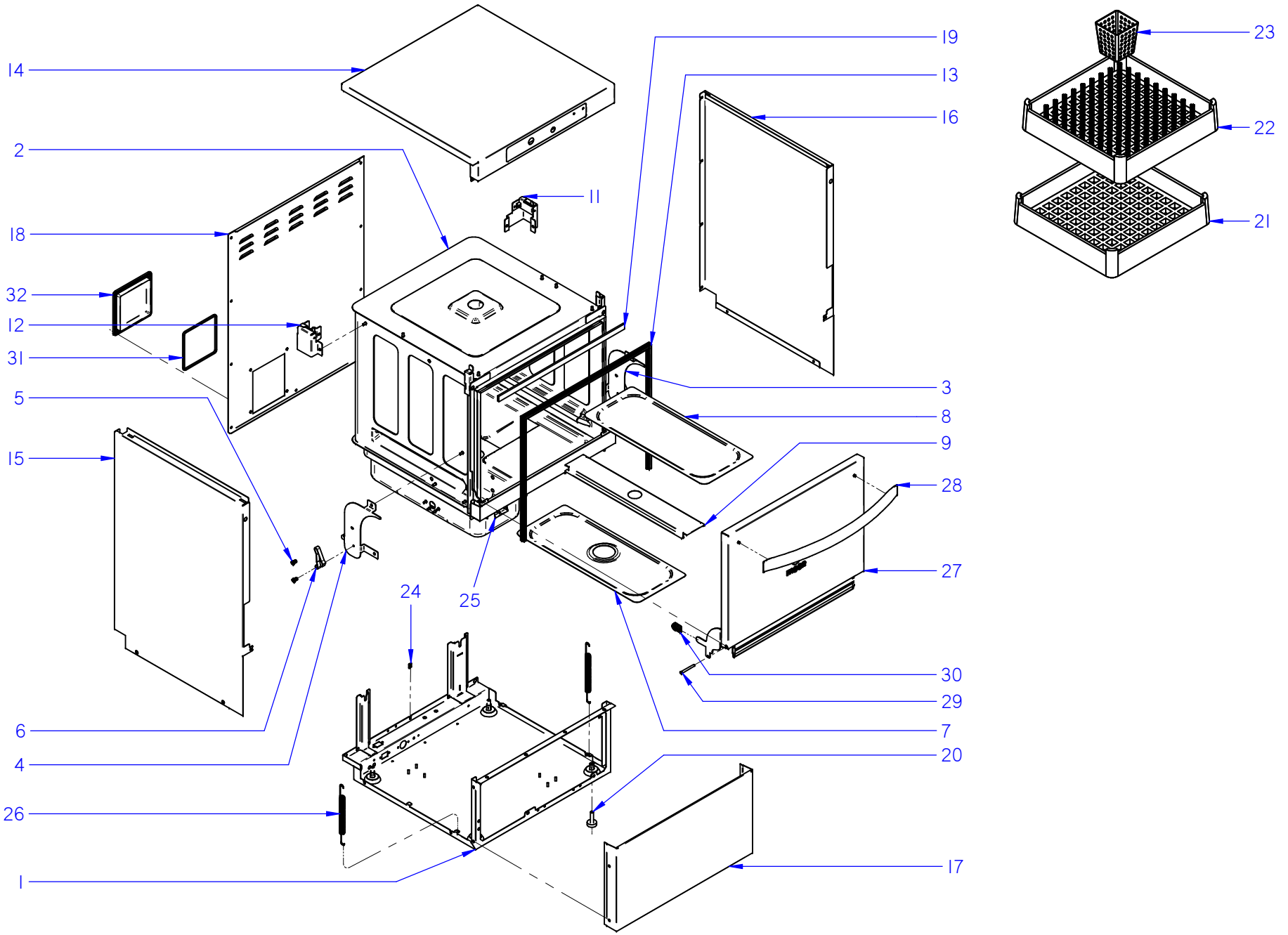

ZONA / ZONE	ARMAZON / FRAME	LÁMINA / DRAWING	C-3314	FAGOR

ITEM	REFERENCIA REFERENCE	DENOMINACIÓN	DENOMINATION	COP-503							RECOMMENDED	ELIMINADO ELIMINATED	INTRODUCIDO INTRODUCED	NOTAS / NOTES
1	12097740	CONJUNTO_BASE_ARMAZON_AF	BASE FRAME COMPLETE	1										
2	12114636	CAJA SOLDADA CONCEPT+	WELDED TUB CONCEPT+	1										
3	12043455	SOPORTE RESORTE PUERTA DCHA	DOOR SPRING RIGHT SUPPORT	1										
4	12043457	SOPORTE RESORTE PUERTA IZDA	DOOR SPRING LEFT SUPPORT	1										
5	12043554	EJE RESORTE	SPRING SHAFT	4										
6	12043429	RESORTE PUERTA	DOOR SPRING	2										
7	12109967	BANDEJA FILTRO ALIVIADERO	SPILLWAY FILTER TRAY	1										
8	12109964	BANDEJA CONCEPT LISA (DCHA.)	CONCEPT FLAT TRAY (RIGHT)	1										
9	12098244	SOPORTE CENTRAL BANDEJAS	CENTRAL TRAYS SUPPORT	1										
11	12103774	SUJECIÓN PANEL LATERAL DCHO.	RIGHT SIDE PANEL FASTENING	1										
12	12103787	SUJECIÓN PANEL LATERAL IZDO.	LEFT SIDE PANEL FASTENING	1										
13	12049352	BURLETE APERTURA FRONTAL	FRONT LOADING GASKET	1										
14	12104359	TAPA PORTAMANDOS CONCEPT+	CONTROL PANEL COVER CONCEPT+	1										
15	12122224	PANEL LATERAL IZDO	LEFT SIDE PANEL	1										
16	12122222	PANEL LATERAL DCHO	RIGHT SIDE PANEL	1										
17	12122220	PANEL FRONTAL	FRONT PANEL	1										
18	12120613	PANEL POSTERIOR ADVANCE	REAR PANEL ADVANCE	1										
19	12111378	ESPUMA CIERRE TAPA PORTAMAND.	CTRL. P. COVER CLOSURE FOAM	1										
20	12024163	PATA REGULABLE	REGULABLE FEET	4										
21	12025011	CESTILLO BASE CT-10	CT-10 BASE BASKET	1										
22	12024990	CESTILLO PLATOS CP-16-18	CP-16-18 PLATES BASKET	1										
23	12023745	CESTILLO CUBIERTOS	CUTLERY BASKET	1										
24	12087215	TUERCA RÁPIDA M5 MIKALOR	MIKALOR QUICK NUT M5	19										
25	12044905	SOPORTE BULBO TERMOMETRO	THERMOSTAT BULB SUPPORT	1										
26	12097279	MUELLE APERTURA FRONTAL	FRONT LOADING SPRING	2										
27	12097227	PUERTA COMPLETA	COMPLETE DOOR	1										
28	12049466	ASA PUERTA	DOOR HANDLE	1										
29	12048418	TORN_ESPECIAL_EJE_PUERTA_M6	DOOR AXIS SPECIAL SCREW M-6	2										
30	12047927	TOPE BISAGRA	HINGE DOORSTOP	2										
31	12096947	JUNTA TAPA	COVER'S SEAL	1										
32	12095220	TAPA PLASTICO CAJA CONEXIONES	CONNECTIONS BOX COVER	1										

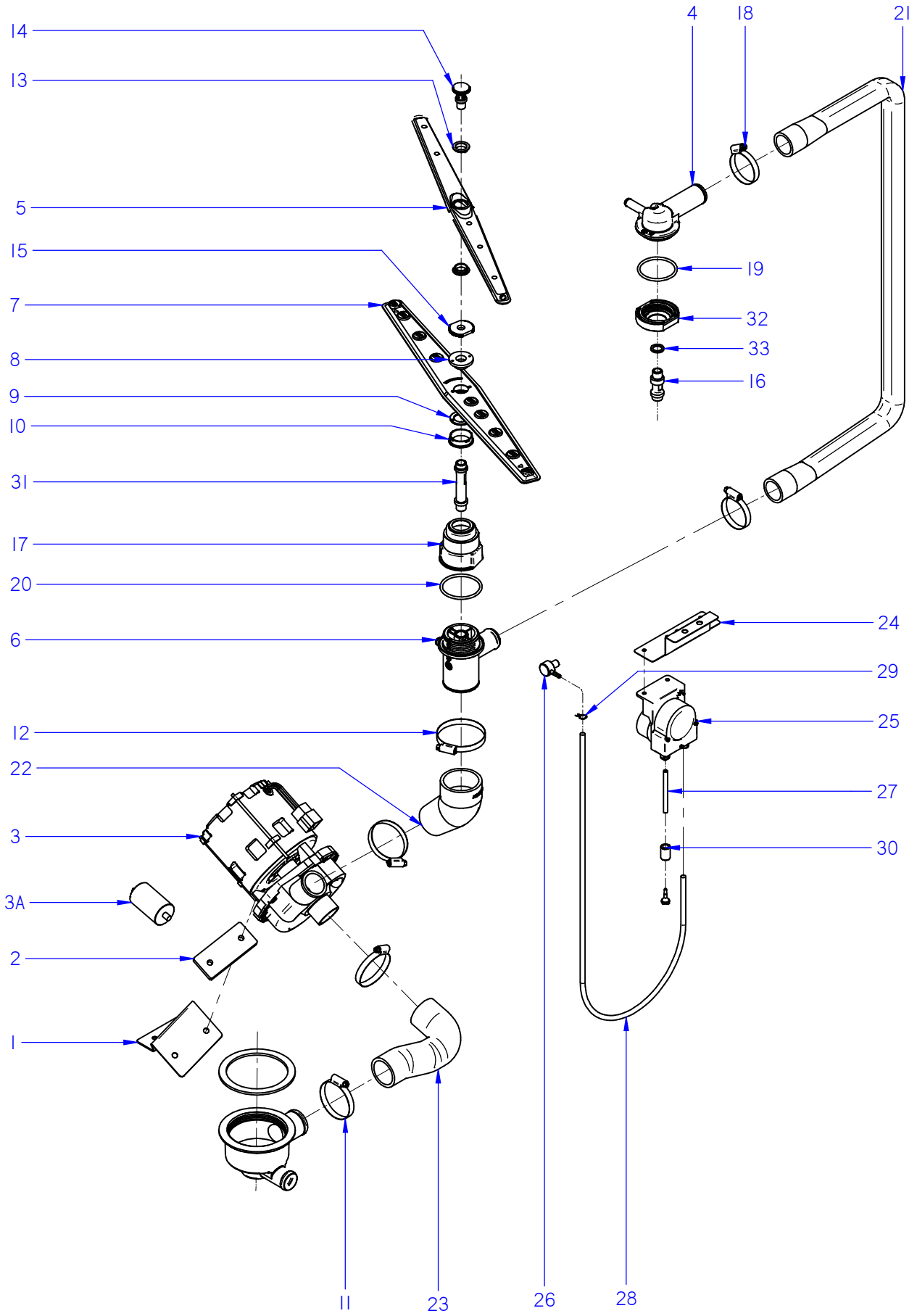

ITEM MARCADO EN COLOR = REPUESTO RECOMENDADO
COLOURED ITEM = RECOMMENDED SPARE PART

N plano / Drawing N.	Firma / Signature	Fecha / Date	Aparato / Appliance	Lamina / Sheet	
C-3315	Iban R.	07-2015	PARTE FUNCIONAL LAVADO / WASHING FUNCTIONAL PART LAVAVAJILLAS COP-503 / 503 DD DISHWASHER	2	Fagor Industrial S.Coop. FAGOR Onate

ZONA / ZONE	PARTE FUNCIONAL LAVADO / WASHING FUNCTIONAL PART	LÁMINA / DRAWING	C-3315	FAGOR

ITEM	REFERENCIA REFERENCE	DENOMINACIÓN	DENOMINATION	COP-503							RECOMMENDED	ELIMINADO ELIMINATED	INTRODUCIDO INTRODUCED	NOTAS / NOTES
1	12043784	SOPORTE BOMBA LAVADO	WASHIG PUMP SUPPORT	1										
2	12023556	BASE BOMBA LAVADO 1003016	WASHIG PUMP BASE 1003016	1										
3	12043287	MOTOBOMBA 590KW 50Hz	WASHIG PUMP 590KW 50Hz	1							X			
3	12102834	MOTOBOMBA 590KW 60Hz	WASHIG PUMP 590KW 60Hz	1							X			
3A	12024376	CONDENSADOR 10MF	10MF CAPACITOR	1							X			
4	12041614	SOP. DISTRIBUIDOR SUPERIOR	UPPER SPRY-ARM SUPPORT	1										
5	12102984	DISTRIBUIDOR ACLARADO EVO	EVO RINSE SPRY-ARM	2										
6	12047863	SOP. DISTRIBUIDOR INFERIOR	LOWER SPRY-ARM SUPPORT	1										
7	12025122	DISTRIBUIDOR MONTADO	ASSEMBLED DISTRIBUTOR	2										
8	12110631	ENGANCHE DISTRIBUIDOR LATON	BRASS DISTRIBUTOR HOOK	2										
9	12024289	AMARRE ENGANCHE DISTRIBUI	DISTRIBUTOR HOOK FASTENING	2										
10	12041629	PROTECTOR FUGAS	LEAKAGE PROTECTOR	2										
11	12009962	ABRAZADERA 40-60	40-60 CLAMP	3										
12	12009933	ABRAZADERA 50-70L	50-70L CLAMP	1										
13	12041628	PROTECTOR FUGAS ACLARADO	RINSE LEAKAGE PROTECTOR	4										
14	12043422	EJE ACLARADO	RINSE SHAFT	2										
15	12043288	TUERCA ESPECIAL	SPECIAL NUT	2										
16	12043289	EJE LAVADO FRONTAL ADVANCE	WASHING SHAFT FRONT LOADING	1										
17	12048042	AMARRE SOPORTE DISTR. INFERIOR	LOW. DISTRIB. SUPPORT FASTENING	1										
18	12009986	ABRAZADERA 32-50L	32-50L CLAMP	2										
19	12049055	JUNTA TORICA Ø50,39 x 3,53	O-RING Ø50,39 x 3,53	1										
20	12049052	JUNTA 53,57x3,53 SOP DISTRI INFE	O-RING Ø53,57 x 3,53 LOW. DISTRIB.	1										
21	12041930	ARBOL LAVADO	WASHING TREE	1										
22	12041926	CODO IMPULSION CONCEPT	EXPULSION ELBOW CONCEPT	1										
23	12103941	COD ASPIRACION CONCEPT	SUCTION ELBOW CONCEPT	1										
31	12048535	EJE LAVADO AF CONCEPT	WASHING SHAFT FRONT LOADING	1										
32	12041531	AMARRE SOPORTE DISTR. SUPERI.	UPPER DISTRIB. SUPPORT FASTEN.	1										
33	12115944	CALZO EJE LAVADO	WASHING SHAFT SHIM	1										

ZONA / ZONE	PARTE FUNCIONAL LAVADO / WASHING FUNCTIONAL PART	LÁMINA / DRAWING	C-3315	FAGOR

ITEM	REFERENCIA REFERENCE	DENOMINACIÓN	DENOMINATION	COP-503	COP-503 DD						RECOMMENDED	ELIMINADO ELIMINATED	INTRODUCIDO INTRODUCED	NOTAS / NOTES
	19022347	**KIT DOSIFICADOR DETERG. EVO**	**DETERGENT DISPENSER KIT EVO**											
24	12102040	SOPORT. DOSIFICADORES	DISPENSERS SUPPORT	_	1									
25	12024216	DOSIFIC. DGTE REGULABLE G300	REGUL. DETERG. DISPENSER G300	_	1						X			
26	12024531	INYECTOR DETERGENTE INOX	DETERGENT INJECTOR	_	1									
27	12024139	CONDUCTO ASPIRACIÓN AZKOY CO	AZKOY SUCTION PIPE	_	1									
28	11000079	CONDUCTO DOSIF. TRANSP 6X4	DISPENSER TRANSPARENT PIPE	_	1									
29	12023707	BRIDA ELASTICA TUBO	ELASTIC CLAMP FOR PIPES	_	1									
30	12024353	PESO FILTRO	FILTER'S WEIGHT	_	1									

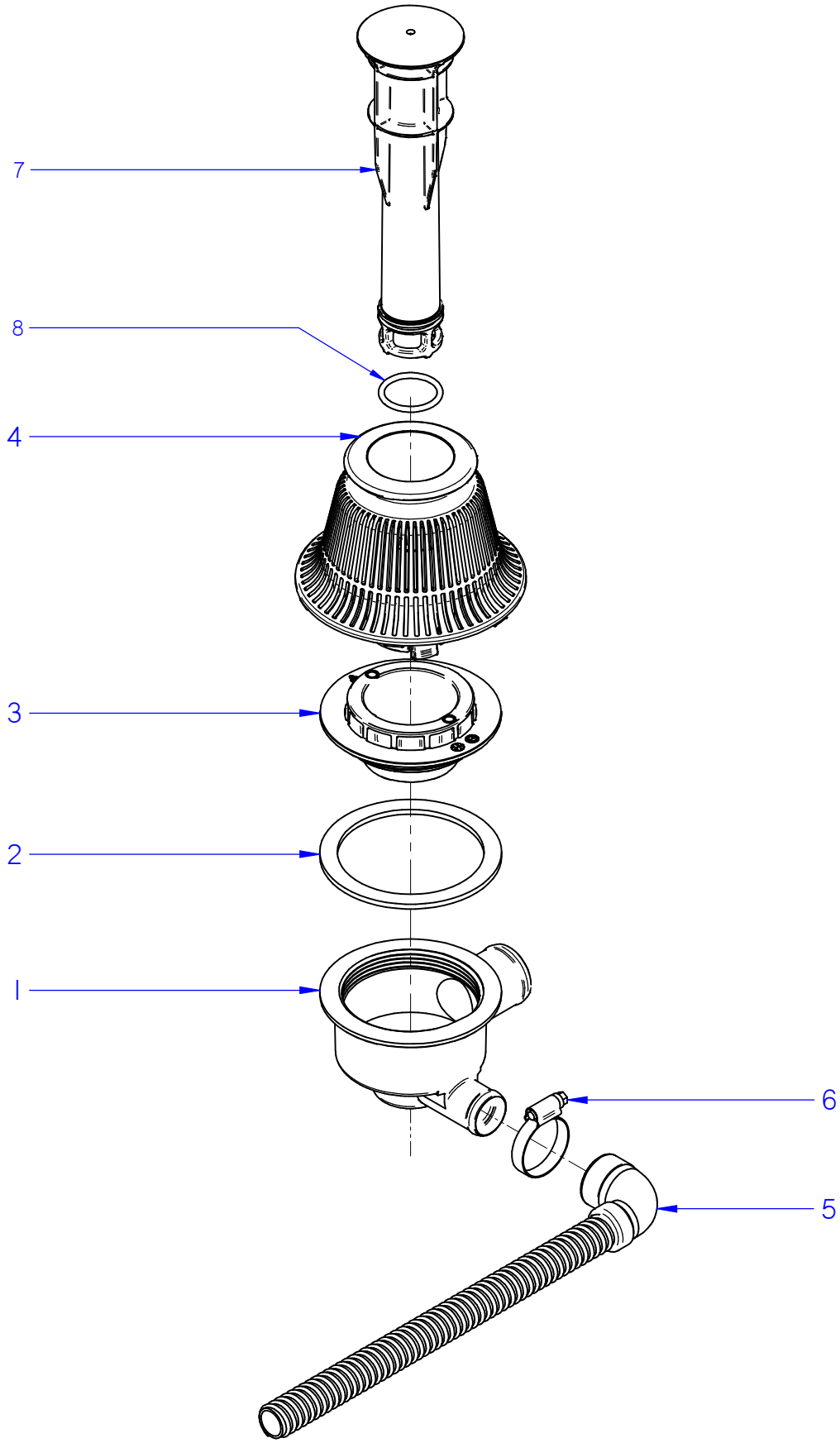

ITEM MARCADO EN COLOR = REPUESTO RECOMENDADO
COLOURED ITEM = RECOMMENDED SPARE PART

N plano / Drawing N.	Firma / Signature	Fecha / Date	Aparato / Appliance	Lamina / Sheet	
C-3316	Iban R.	11-2014	DESAGÜE / DRAINING PART LAVAVAJILLAS COP-503 DISHWASHER	3	Fagor Industrial S.Coop. FAGOR Oñate

ZONA / ZONE	DESAGÜE / DRAIN	LÁMINA / DRAWING	C-3316	FAGOR

ITEM	REFERENCIA REFERENCE	DENOMINACIÓN	DENOMINATION	COP-503							RECOMMENDED	ELIMINADO ELIMINATED	INTRODUCIDO INTRODUCED	NOTAS / NOTES
1	12041533	CUBETA A.F. ADVANCE	FRONT LOADING PAIL ADVANCE	1										
2	12041925	JUNTA Ø110xØ89x3.5	Ø110xØ89x3.5 SEAL	1										
3	12041600	AMARRE CUBETA A.F. ADVANCE	FRONT LOADING PAIL FASTENING	1										
4	12049633	FILTRO COMPLETO CONCEPT	COMPLETE FILTER CONCEPT	1										
5	12115471	MANGUERA DESAGÜE	DRAINING PIPE	1							X			
6	12009997	ABRAZADERA 25-40	25-40 CLAMP	1										
7	12049632	ALIVIADERO COMPLETO	COMPLETE SPILLWAY	1										
8	12115850	JUNTA TORICA ALIVIADERO	SPILLWAY O-RING	1										
	19013376	**KIT BOMBA DE DESAGÜE**	**DRAINING PUMP KIT**											

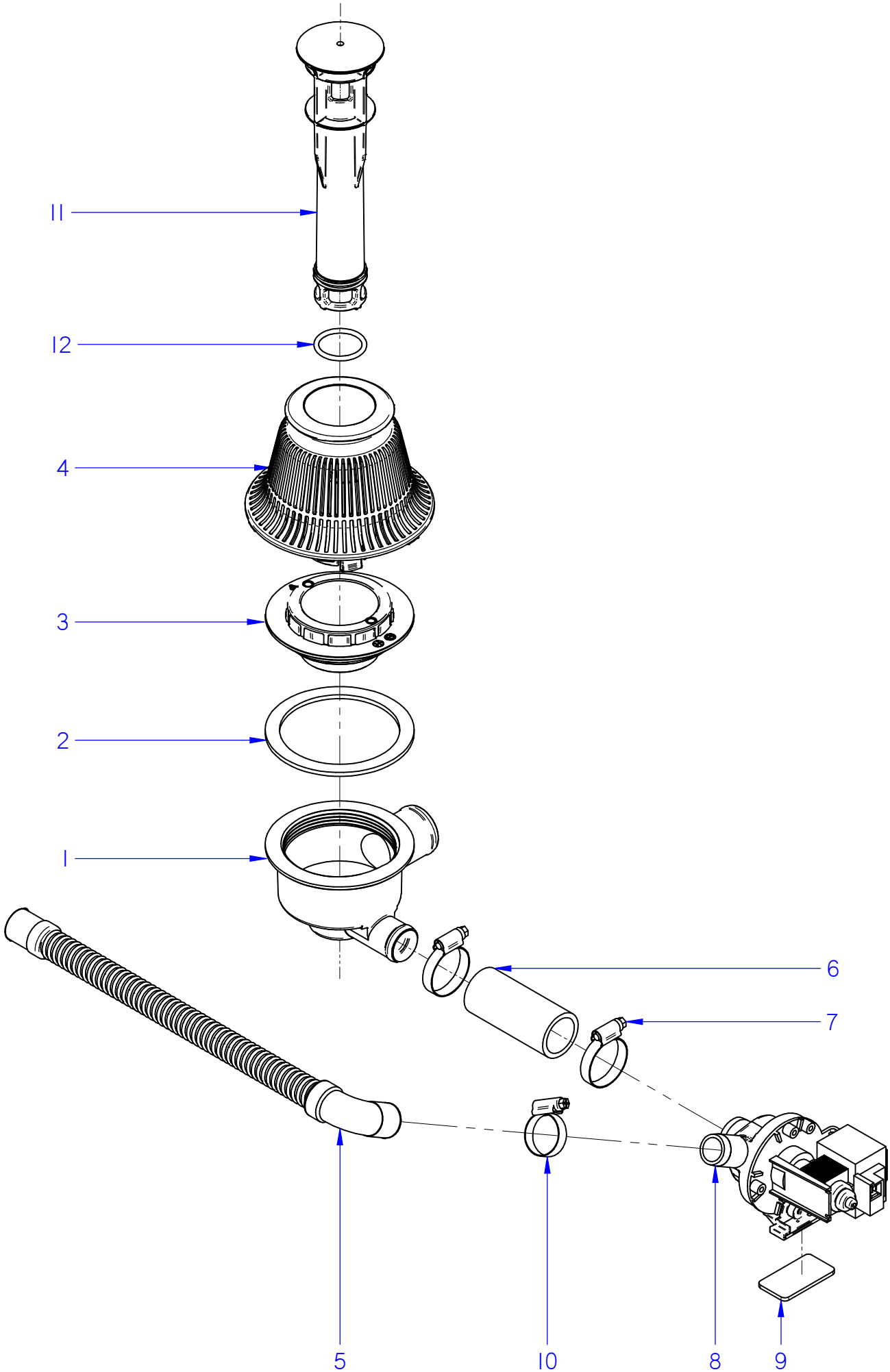

ITEM MARCADO EN COLOR = REPUESTO RECOMENDADO
COLOURED ITEM = RECOMMENDED SPARE PART

N plano / Drawing N.	Firma / Signature	Fecha / Date	Aparato / Appliance	Lamina / Sheet	
C-3317	Iban R.	11-2014	DESAGÜE / DRAINING PART LAVAVAJILLAS COP-503 B DISHWASHER	4	Fagor Industrial S.Coop. FAGOR Oñate

ZONA / ZONE	DESAGÜE / DRAIN	LÁMINA / DRAWING	C-3317	FAGOR

ITEM	REFERENCIA REFERENCE	DENOMINACIÓN	DENOMINATION	COP-503 B							RECOMMENDED	ELIMINADO ELIMINATED	INTRODUCIDO INTRODUCED	NOTAS / NOTES
1	12041533	CUBETA A.F.	FRONT LOADING PAIL	1										
2	12041925	JUNTA Ø110xØ89x3.5	Ø110xØ89x3.5 SEAL	1										
3	12041600	AMARRE CUBETA A.F. ADVANCE	FRONT LOADING PAIL FASTENING	1										
4	12049633	FILTRO COMPLETO CONCEPT	COMPLETE FILTER CONCEPT	1										
5	12023666	MANGUERA DESAGÜE	DRAINING PIPE	1										
6	12041924	COND. CUBETA-BOMBA DESAGÜE	PAIL - DRAINING PUMP PIPE	1										
7	12009997	ABRAZADERA 25-40	25-40 CLAMP	2										
8	12094265	BOMBA DESAGÜE	DRAINING PUMP	1							X			
9	12010021	JUNTA GUIA	GUIDE SEAL	1										
10	12010023	ABRAZADERA 20-32	20-32 CLAMP	1										
11	12114854	ALIVIADERO COMP. VERSION BD	DR. PUMP VERSION SPILLWAY	1										
12	12115850	JUNTA TORICA ALIVIADERO	SPILLWAY O-RING	1										

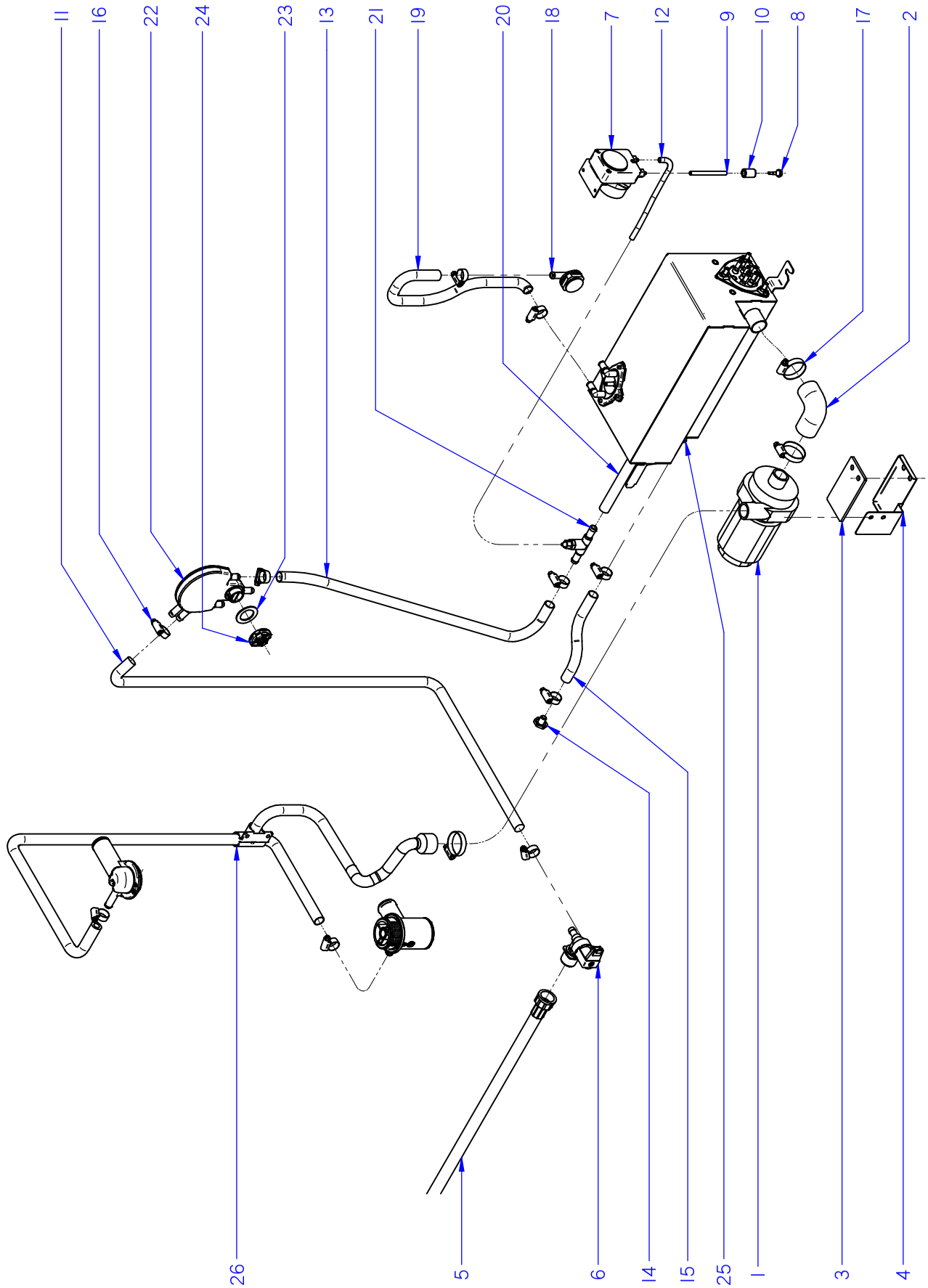

ITEM MARCADO EN COLOR = REPUESTO RECOMENDADO
COLOURED ITEM = RECOMMENDED SPARE PART

N plano / Drawing N.	Firma / Signature	Fecha / Date	Aparato / Appliance	Lamina / Sheet	
C-3318	Iban R.	2014-11	ACLARADO / RINSING PART LAVAVAJILLAS COP-503 DISHWASHER	5	Fagor Industrial S.Coop. FAGOR Onate

ZONA / ZONE	PARTE FUNCIONAL ACLARADO / FUNCTIONAL RINSE PART	LÁMINA / DRAWING	C-3318	FAGOR

ITEM	REFERENCIA REFERENCE	DENOMINACIÓN	DENOMINATION	COP-503							RECOMMENDED	ELIMINADO ELIMINATED	INTRODUCIDO INTRODUCED	NOTAS / NOTES
1	12024233	BOMBA ACLARADO HANNING	HANNING RINSING PUMP	1							X			
2	12041928	CONDUCTO CALDERIN-BOMBA	BOILER-PUMP HOSE	1										
3	12096458	BASE GOMA BOMBA ACLARADO	RINSING PUMP RUBBER BASE	1										
4	12097341	SOPORTE BOMBA ACLARADO AF	RINSING PUMP'S SUPPORT	1										
5	12024115	MANGUERA ENTRADA AGUA	WATER SUPPLY HOSE	1										
6	12095427	E.V SIMPLE 220V SALIDA A 90º	SIMPLE E.V 90º EXIT	1							X			
7	12092198	DOSIFICADOR ABRILLANTADOR	RINSE DISPENSER	1							X			
8	12011355	FILTRO ASPIRACION	SUCTION FILTER	1										
9	12024139	CONDUCTO ASPIRACIÓN AZKOY	AZKOY SUCTION PIPE	1										
10	12024353	PESO FILTRO	FILTER WEIGHT	1										
11	12114353	TUBO E.V-AIRBREAK WRAS	EL.VALVE-AIRBREAK PIPE WRAS	1										
12	11000079	CONDUCTO DOSIF. TRANSP 6X4	DISPENSER TRANSPARENT PIPE	1										
13	11000083	TUBO GOMA NEGRA D 17x10	BLACK RUBBER PIPE D 17x10	1										
14	12041528	TAPON M10x1.5	M10x1.5 CAP	1										
15	11000083	TUBO GOMA NEGRA D 17x10	BLACK RUBBER PIPE D 17x10	1										
16	12010036	ABRAZADERA 12-20	12-20 CLAMP	10										
17	12009997	ABRAZADERA 25-40	25-40 CLAMP	3										
18	12097453	CONDUCTO AIREACION CALDERIN	BOILER VENTILATION ELBOW	1										
19	12091150	CONDUCTO_ACLARADO_COMPLETO	COMPLETE RINSING PIPE	1										
20	11000083	TUBO GOMA NEGRA D 17x10	BLACK RUBBER PIPE D 17x10	1										
21	12040714	RACOR EN T ANTIRRETORNO	T FITTING NON-RETURN	1										
22	12091121	AIR BREAK	AIR BREAK	1							X			
23	12091122	JUNTA AIR BREAK	AIR BREAK'S SEAL	1										
24	12104339	TUERCA AIR BREAK	AIR BREAK'S NUT	1										
25	12118972	CALDERIN RECTANGULAR	SQUARE BOILER	1										
26	12091150	CONDUCTO_ACLARADO_COMPLETO	COMPLETE RINSING PIPE	1										

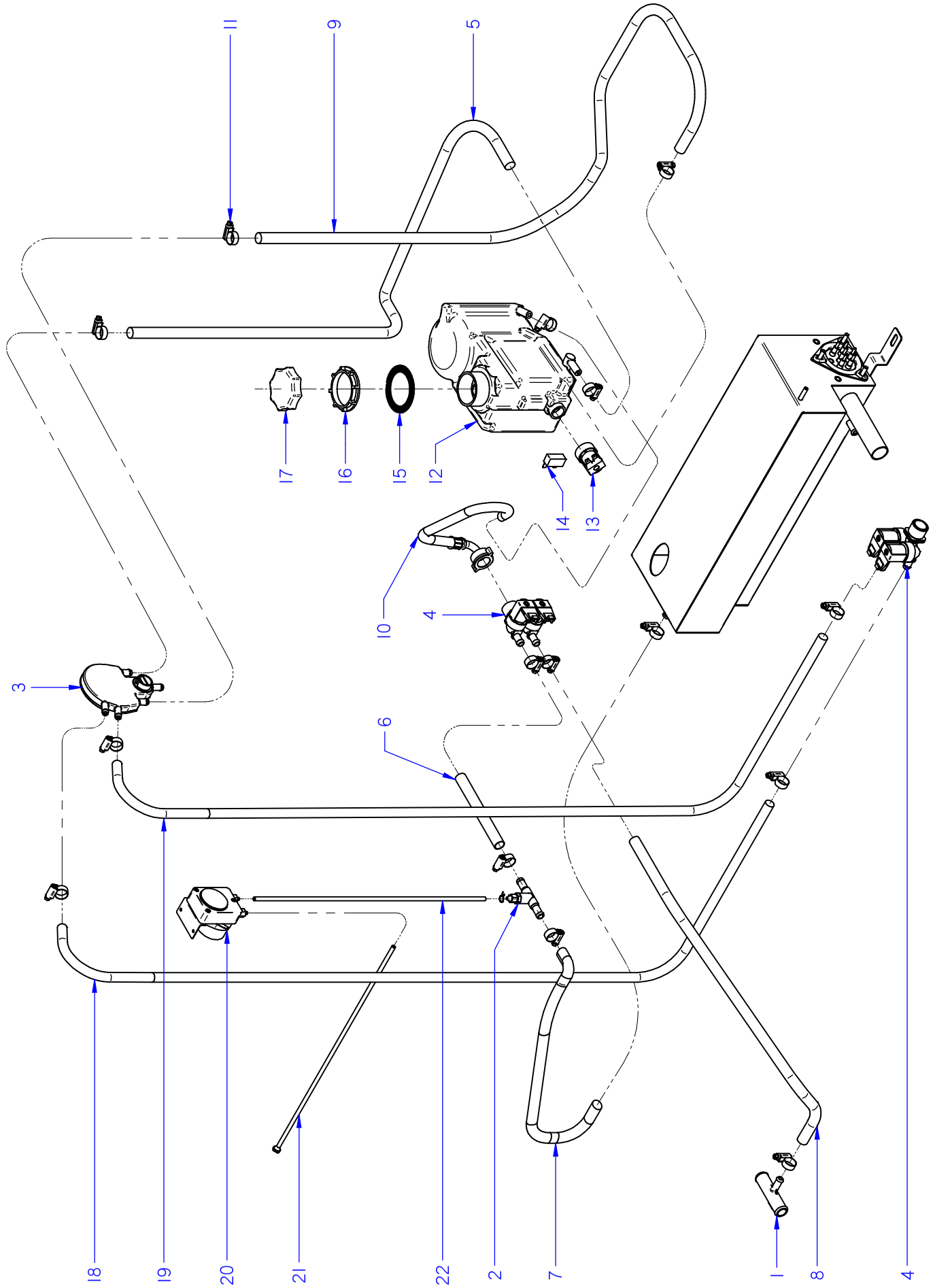

ITEM MARCADO EN COLOR = REPUESTO RECOMENDADO
COLOURED ITEM = RECOMMENDED SPARE PART

N plano / Drawing N.	Firma / Signature	Fecha / Date	Aparato / Appliance	Lamina / Sheet	
C-3319	Iban R.	2014-11	DESCALCIFICADOR / SOFTENER LAVAVAJILLAS COP-503 SOFT DISHWASHER	6	Fagor Industrial S.Coop. Onate

ZONA / ZONE	PARTE FUNCIONAL ACLARADO / FUNCTIONAL RINSE PART	LÁMINA / DRAWING	C-3319	FAGOR

ITEM	REFERENCIA REFERENCE	DENOMINACIÓN	DENOMINATION	COP-503 SOFT							RECOMMENDED	ELIMINADO ELIMINATED	INTRODUCIDO INTRODUCED	NOTAS / NOTES
1	12041520	EMPALME DESCALCIF.- DESAGÜE	SOFTENER-DRAIN JOINT	1										
2	12040714	RACOR EN T ANTIRRETORNO	T FITTING NON-RETURN	1										
3	12091121	AIR BREAK	AIR BREAK	1							X			
4	12110531	E.V.DOBLE 220/240V 50/60Hz	DOUBLE EV 220/240V 50/60Hz	2							X			
5	12114353	TUBO WRAS	WRAS PIPE	1										
6	11000083	TUBO GOMA NEGRA D 17x10	D 17x10 BLACK RUBBER PIPE	1										
7	11000083	TUBO GOMA NEGRA D 17x10	D 17x10 BLACK RUBBER PIPE	1										
8	11000083	TUBO GOMA NEGRA D 17x10	D 17x10 BLACK RUBBER PIPE	1										
9	12114353	TUBO WRAS	WRAS PIPE	1										
10	12115441	MANGUERA DESCALCIF.- EV. DOBLE	SOFTENER_DOUBLE EV PIPE	1										
11	12010036	ABRAZADERA 12-20	12-20 CLAMP	15										
12	12044603	DESCALCIFICADOR COMPLETO	COMPLETE SOFTENER	1										
13	12044600	MEDIA ELECTROVÁLVULA	HALF ELECTROVALVE	1										
14	12044602	INTERRUPTOR SAL	SALT REED	1										
15	12045142	JUNTA DESCALCIFICADOR Ø74xØ54	SOFTENER SEAL Ø74xØ54	1										
16	12045143	AMARRE JUNTA DESCALCIFICADOR	SOFTENER SEAL FASTENER	1										
17	12045145	TAPÓN DESCALCIFICADOR	SOFTENER TAP	1										
18	12114353	TUBO WRAS	WRAS PIPE	1										
19	12114353	TUBO WRAS	WRAS PIPE	1										
20	12092198	DOSIFICADOR ABRILLANTADOR	RINSE DISPENSER	1										
21	12024139	CONDUCTO ASPIRACIÓN AZKOY	AZKOY SUCTION PIPE	1										
22	11000079	CONDUCTO DOSIF. TRANSP 6X4	DISPENSER TRANSPARENT PIPE	1										

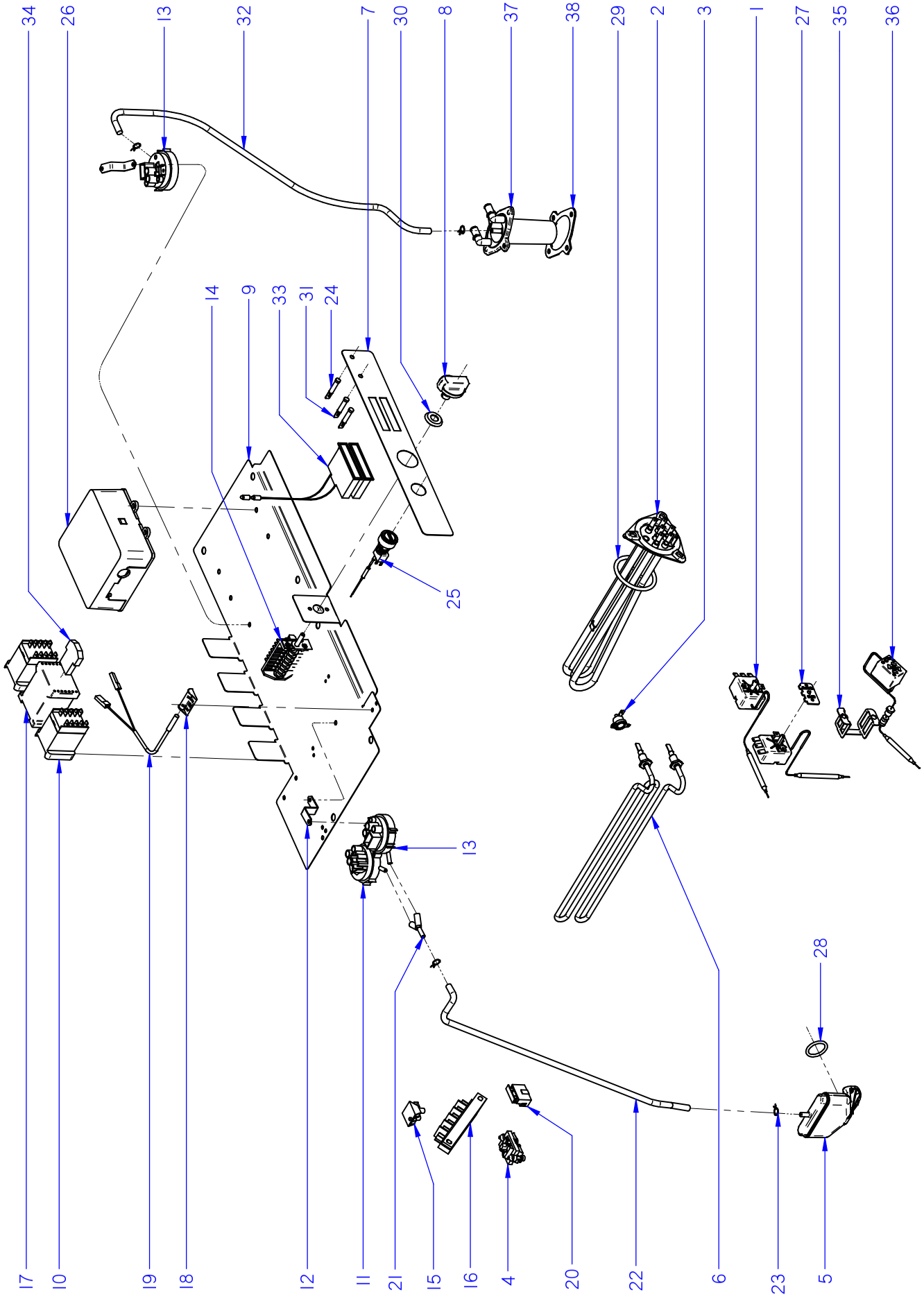

ITEM MARCADO EN COLOR = REPUESTO RECOMENDADO
COLOURED ITEM = RECOMMENDED SPARE PART

N plano / Drawing N.	Firma / Signature	Fecha / Date	Aparato / Appliance	Lamina / Sheet	
C-3320	Iban R.	2014-11	CONJUNTO ELECTRICO / ELECTRICAL PART LAVAVAJILLAS COP-503 DISHWASHER	7	Fagor Industrial S.Coop. FAGOR Onate

ZONA / ZONE	CONJUNTO ELECTRICO / ELECTRICAL PART	LÁMINA / DRAWING	C-3320	FAGOR

ITEM	REFERENCIA REFERENCE	DENOMINACIÓN	DENOMINATION	COP-503	COP-503 SOFT						RECOMMENDED	ELIMINADO ELIMINATED	INTRODUCIDO INTRODUCED	NOTAS / NOTES
1	12040858	TERMOSTATO REGULABLE 85ºC	REGULABLE THERMOSTAT 85ºC	2	2						X			
2	12090551	RESISTENCIA CALDERIN 5,60KW	BOILER'S RESISTOR 5,60KW	1	1						X			
3	12096597	TERM_SEG_261B_110ºC_FAST_90	SAFETY THER. 261B_110ºC_FAST_90	1	1									
4	12024230	RETENEDOR DE CABLE	CABLE RETAINER	1	1									
5	12093146	CAMPANA TANQUE	TUB'S PRESSURE CHAMBER	1	1						X			
6	12048965	RESISTENCIA TANQUE 2800W	TUB'S RESISTOR 2800W	1	1						X			
7	12092539	EMBELLECEDOR COP-503	COP-503 STICKER	1	_						X			
7	12092536	EMBELLECEDOR COP-503 SOFT	COP-503 SOFT STICKER	_	1						X			
8	12115972	CONJUNTO MANDO CONCEPT	CONCEPT KNOB ASSEMBLED	1	1						X			
9	12095635	SOP. COMPONENTES ELECTRICOS	ELECTRIC COMPONENTS SUPPORT	1	1									
10	12024011	CONTACTOR 230 V. 50-60 HZ 16A	230 V. 50-60 HZ 16A CONTACTOR	2	2						X			
11	12096970	PRESOSTATO 1,40-6,30 BAR SIMPLE	1,40-6,30 BAR PRESSURE SWITCH	1	1						X			
12	12098323	SOPORTE PRESOSTATO AF	PRESSURE SWITCH SUPPORT	2	2									
13	12096968	PRESOSTATO 1,40-6,30 BAR SIMPLE	1,40-6,30 BAR PRESSURE SWITCH	2	2						X			
14	12092712	CONMUTADOR DE 7 FUNCIONES	SWITCH FOR 7 FUNCTIONS	1	1									
15	12024110	REGLETA DE CONEXIONES	CONNECTION STRIP	1	1									
16	12025183	REGLETA AUXILIAR FV-122	AUX. CONNECTION STRIP FV-122	1	1									
17	12111795	CONTACTOR 230 V. 50-60 HZ 20A	230V. 16A 50-60 HZ 20A RELAY	1	1						X			
18	12024066	AMARRE INTERRUPTOR MAGNETICO	MAGNETIC SWITCH'S SUPPORT	1	1									
19	12024477	INTERRUPTOR MAGNETICO	MAGNETIC SWITCH	1	1						X			
20	12045569	BORNA PORTAFUSIBLE 13A 2,50MM2	13A 2,50MM2 FUSE TERMINAL	1	1									
21	12023510	RACORD EN Y	Y FITTING	1	1									
22	11000066	TUBO GOMA NEGRO D 8*4	BLACK RUBBER PIPE D 8*4	1	1									
23	12023707	BRIDA ELASTICA TUBO	ELASTIC CLAMP FOR PIPES	4	4									
24	12087178	PILOTO BLANCO	WHITE PILOT	1	2									
25	12115384	PULSADOR 5V DC 5A 1VIA 1POS	5V DC 5A 1WAY 1POS PUSHBUTTON	1	1						X			
26	12110837	CONTROL TARJETA 5 RELES	5 RELAY CONTROL CARD	1	1						X			
27	12044848	REGULADOR A 60ºC Tt DE 85ºC	60ºC Tt DE 85ºC REGULATOR	1	1									
28	12093145	JUNTA TORICA CAMPANA	PRESSURE CHAMBER'S O-RING	1	1									
29	12118319	JUNTA TORICA RESIST. CALDERIN	BOILER'S RESISTOR'S O-RING	1	1						X			
30	12024516	JUNTA CONMUTADOR	FUNCTIONS SWITCH SEAL	1	1									
31	12091434	PILOTO VERDE	GREEN PILOT	1	1									

ZONA / ZONE	CONJUNTO ELECTRICO / ELECTRICAL PART	LÁMINA / DRAWING	C-3320	FAGOR

ITEM	REFERENCIA REFERENCE	DENOMINACIÓN	DENOMINATION	COP-503	COP-503 SOFT						RECOMMENDED	ELIMINADO ELIMINATED	INTRODUCIDO INTRODUCED	NOTAS / NOTES
32	11000066	TUBO GOMA NEGRO D 8*4	BLACK RUBBER PIPE D 8*4	1	1									
33	12049669	TERMOSTATO 0A 120ºC 6MM 68X47	0A 120ºC 6MM 68X47 THERMOSTAT	2	2						X			
34	12112548	CONTACTOR AUXILIAR 250V 10A	250V 10A AUXILIARY CONTACTOR	1	1						X			
35	12022151	AMARRE LIMITADOR TECASA	TECASA THERMOST. SUPPORT	1	1									
36	12023830	TERMOSTATO DE SEGURIDAD 125ºC	SAFETY THERMOSTAT 125ºC	1	1						X			
37	12091478	CAMPANA CALDERIN	BOILER'S PRESSURE CHAMBER	1	1						X			
38	12118822	JUNTA CAMPANA CALDERIN	BOILER'S P.CHAMBERS SEAL	1	1									

ZONA / ZONE	VARIOS / VARIOUS		LÁMINA / DRAWING		FAGOR

ITEM	REFERENCIA REFERENCE	DENOMINACIÓN	DENOMINATION	COP-503								ELIMINADO ELIMINATED	INTRODUCIDO INTRODUCED	NOTAS / NOTES
	12009946	CABLEADO TENSOR	TENSIONER WIRING	1										
	12119914	INSTALACIÓN ELÉCTR. COP 48-64	48, 64, COP ELECTRICAL WIRING	1										
	12024651	CABLE DE ALIMENTACION 4X2.5MM2	POWER CORD 4X2.5MM2	1										
	12095673	CABLEADO CONTROL 5R A CONMUT.	5R CNTRL. TO FUNC.SWITCH WIRING	1										

ZONA / ZONE	RECOMENDADOS / RECOMMENDED		LÁMINA / DRAWING		FAGOR

ITEM	REFERENCIA REFERENCE	DENOMINACIÓN	DENOMINATION	COP-503	COP-503 DD	COP-503 B	COP-503 SOFT					ELIMINADO ELIMINATED	INTRODUCIDO INTRODUCED	NOTAS / NOTES
3	12043287	MOTOBOMBA 590KW 50Hz	WASHIG PUMP 590KW 50Hz	1	1	1	1							C-3315
3	12102834	MOTOBOMBA 590KW 60Hz	WASHIG PUMP 590KW 60Hz	1	1	1	1							C-3315
3A	12024376	CONDENSADOR 10MF	10MF CAPACITOR	1	1	1	1							C-3315
25	12024216	DOSIFIC. DGTE REGULABLE G300	REGUL. DETERG. DISPENSER G300	_	1	_	_							C-3315
5	12115471	MANGUERA DESAGÜE	DRAINING PIPE	1	1	_	1							C-3316
5	12023666	MANGUERA DESAGÜE	DRAINING PIPE	_	_	1	_							C-3317
8	12094265	BOMBA DESAGÜE	DRAINING PUMP	_	_	1	_							C-3317
1	12024233	BOMBA ACLARADO HANNING	HANNING RINSING PUMP	1	1	1	1							C-3318
6	12095427	E.V SIMPLE 220V SALIDA A 90º	SIMPLE E.V 90º EXIT	1	1	1	_							C-3318
7	12092198	DOSIFICADOR ABRILLANTADOR	RINSE DISPENSER	1	1	1	1							C-3318
22	12091121	AIR BREAK	AIR BREAK	1	1	1	1							C-3318
4	12110531	E.V.DOBLE 220/240V 50/60Hz	DOUBLE EV 220/240V 50/60Hz	_	_	_	2							C-3319
12	12044603	DESCALCIFICADOR COMPLETO	COMPLETE SOFTENER	_	_	_	1							C-3319
1	12040858	TERMOSTATO REGULABLE 85ºC	REGULABLE THERMOSTAT 85ºC	2	2	2	2							C-3320
2	12090551	RESISTENCIA CALDERIN 5,60KW	BOILER'S RESISTOR 5,60KW	1	1	1	1							C-3320
5	12093146	CAMPANA TANQUE	TUB'S PRESSURE CHAMBER	1	1	1	1							C-3320
6	12048965	RESISTENCIA TANQUE 2800W	TUB'S RESISTOR 2800W	1	1	1	1							C-3320
7	12092539	EMBELLECEDOR COP-503	COP-503 STICKER	1	1	1	_							C-3320
7	12092536	EMBELLECEDOR COP-503 SOFT	COP-503 SOFT STICKER	_	_	_	1							C-3320
8	12115972	CONJUNTO MANDO CONCEPT	CONCEPT KNOB ASSEMBLED	1	1	1	1							C-3320
10	12024011	CONTACTOR 230 V. 50-60 HZ 16A	230 V. 50-60 HZ 16A CONTACTOR	2	2	2	2							C-3320
11	12096970	PRESOSTATO 1,40-6,30 BAR SIMPLE	1,40-6,30 BAR PRESSURE SWITCH	1	1	1	1							C-3320
13	12096968	PRESOSTATO 1,40-6,30 BAR SIMPLE	1,40-6,30 BAR PRESSURE SWITCH	2	2	2	2							C-3320
17	12111795	CONTACTOR 230 V. 50-60 HZ 20A	230V. 16A 50-60 HZ 20A RELAY	1	1	1	1							C-3320
19	12024477	INTERRUPTOR MAGNETICO	MAGNETIC SWITCH	1	1	1	1							C-3320
25	12115384	PULSADOR 5V DC 5A 1VIA 1POS	5V DC 5A 1WAY 1POS PUSHBUTTON	1	1	1	1							C-3320
26	12110837	CONTROL TARJETA 5 RELES	5 RELAY CONTROL CARD	1	1	1	1							C-3320
29	12118319	JUNTA TORICA RESIST. CALDERIN	BOILER'S RESISTOR'S O-RING	1	1	1	1							C-3320
33	12049669	TERMOSTATO 0A 120ºC 6MM 68X47	0A 120ºC 6MM 68X47 THERMOSTAT	2	2	2	2							C-3320
34	12112548	CONTACTOR AUXILIAR 250V 10A	250V 10A AUXILIARY CONTACTOR	1	1	1	1							C-3320
36	12023830	TERMOSTATO DE SEGURIDAD 125ºC	SAFETY THERMOSTAT 125ºC	1	1	1	1							C-3320
37	12091478	CAMPANA CALDERIN	BOILER'S PRESSURE CHAMBER	1	1	1	1							C-3320

COP 503

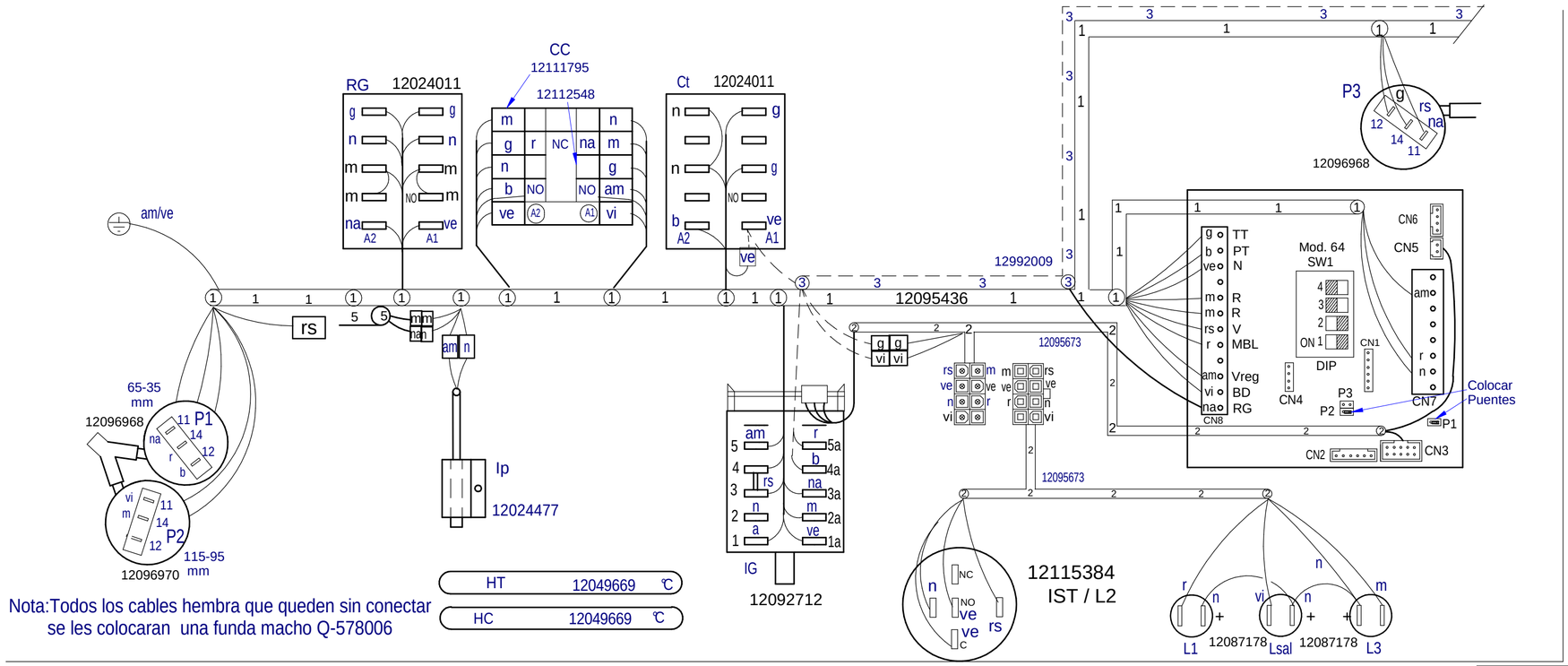

Nota:Todos los cables hembra que queden sin conectar se les colocaran una funda macho Q-578006

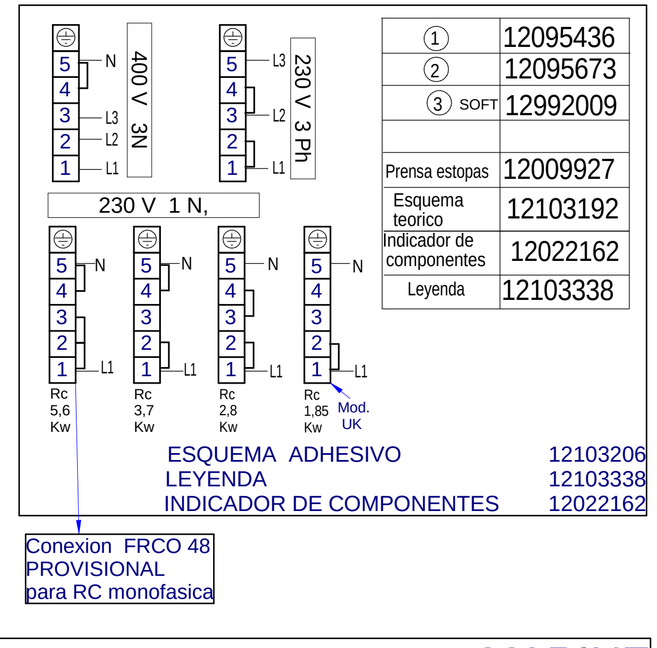

①	12095436
②	12095673
③ SOFT	12992009
Prensa estopas	12009927
Esquema teorico	12103192
Indicador de componentes	12022162
Leyenda	12103338

ESQUEMA ADHESIVO 12103206
LEYENDA 12103338
INDICADOR DE COMPONENTES 12022162

Conexion FRCO 48
PROVISIONAL
para RC monofasica

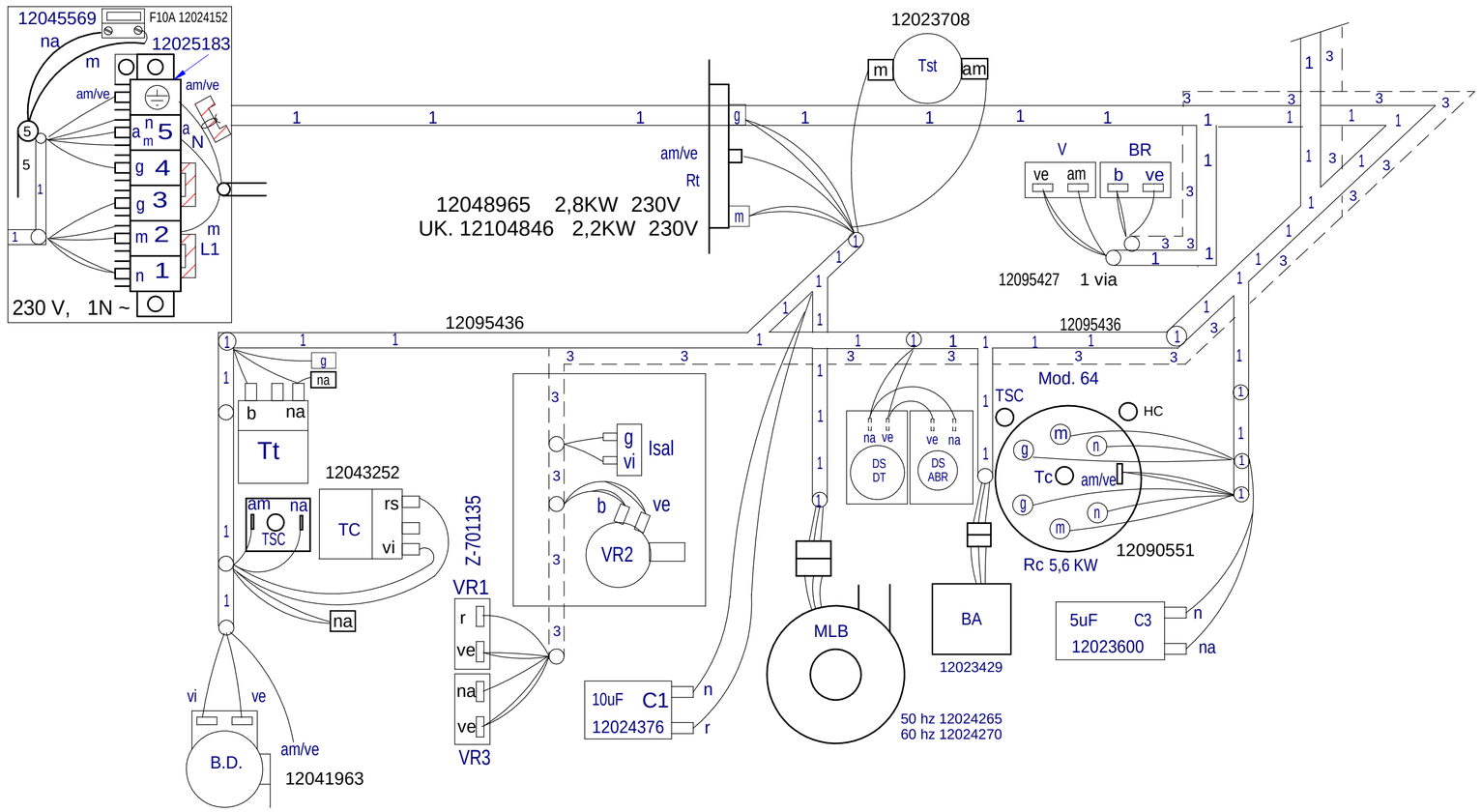

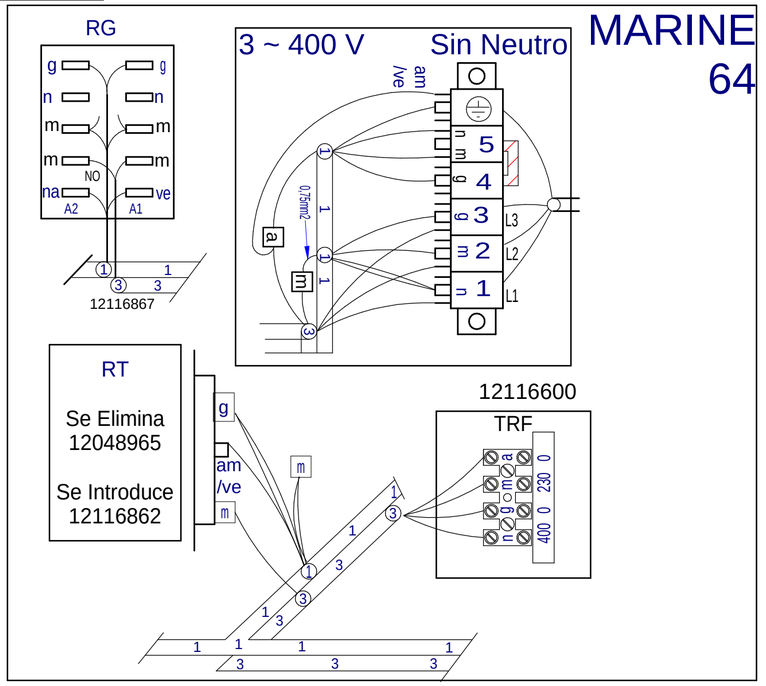

-	Plano Montaje COP 503	-	12111167		
Nº	TITLE	QTY	CODE	MATERIAL	TREATMENT

GENERAL TOLERANCES: ISO 2768-1 Very Coarse

LINEAR	Fine	Medium	Coarse	Very Coarse
<3mm	±0.05	±0.10	±0.15	
3-6mm	±0.05	±0.10	±0.20	
6-30mm	±0.10	±0.20	±0.50	
30-120mm	±0.15	±0.30	±0.80	
120-400mm	±0.20	±0.50	±1.20	
400-1000mm	±0.30	±0.80	±2.00	
1000-2000mm	±0.50	±1.20	±3.00	

GENERAL TOLERANCE FOR FORM AND POSITION: ISO 2768-2

ANGULAR	Fine	Medium	Coarse	Very Coarse
<10mm	±1º	±1º30'	±3º	
10-50mm	±30'	±1º	±2º	
50-120mm	±20'	±30'	±1º	
120-400mm	±10'	±15'	±30'	
>400mm	±5'	±10'	±20'	

LAVAVAJILLAS

FAGOR INDUSTRIAL

DESIGNED BY	VALIDATED BY	DATE
M.Maillo	A.Gallastegi	01.04.2014

SHEET FORMAT:	A2
DESING CENTER:	ONA
MAT STATUS:	
DOC STATUS:	
SHEET:	1 / 1
SCALE:	1:1

12111167 REVISION -

PROPOSED BY: - ISSUE DATE:

COP 503, B, DD, SOFT

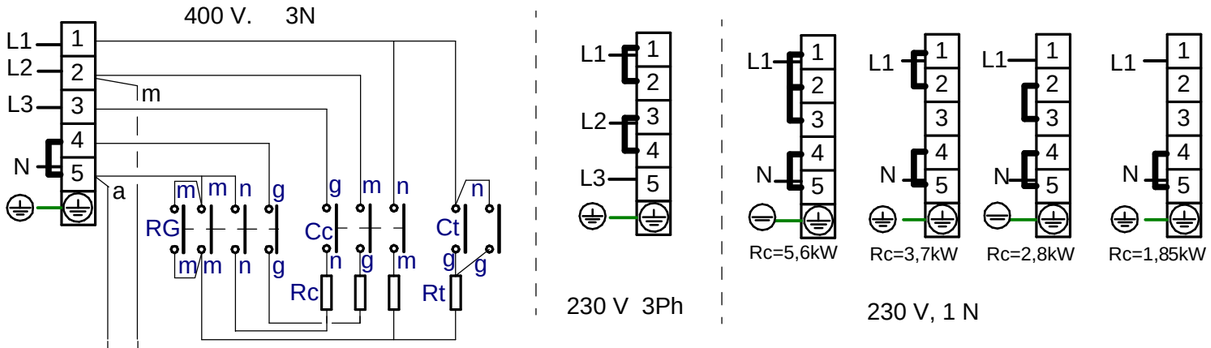

COP 503 MARINE

400 V. 3 Ph, Without Neutral

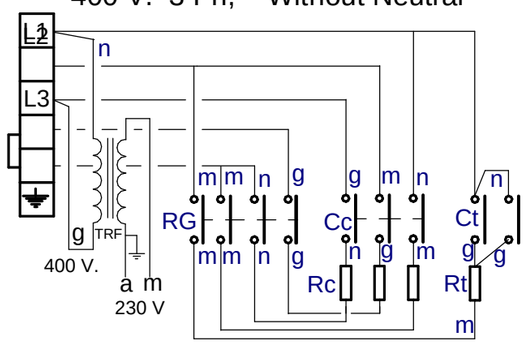

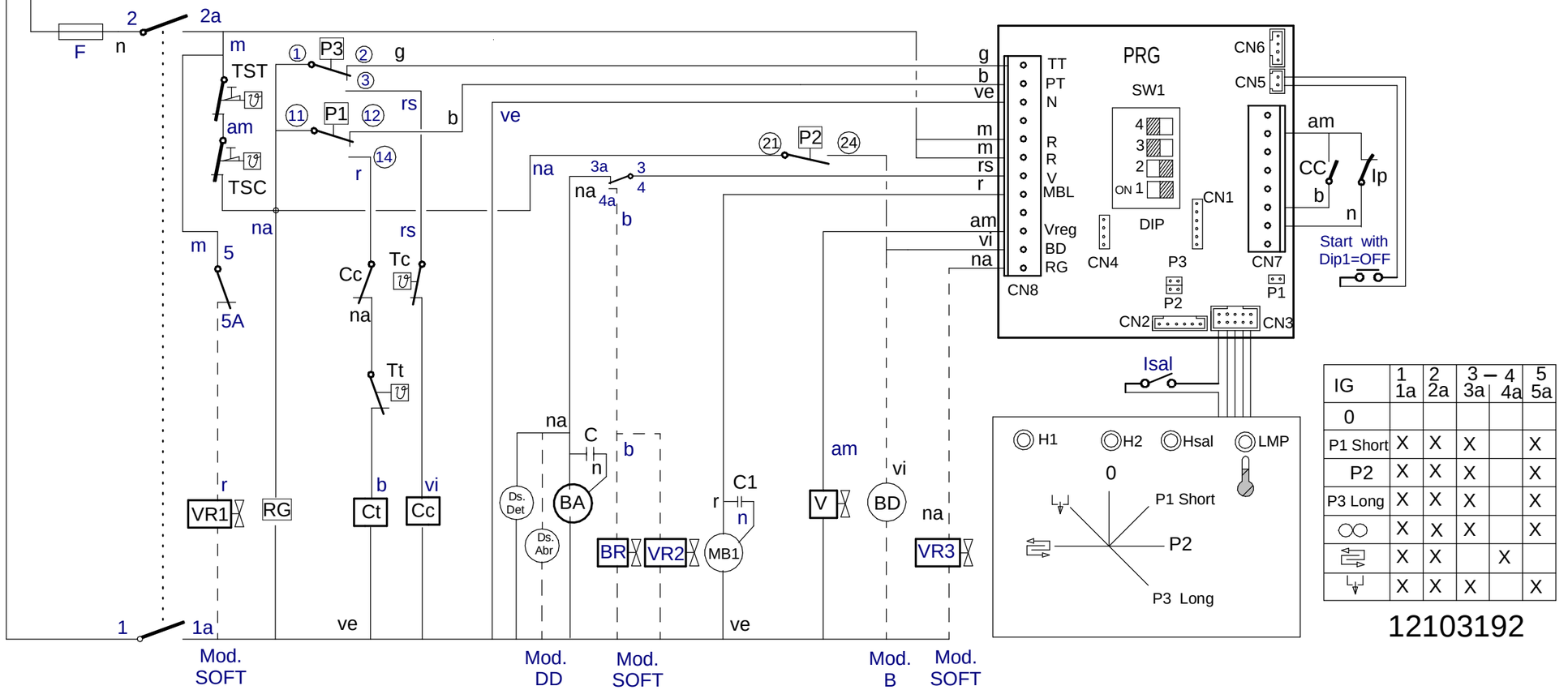

IG	1 1a	2 2a	3 – 4 3a	4a	5 5a
0					
P1 Short	X	X	X		X
P2	X	X	X		X
P3 Long	X	X	X		X
∞	X	X	X		X
⇆	X	X		X	
↳	X	X	X		X

12103192

-	Esquema Teorico COP 503	-	12103192		
Nº	TITLE	QTY	CODE	MATERIAL	TREATMENT

GENERAL TOLERANCES:	ISO 2768-1	Very Coarse

LINEAR	Fine	Medium	Coarse	Very Coarse
<3mm	±0.05	±0.10	±0.15	
3-6mm	±0.05	±0.10	±0.20	
6-30mm	±0.10	±0.20	±0.50	
30-120mm	±0.15	±0.30	±0.80	
120-400mm	±0.20	±0.50	±1.20	
400-1000mm	±0.30	±0.80	±2.00	
1000-2000mm	±0.50	±1.20	±3.00	

GENERAL TOLERANCE FOR FORM AND POSITION: ISO 2768-2

ANGULAR	Fine	Medium	Coarse	Very Coarse
<10mm	±1°	±1°30'	±3°	
10-50mm	±30'	±1°	±2°	
50-120mm	±20'	±30'	±1°	
120-400mm	±10'	±15'	±30'	
>400mm	±5'	±10'	±20'	

LAVAVAJILLAS

FAGOR INDUSTRIAL

DESIGNED BY	VALIDATED BY	DATE
M.MAILLO	X.Iruretagoyena	05.02.2014

SHEET FORMAT:	A3
DESING CENTER:	ONA
MAT STATUS:	
DOC STATUS:	
SHEET:	1 / 1
SCALE:	

12103192

REVISION

PROPOSED BY: M.MAILLO ISSUE DATE:

LEYENDA APERTURA FRONTAL Y CAPOTA

	ESPAÑOL	ENGLISH	FRANÇAIS	DEUTSCH	ITALIANO	中文
Ⓐ Ⓑ	Puntos de conexion con R	Conecction point with R	Points de conexion R	Anschlußpunkte mit R	Punti di collegamento con R	带R接触点
BA	Bomba Aclarado	Rinse pump				
BD	Bomba desagüe	Drain pump	Pompe de vidange	Abflußpumpe	Pompa scarico	排水泵
C1, C2, C3	Condensador	Condenser	Condensateur	Kondensator	Condensatore	电容
CMB	Contactor bomba lavado	Wash pump contactor	Contacteur pompe lavage	Türrelais	Contattore pompa lavaggio	清洗泵接触器
Cc	Contactor calentamiento calderin	Boiler heating contactor	Contacteur chauf. surchauffeur	Kontaktschütz Waschpumpe	Contattore riscaldamento boiler	升温箱加热接触器
Ct	Contactor calentamiento tanque	Tank heating contactor	Contacteur chaufage cuve	Kontaktschütz Boilerheizung	Contattore riscaldamento serbatoio	水箱加热接触器
CP	Rele puerta	Door relay	Relais porte	Kontaktschütz Heizung Tank	Rele porta	门继电器
Ds.	Dosificador	Detergent doser	Dosseur	Dosierer Spülmittel	Dosatore detersivo	清洗剂药液泵
E.B	Electrobomba de presion	Electric pressure pump	Electropompe de pression	Elektro-Drucksteigungspumpe	Electropompa pressione	电子压力泵
IG	Interruptor general	Main switch	Interrupteur general	Hauptschalter	Interruttore generale	主开关
IP	Micro puerta	Door microswitch	Micro porte	Mikroschalter Tür	Micro porta	门磁开关
H1	Piloto de encendido	Operation light	Voyant funcionement	Betriebsanzeigelampe	Spia accensione	运行指示灯
H2	Piloto marcha	Start light	Voyant demarrage	Startanzeigelampe	Spia avvio	开始指示灯
H3	Piloto maquina preparada	Light machine ready	Voyant machine prêt	Betriebsbereitschaftsanzeigelampe	Pilota macchina preparata	加热完成 指示灯
HSal	Piloto falta de Sal	Light Lack of Salt				
MB1, MB2	Bomba lavado	Wash pump	Pompe lavage	Waschpumpe	Pompa lavaggio	清洗泵
M	Motor programador	Motor programmer	Moteur du programmateur	Motor Programmiervorrichtung	Motore programmatore	程序电机
M Av. R	Motor program. avance rapido	Motor program. rapid advance	Moteur du progr.avance rapide	Motor Programmiervorrich. Betrieb	Motore programmatore avanzamento rapido	程序电机. 高速高级
M1	Micro programador marcha	Micro programmer on	Micro du programm. de marche	Motor Programmiervorrich. Waschen	Micro programma. di funzionamento	微程序 开
M2	Micro programador lavado	Micro programmer wash	Micro du programm. de lavage	Motor Programmiervorrich. Spülen	Micro programmatore di lavaggio	微程序 清洗
M3	Micro programador aclarado	Micro programmer rinse	Micro du programm. de rinçage	Motor Programmiervorrich. Vorlauf	Micro programmatore di risciacquo	微程序 喷淋
M4, M5	Micro programador avance	Micro programmer advance	Micro du programm. avance	Motor Programmiervorrich. schneller Vorlauf	Micro programmatore avanzamento	微程序 高级
P1, P3	Presostato	Pressure switch	Pressostat	Druckwächter	Pressostato	压力开关
P2	Presostato limitador	Hi-limit pressure switch	Pressostat de securité	Begrenzer Druckwächter	Pressostato limitatore	高水位限制 压力开关
R	Rele de Generador de A.C.	Generator relay	Relais du Generateur	Relais Generator	Rele Generatore	热水供应器继电器
RG	Rele General	Main Relay		Stromversorgungsanschluß Gener.		
Ⓛ1 Ⓛ2 Ⓛ3 Ⓝ	Alimentac. Generador A.C.	Water heater feeding	Alimentation generateur		Alimentazione generatore	热水供应器电源线
RC	Resistencia calderin	Boiler heating element	Resistance surchauffeur	Heizwiderstand Boiler	Resistenza boiler	升温箱加热管
RT	Resistencia tanque	Tank heater	Resistance cuve	Heizwiderstand Tank	Resistenza serbatoio	水箱加热管
Tt	Termostato tanque	Tank thermostat	Thermostat de cuve	Thermostat Tank	Termostato serbatoio	水箱温控器
TC	Termostato calderin	Boiler thermostat	Thermostat surchauffeur	Thermostat kessel	Termostato boiler	升温箱温控器
Tst	Limitador tanque	Tank limiter	Limitateur de cuve	Begrenzer Tank	Limitatore serbatoio	水箱安全温控器
TSC	Limitador calderin	Boiler Hi-limit	Limiteur surchauffeur	Begrenzer Boiler	Limitatore boiler	升温箱安全温控器
TSTP	Termostato termo-stop	Termo-stop Thermostat	Thermostat Termo-stop	Thermostat Termo-stop	Termostato Termo-stop	温度停止温控器
V	Electrovalvula llenado y aclarado	Fill and rinse valve	Electrovan. remplissage rinçage	Elektroventil Füllen und Spülen	Elettroval. riempimento e risciacquo	电磁阀
Vf	Electrovalvula Aclarado Frio	Cold Water rinse valve				
VR1, VR2, VR3, BR	Electrovalvula Descalcificacion	Soft Water valve				
VE,	Ventilador cuadro electrico	Switchboard fan	Ventilateur tableau electrique	Schalttafelventilator	Ventilatore quadro elettrico	风机
HRS	Sistema recuperacion energia	Heat Recovery System				

COLOR	COLORES	COLOUR	COULEURS	FARBEN	COLORE	颜色
a = BLU =	Azul	Blue	Bleu	Blau	Blu	蓝
am = YEL =	Amarillo	Yellow	Jaune	Gelb	Giallo	黄
am/ve = YEL/GRN	Amarillo/verde	Yellow / green	Jaune / vert	Gelb/grün	Giallo/verde	黄/绿
b = WHT =	Blanco	White	Blanc	Weiß	Bianco	白
g = GRY =	Gris	Grey	Gris	Grau	Grigio	灰
m = BRN =	Marrón	Brown	Marron	Braun	Marrone	棕
n = BLK =	Negro	Black	Noir	Schwarz	Nero	黑
na = ORG =	Naranja	Orange	Orange	Orange	Arancio	橙
r = RED =	Rojo	Red	Rouge	Rot	Rosso	红
rs = PNK =	Rosa	Pink	Rose	Rosa	Roseo	粉
ve = GRN =	Verde	Green	Vert	Grün	Verde	绿
vi = PRP =	Violeta	Purple	Violet	Violett	Viola	紫

12103338