KROMO	TABLE KI1710	REV 02

DISHWASHER KP 151

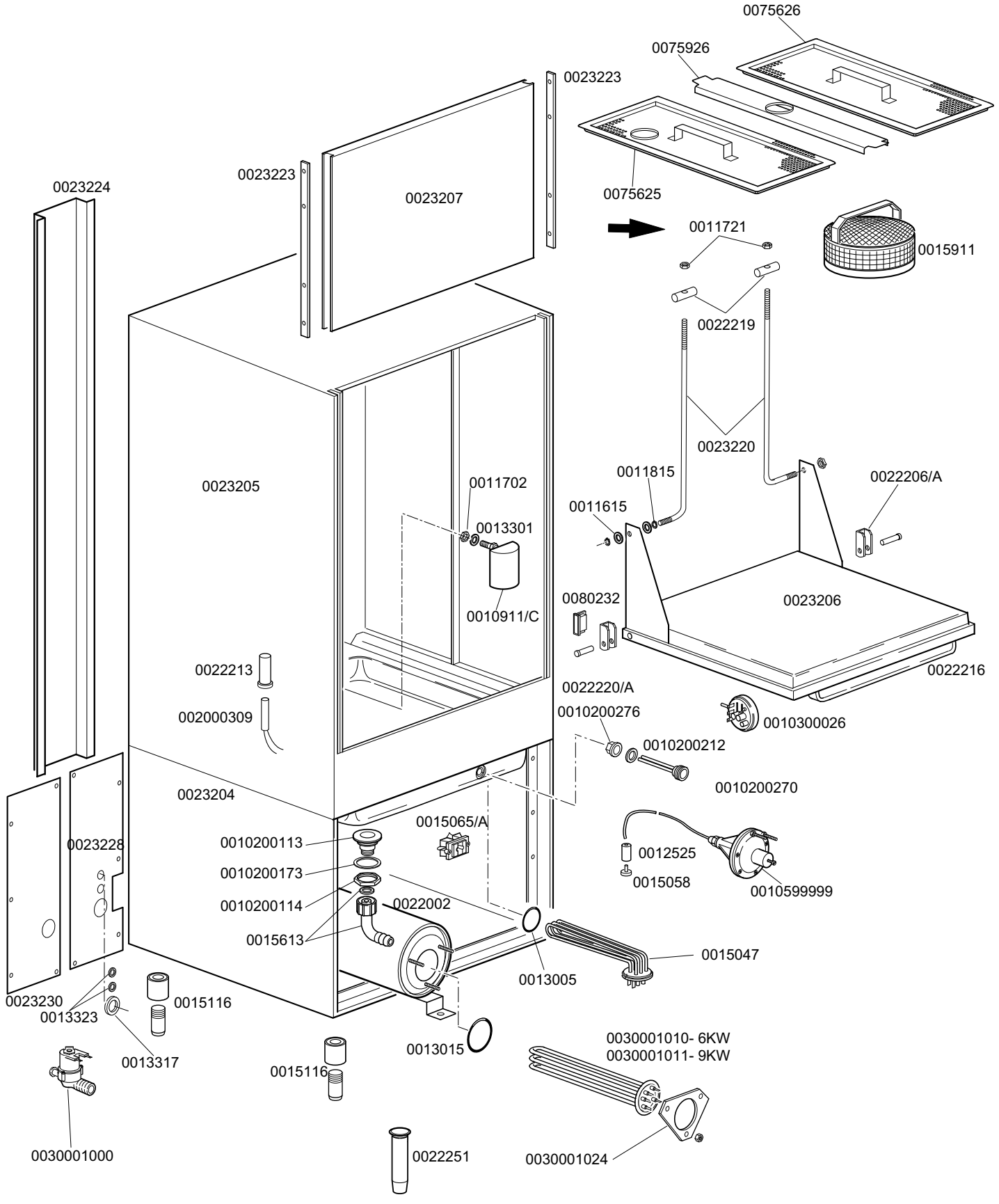

DISHWASHER KP 151			TABLE KI1710
CODE	**DESCRIPTION**	**CODE**	**DESCRIPTION**
0010200113	Floor drain		
0010200114	Drain pipe fitting nut		
0010200173	75x58x2 gasket		
0010200212	31x21x2 rubber gasket		
0010200270	Double sheath		
0010200276	1/2 inch nut for probe		
0010300026	Pressure switch		
0010599999	Shining product dosing device		
0011615	D. 8 washer		
0011702	M8 stainless steel nut		
0011721	M6 stainless steel nut		
0011815	8 d. stainless steel shaft clasp		
0012525	Counter weight for small filter		
0013005	OR 151 EPDM for heating element		
0013015	Boiler heating element OR gasket		
0013301	14x8x1,5 d. gasket		
0013317	40d. rubber cable-pass		
0013323	13d. rubber cable-pass		
0010911/C	Complete air trap		
0015047	3 kw tub heating element		
0015058	Small shining product suction filter		
0015065/A	Cable fastener with screw		
0015116	H. 110 2" complete small foot		
0015613	1" 1/4 x30 nylon elbow		
0015911	Complete filter		
002000309	Reed economiser		
0022002	140x490 boiler		
0022206/A	Hinge door KP 151		
0022213	KP 151 lower tie rod		
0022216	Neutral stainless steel handle		
0022219	Set of small cylinders for KP151 door		
0022220/A	Inox pin for door		
0022251	Overflow device		
0023204	Base KP 151		
0023205	Body KP 151		
0023206	Lower door KP 151		
0023207	Upper door KP 151		
0023220	Door rod KP 151		
0023223	Top door guide		
0023224	Rear Panel		
0023228	Right rear guard		
0023230	Left rear guard		
0030001000	Single solenoid valve		
0030001010	6 kw boiler heating element		
0030001011	9 kw boiler heating element		
0030001024	Flange for resistance 6/9		
0075625	Filter with hole		
0075626	Filter		
0075926	Axis double filter holder		
0080232	Magnet for reed		

KROMO	TABLE KI1730	REV 02

DISHWASHER KP 151

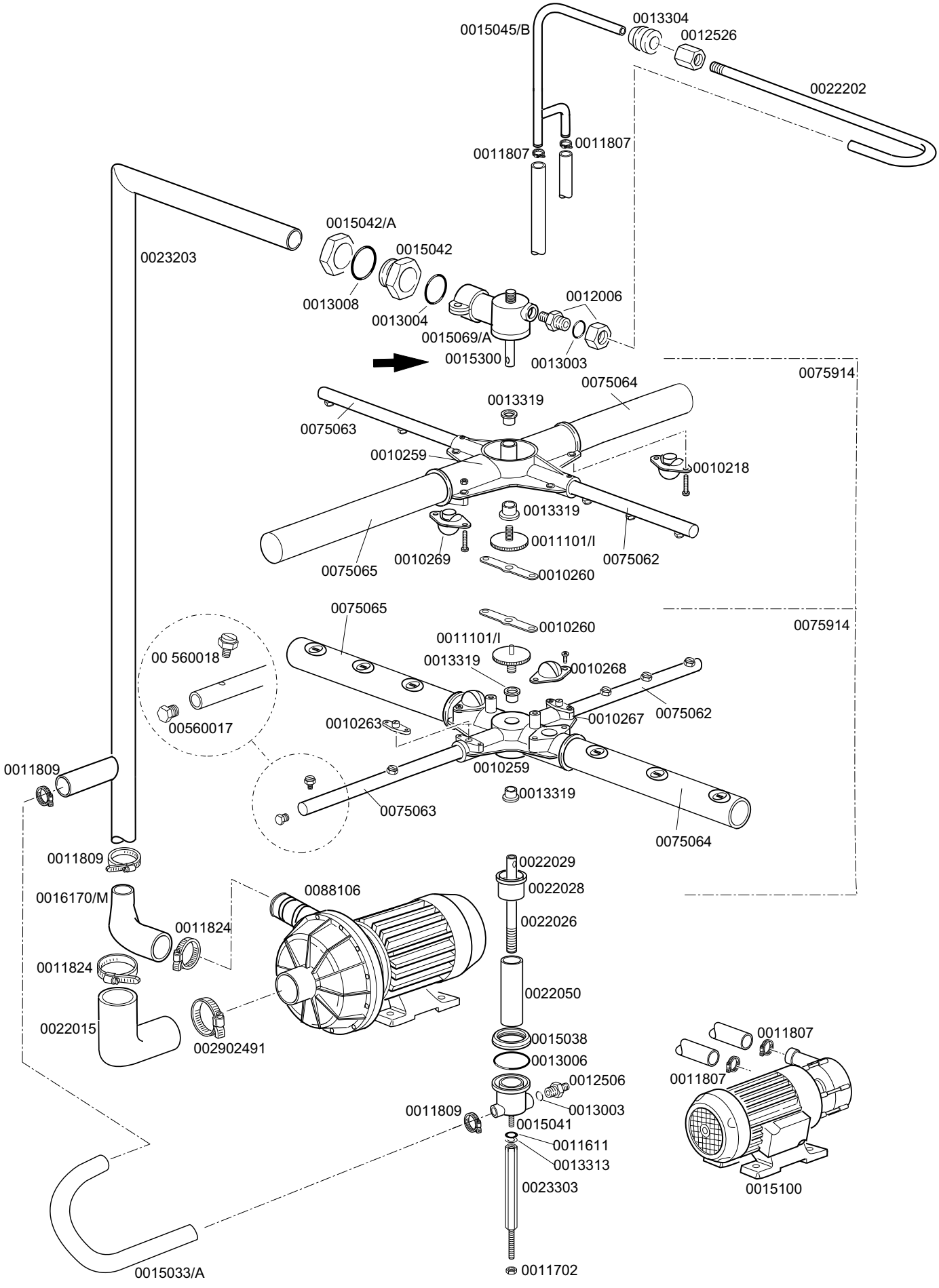

DISHWASHER KP 151			TABLE KI1730
CODE	**DESCRIPTION**	**CODE**	**DESCRIPTION**
0010260	Grey plate		
0010218	28 d. open flat nozzle		
0010259	4 ways big wash arm (grey)		
0010263	Open flat jet D.10 (grey)		
0010267	Closed wash jet D.10 (grey)		
0010268	Open flat wash jet D.28(grey)		
0010269	Closed flat rinse jet D.10(grey)		
0011101/I	Knurled stainless steel group screw		
0011611	M8 stainless steel sliding flat		
0011702	M8 stainless stel nut		
0011807	12-22 stainless steel clamp		
0011809	32-50 stainless steel clamp		
0011824	50-70 stainless steel clamp		
0012006	Complete 10 d. rinse pipe fitting		
0012506	10x17 rubber holder pipe		
0012526	12x14 M10x1 stainless steel coupling		
0013003	OR 112		
0013004	OR 3137		
0013006	OR 3156		
0013008	OR 147		
0013304	Pipe pass gasket		
0013313	8x15x2 d. EP gasket		
0013319	PTFE+CB H11sliding washer		
0015033/A	Tube lower washing		
0015038	Lower wash connection ferrule		
0015041	Lower distributor		
0015042	1"1/4 complete gas ferrule		
0015042/A	1" 1/4 nut		
0015045/B	3 way rinse pipe		
0015069/A	Top glass wash+rinse		
0015100	0,5HP pressure increase pump		
→ 0015300	Top rinse axis		
0016170/M	50-30 coupling		
0022015	Suction coupling		
0022026	10x68 d. lower rinse extension cor.		
0022028	Lower wash stainless steel glass		
0022029	Lower rinse axle		
0022050	Stainless steel coupling		
0022202	Top rinse pipe		
0023203	Upper wash ramp		
0023303	Lower tie rod		
002902491	60-80 stainless steel clamp		
00560017	Plug for pipe rinse		
00560018	Stainless steel complete rinse nozzle		
0075062	Right rinse pipe		
0075063	Left rinse pipe		
0075064	Right wash pipe		
0075605	Left wash pipe		
0075914	Lower+top wash group		
0088106	2,7HP pump		