Mod./Type: **_70/... PVE... - ...CFVE... EXTREME**

_90/... PVE... - ...CFVE... EXTREME

cod./num. 2531810.00

data/date: 06/08/2014

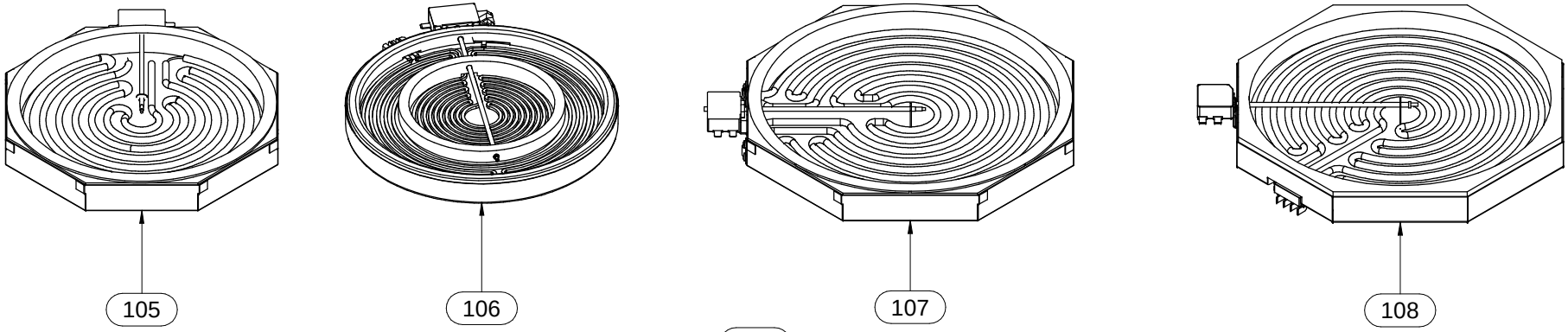

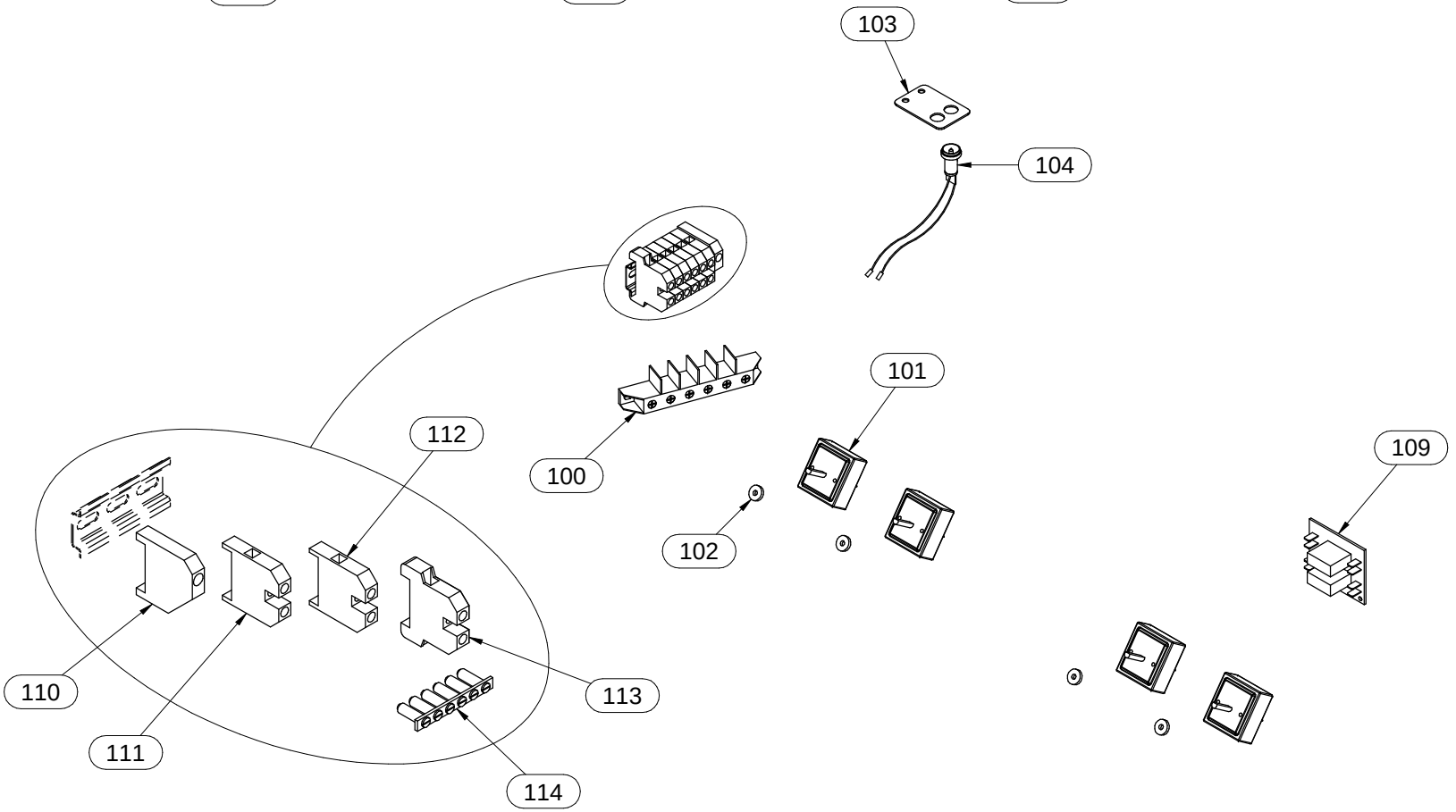

Mod./Type:	_70/... CFVE... EXTREME	cod./num.	2531812.00
		data/date:	08/08/2014

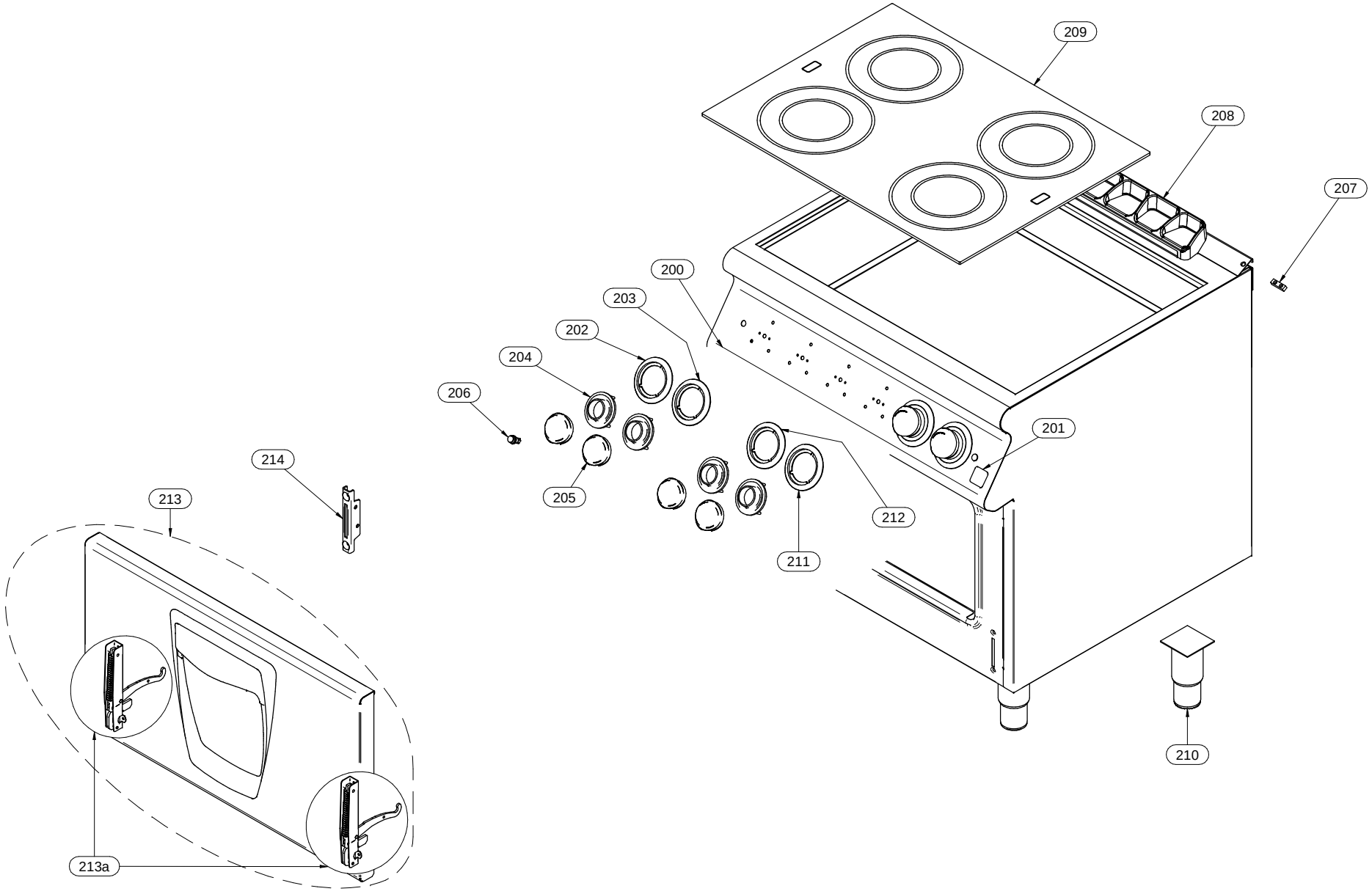

Mod./Type: **_70/... ...F...E... - _90/... ...F...E...**

ELECTRIC OVEN

cod./num. 2531630.00

data/date: 06/06/2014

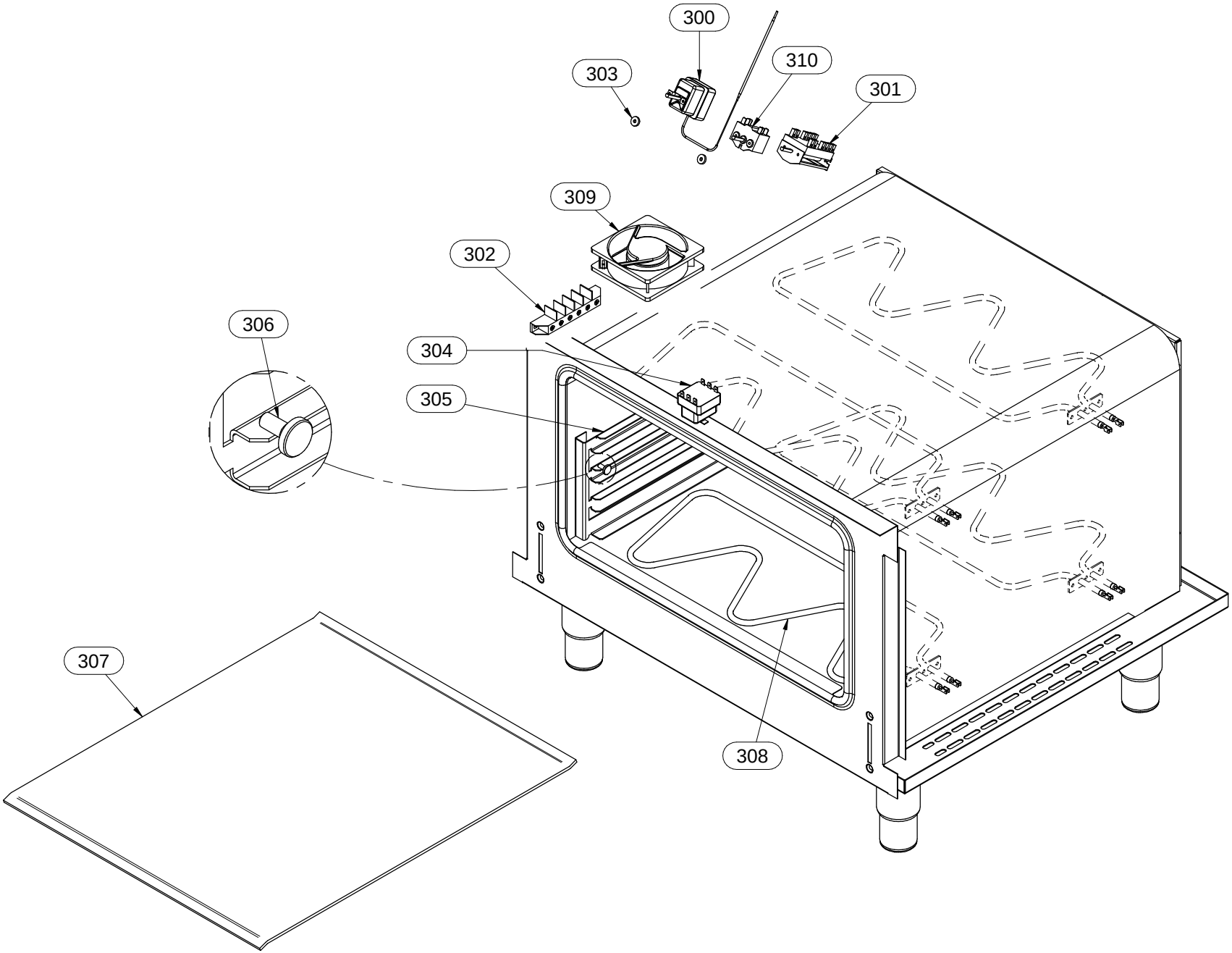

Mod.:	_70/... PVE... - CFVE... EXTREME _90/... PVE... - CFVE... EXTREME			cod. / num. 2531811.00 data / date 24/04/2014 rif. / ref. 2531810.00		_70/40 PVE...	_70/80 PVE... - _70/80 CFVE	_70/120 PVE...	_70/80 CFVE2	_90/40 PVE...	_90/80 PVE... - _90/80 CFVE	_90/120 PVE...	_90/80 PVE2...- _90/80 CFVE2	NOTE	
POS.	DESCRIZIONE	DESCRIPTION	DENOMINATION	BENENNUNG	COD.	Q.ty									
100	MORSETTIERA	TERMINAL BOARD	BORNES	KLEMMENBRETT	M566050500	1	1	-	-	1	1	-	-	FROM: 15.12.2011	TO: 31.03.2014
					963.007.00	1	1	-	-	1	1	-	-	FROM: 01.04.2014	TO:...
101	REGOLATORE ENERGIA	ENERGY REGULATOR	REGLEUR D'ENERGIE	ENERGIEREGLER	661.102.00	2	4	6	4	2	4	6	4		
102	GUARNIZIONE	WASHER	GUARNITURE	DICHTUNGSRING	953.020.00	2	4	6	4	2	4	6	4		
103	SUPPORTO	SUPPORT	SUPPORT	UNTERSTÜTZUNG	6221484.00	1	2	3	2	1	2	3	2		
104	LAMPADE CALORE RESIDUO	RESIDUAL HEAT INDICATOR LAMPS	TÉMOINS DE CHALEUR RÉSIDUELLE	RESTHITZELAMPE	663.082.00	2	4	6	4	2	4	6	4		
105	RESISTENZA 2,5kW	HEATING ELEMENT 2,5kW	RESISTANCE 2,5kW	HEINZELEMENT 2,5kW	665.052.00	2	4	-	4	-	-	-	-	FROM: 15.12.2011	TO: 31.03.2014
106	RESISTENZA 2,5kW	HEATING ELEMENT 2,5kW	RESISTANCE 2,5kW	HEINZELEMENT 2,5kW	665.106.00	2	4	6	4	-	-	-	-	FROM: 01.04.2014	TO:...
107	RESISTENZA 3,4kW	HEATING ELEMENT 3,4kW	RESISTANCE 3,4kW	HEINZELEMENT 3,4kW	965.041.00	-	-	-	-	2	4	-	4	FROM: 15.12.2011	TO: 31.03.2014
108	RESISTENZA 3,4kW	HEATING ELEMENT 3,4kW	RESISTANCE 3,4kW	HEINZELEMENT 3,4kW	965.069.00	-	-	-	-	2	4	6	4	FROM: 01.04.2014	TO:...
109	SCHEDA RELÉ	RELAY BOARD	CARTE DE RELAIS	RELAISPLATINE	663.048.00	-	-	-	-	2	4	6	4		
110	BLOCCAMORSETTI	TERMINAL STOPPER	BORNE BLOQUANT	BLÖCK-KLEMME	663.059.00	-	-	1	1	-	-	1	1		
111	MORSETTO	TERMINAL	BORNE	KLEMME	663.061.00	-	-	3	6	-	-	3	6		
112	MORSETTO BLU	BLUE TERMINAL	BORNE BLUE	NULL-KLEMME	663.076.00	-	-	3	-	-	-	3	-		
113	MORSETTO TERRA - PE	PE-TERMINAL	BORNE PE	ERD-KLEMME	663.060.00	-	-	1	1	-	-	1	1		
114	BARRETTE COLLEGAMENTO	CONNECTOR PIN	BARRETTE DE CONNECTION	VERBINDUNG-STAB	663.056.00	-	-	1	1	-	-	1	1		
115															
116															
117															
118															
119															
120															
121															
122															
123															
124															
125															
126															
127															
128															
129															
130															
131															
132															
133															
134															
135															
136															
137															
138															
139															
140															
141															
142															

Mod.:	_70/... CFVE... EXTREME			cod. / num. 2531813.00 data / date 08/08/2014 rif. / ref. 2531812.00		EM70/80 CFVE	EM70/80 CFVE2	NOTE	
POS.	DESCRIZIONE	DESCRIPTION	DENOMINATION	BENENNUNG	COD.	Q. ty			
200	CRUSCOTTO	CONTROL PANEL	BANDEAU	BEDIENBLENDE	9111302.00	1	1		
201	MARCHIO	BRAND NAME	MARQUE	MARKENZEICHEN	982.021.00	1	1	**FROM: 15.12.2011**	**TO: 31.01.2014**
					982.023.00	1	1	**FROM: 01.02.2014**	**TO:...**
202	SERIGRAFIA	SCREEN PRINT	SÉRIGRAPHIE	SIEBDRUCK	910.171.00	2	2		
203	SERIGRAFIA	SCREEN PRINT	SÉRIGRAPHIE	SIEBDRUCK	910.172.00	2	2		
204	LABIRINTO	LABYRINTH	LABYRINTHE	LABYRINTH	256.235.00	6	6		
205	MANOPOLA	KNOB	BOUTON	DREHKNOPF	256.234.00	6	6		
206	LAMPADA SPIA ARANCIO	ORANGE INDICATOR LIGHT	LAMPE TEMOIN ORANGE	ORANGE KONTROLLAMPE	963.013.00	2	2		
207	PIASTRINA GIUNZIONE	FIXING PLATE	PLAQUETTE FIXAGE	BEFESTIGUNGSPLATTE	941.130.00	1	1		
208	GRIGLIA CAMINO	FLUE GRIDDLE	GRILLE POUR CHEMINÉE	KAMINROST	982.013.00	1	1		
209	VETROCERAMICO	GLASS-CERAMIC	VITRO-CÉRAMIQUE	GLASKERAMIK	655.014.00	1	1	**FROM: 15.12.2011**	**TO: 31.03.2014**
					655.016.00	1	1	**FROM: 01.04.2014**	**TO:...**
210	PIEDINO	FOOT	PIED	STELLFUSS	912.090.00	4	4	**FROM: 15.12.2011**	**TO: 17.05.2013**
					912.090.14	4	4	**FROM: 18.05.2013**	**TO:...**
211	SERIGRAFIA	SCREEN PRINT	SÉRIGRAPHIE	SIEBDRUCK	910.193.00	1	1		
212	SERIGRAFIA TERMOSTATO	THERMOSTAT SCREEN PRINT	SÉRIGRAPHIE THERMOSTAT	SIEBDRUCK DES THERMOSTAT	910.175.00	1	1		
213	PORTA	DOOR	PORTE	TÜR	910.297.00	1	1		
213a	CERNIERA	JOINT	CHARNIERE	SCHARNIER	684.030.00	2	2		
214	PORTARULLINO	ROLL HOLDER	PORTE-AIGUILLE DE ROULEMENT	ROLLE-TRÄGER	684.011.00	2	2		
215									
216									
217									
218									
219									
220									
221									
222									
223									
224									
225									
226									
227									
228									
229									
230									

Mod.:	_70/… …F…E… - _90/… …F…E… ELECTRIC OVEN			cod. / num. 2531631.00 data / date 02/05/2014 rif. / ref. 2531630.00		_70/……FGE…	_70/……FE…	_70/… TPFE…	_90/……FGE…	_90/160 …FGE…	_90/……FE…	_90/… TPFE…	NOTE
POS.	DESCRIZIONE	DESCRIPTION	DENOMINATION	BENENNUNG	COD.	Q. ty							
300	TERMOSTATO	THERMOSTAT	THERMOSTAT	THERMOSTAT	661.114.00	1	1	1	1	2	1	1	
301	COMMUTATORE FORNO	OVEN CHANGE-OVER SWITCH	COMMUTATEUR FOUR	UMSCHALTER BACKOFEN	661.113.00	1	1	1	1	2	1	1	
302	MORSETTIERA	TERMINAL BOARD	BORNES	KLEMMENBRETT	M566050500	1	-	-	1	1	-	-	
303	GUARNIZIONE	WASHER	GUARNITURE	DICHTUNGSRING	953.020.00	2	2	2	2	4	2	2	
304	TERMOSTATO SICUREZZA	SAFETY THERMOSTAT	THERMOSTAT DE SECURITE	TEMPERATURBEGRENZER	661.115.00	1	1	1	1	2	1	1	
305	REGGIGRIGLIA	TRAY RACK	PORTE-PLAQUES	EINHÄNGEGESTELL	622.967.00	2	2	2	2	4	2	2	
306	FISSAGGIO REGGIGRIGLIA	TRAY RACK FIXING	FIXAGE PORTE-PLAQUES	BEFESTIGUNG DES EINHÄNGEGESTELLS	641.090.00	4	4	4	4	8	4	4	
307	SUOLA FORNO	INNER OVEN SOLE	SOLE DU FOUR	OFENINNENBODEN	635.029.00	1	1	1	1	2	1	1	
308	RESISTENZA FORNO	OVEN HEATING ELEMENT	RESISTANCE DU FOUR	BACKOFEN HEINZELEMENT	965.060.00	4	4	4	4	8	4	4	
309	VENTOLA	FAN	VENTILATEUR	LÜFTERRAD	764.055.00	-	-	1	-	-	-	1	
310	COMMUTATORE	CHANGE-OVER SWITCH	COMMUTATEUR	UMSCHALTER	661.093.00	-	-	1	-	-	-	1	
311													
312													
313													
314													
315													
316													
317													
318													
319													
320													
321													
322													
323													
324													
325													
326													
327													
328													
329													
330													
331													
332													
333													
334													
335													
336													
337													
338													
339													
340													