DESPIECE TECNICO

Barbacoa a gas
Gas charcoal grills
Charcoal á gaz
Gas lavastein grills
Griglie pietra lavica a gas
Grelhadores de pedra lávica

GAMA SNACK

Modelos:

BG6-05 I

Febrero 2010 February

Revisado Mayo 2013 May Revised

FAGOR

FAGOR INDUSTRIAL

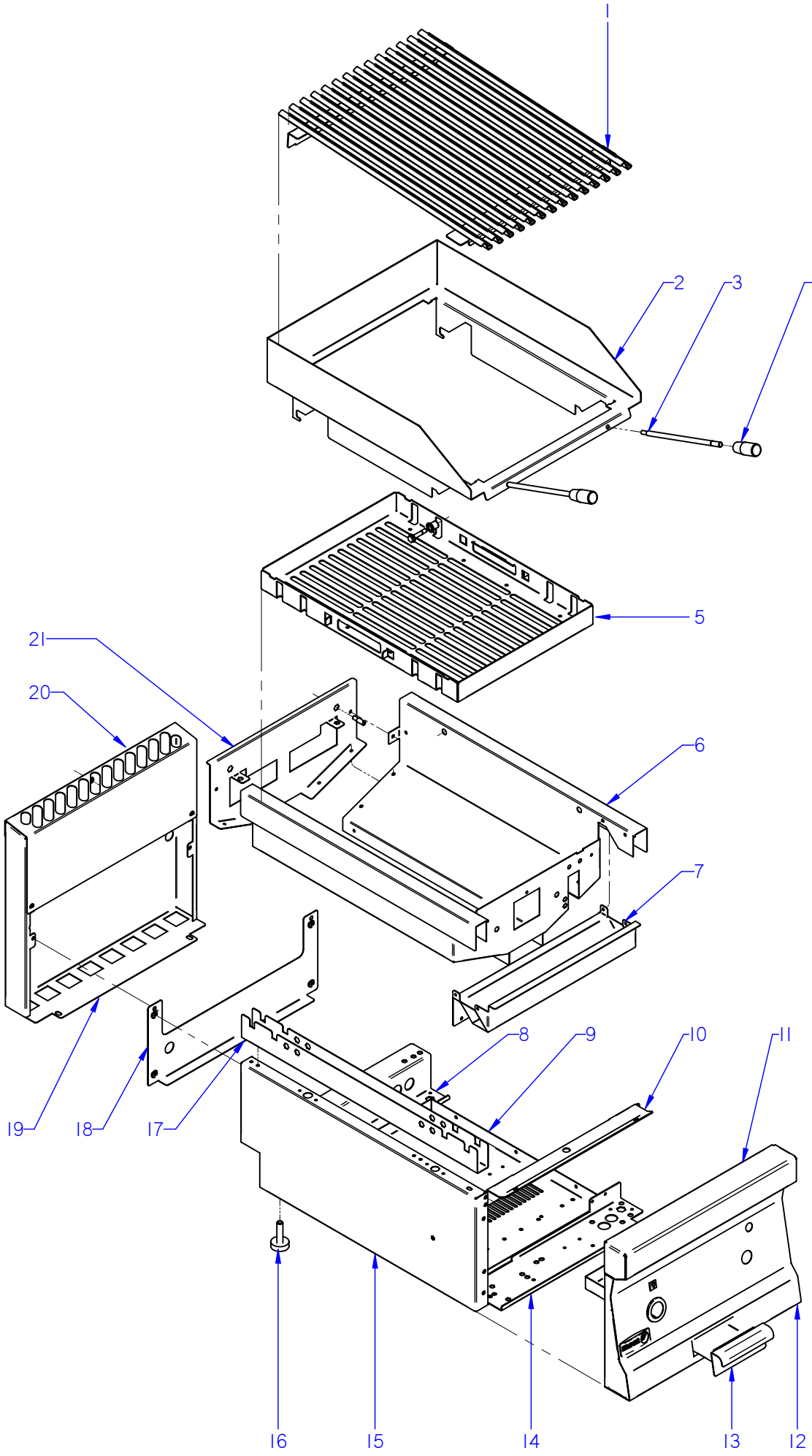

ITEM MARCADO EN COLOR = REPUESTO RECOMENDADO
COLOURED ITEM = RECOMMENDED SPARE PART

N plano	Firma	Fecha	Aparato	MUEBLE	Lamina	
C-2524		2010-02	BARBACOA BG6-05 I		1	Fagor Industrial S.Coop. FAGOR Oñate

MOD.	BARBACOA	ZONA	MUEBLE / UNIT	PLANO	C-2524

ITEM	CODIGO	DENOMINACION	TEXTO	BG6-05 I							NOTAS
1	J225406000	PARRILLA DE INOXIDABLE G600	CAST IRON GRILLE G600	1							
2	J225407000	SOPORTE PARRILLA BARBACOA	GRILLE SUPPORT UNIT	1							
	Q151336000	TORNILLO SOPORTE GUIAS	GUIDE SUPPORT BOLT	4							
3	H125417000	ASA BARBACOA 750 Q	BARBECUE HANDLE 750 Q	2							
	Q162040000	TUERCA EXAGONAL M6	HEXAGONAL NUT M6	4							
4	T065460000	EMPUÑADURA	HANDLE	2							
5	J222601000	REJILLA INOX. COMPLETA G.600	COMPLETE INOX. GRILLE G.600	1							
6	J222603000	CAJA INTERIOR COMPLETA	COMPLETE INTERIOR BOX	1							
	Q412002000	REMACHE AVINOX Ø4X10MM	RIVET AVINOX Ø4x10MM	10							
	Q221343000	REMACHE EXAGONAL M6	HEXAGONAL RIVET M6	4							
	H125418000	TORNILLO SIST. ELEVACION	ELEVATION SYST. BOLT	4							
	N100322000	COJINETE AUTOLUBRICADO	SELF LUBRICATED BEARING	4							
	Q412002000	REMACHE AVINOX Ø4X10MM	RIVET AVINOX Ø4x10MM	8							
7	J225401000	ANTERIOR INTERIOR MESA	FRONT INTERIOR BENCH	1							
	Q221343000	REMACHE EXAGONAL M6	HEXAGONAL RIVET M6	2							
	Q419005000	REMACHE 4X8 ALMG3 / ALUMINIO	RIVET 4X8 ALMG3 / ALUMINIUM	6							
	Q412002000	REMACHE AVINOX Ø4X10MM	RIVET AVINOX Ø4x10MM	3							
8	J002601000	SOPORTE POSTERIOR	BACK SUPPORT	1							
	Q221342000	REMACHE EXAGONAL M5	HEXAGONAL RIVET M5	6							
	Q221345000	REMACHE EXAGONAL M10	HEXAGONAL RIVET M10	2							
	Q419005000	REMACHE 4X8 ALMG3 / ALUMINIO	RIVET 4X8 ALMG3 / ALUMINIUM	4							
9	J102611000	BASE INFERIOR FTG6-05	LOWER BASE FTG6-05	1							
	Q419005000	REMACHE 4X8 ALMG3 / ALUMINIO	RIVET 4X8 ALMG3 / ALUMINIUM	6							
	Q221342000	REMACHE EXAGONAL M5	HEXAGONAL RIVET M5	2							
10	J102616000	GUÍA PANEL PORTAMANDOS	GUIDE PANEL OF CONTROLS	1							
	Q221342000	REMACHE EXAGONAL M5	HEXAGONAL RIVET M5	4							
	Q012031000	TORNILLO EXAGONAL M5x10 A304	HEXAGONAL BOLT M5x10 A304	4							
11	J105432000	ANTERIOR FRY-TOP 400	FRONT FRY-TOP 400	1							

MOD.	BARBACOA	ZONA	MUEBLE / UNIT	PLANO	C-2524

ITEM	CODIGO	DENOMINACION	TEXTO	BG6-05 I							NOTAS
12	J222802000	PORTAMANDOS COMPL. BG6-05	CONTROL HOLDER BG6-05	1							
	U022836000	ESCUDO FAGOR	FAGOR EMBLEM	1							
	Q221023000	CLIP SUJECIÓN RÁPIDA Ø5	RAPID CONNECT CLIP Ø5	2							
	Q419005000	REMACHE 4x8 ALMG3 / ALUMINIO	RIVET 4X8 ALMG3 / ALUMINIUM	6							
	Q012031000	TORNILLO EXAGONAL M5x10 A304	HEXAGONAL BOLT M5x10 A304	2							
	Q302022000	ARANDELA 16x6x1,2 A304	WASHER 16x6x1.2 A304	2							
	Q221343000	REMACHE EXAGONAL M6	HEXAGONAL RIVET M6	2							
13	J222805000	RECOGEGRASAS COMPL. BG6-05	GREASE COLLECTION BG6-05	1							
14	J142601000	SOPORTE FRONTAL FG6-05	FRONT SUPPORT FG6-05	1							
	Q221342000	REMACHE EXAGONAL M5	HEXAGONAL RIVET M5	1							
	Q221345000	REMACHE EXAGONAL M10	HEXAGONAL RIVET M10	2							
	Q419005000	REMACHE 4X8 ALMG3 / ALUMINIO	RIVET 4X8 ALMG3 / ALUMINIUM	4							
15	J222811000	PANEL LATERAL IZDO. BG6-05	LEFT SIDE PANEL BG6-05	1							
S/Nº	J222812000	PANEL LATERAL DCHO. BG6-05	RIGHT SIDE PANEL BG6-05	1							
	Q221342000	REMACHE EXAGONAL M5	HEXAGONAL RIVET M5	2							
16	Z200107000	PATA REGULABLE	ADJUSTABLE LEG	4							
17	J222602000	SOPORTE ENCIMERA BG6-05	TOP SUPPORT FG6-05	2							
	Q419005000	REMACHE 4X8 ALMG3 / ALUMINIO	RIVET 4X8 ALMG3 / ALUMINIUM	6							
18	J112803000	PANEL POSTERIOR FRY-TOP 400	REAR PANEL FRY-TOP 400	1							
	Q419005000	REMACHE 4x8 ALMG3 / ALUMINIO	RIVET 4X8 ALMG3 / ALUMINIUM	4							
19	J142809000	PROTECC. CHIMENEA POST. 400	PROTECTION CHIMEMEY POS.	1							ELIMINADA 01.07.2010
19	J222810000	PROTECC. CHIMENEA POST. 400	PROTECTION CHIMEMEY POS.	1							INTRODUC. 01.07.2010
	Q012031000	TORNILLO EXAGONAL M5x10 A304	HEXAGONAL BOLT M5x10 A304	4							
20	J142810000	PROTECCION CHIMENEA ANT. 400	PROTECTION CHIMENEY ANT	1							ELIMINADA 01.04.2010
20	J142829000	PROTECCION CHIMENEA FREID.	PROTECTION CHIMENEY	1							ELIMINADA 01.07.2010
20	J222809000	PROTECCION CHIMENEA ANT. 400	PROTECTION CHIMENEY	1							INTRODUC. 01.07.2010
	Q419005000	REMACHE 4X8 ALMG3 / ALUMINIO	RIVET 4X8 ALMG3 / ALUMINIUM	4							
21	J222604000	POSTER. INTERIOR MESA BG6-05	REAR INTERIOR BENCH BG6-05	1							
	Q221342000	REMACHE EXAGONAL M5	HEXAGONAL RIVET M5	2							
	Q221343000	REMACHE EXAGONAL M6	HEXAGONAL RIVET M6	2							
	Q412002000	REMACHE AVINOX Ø4X10MM	RIVET AVINOX Ø4x10MM	2							

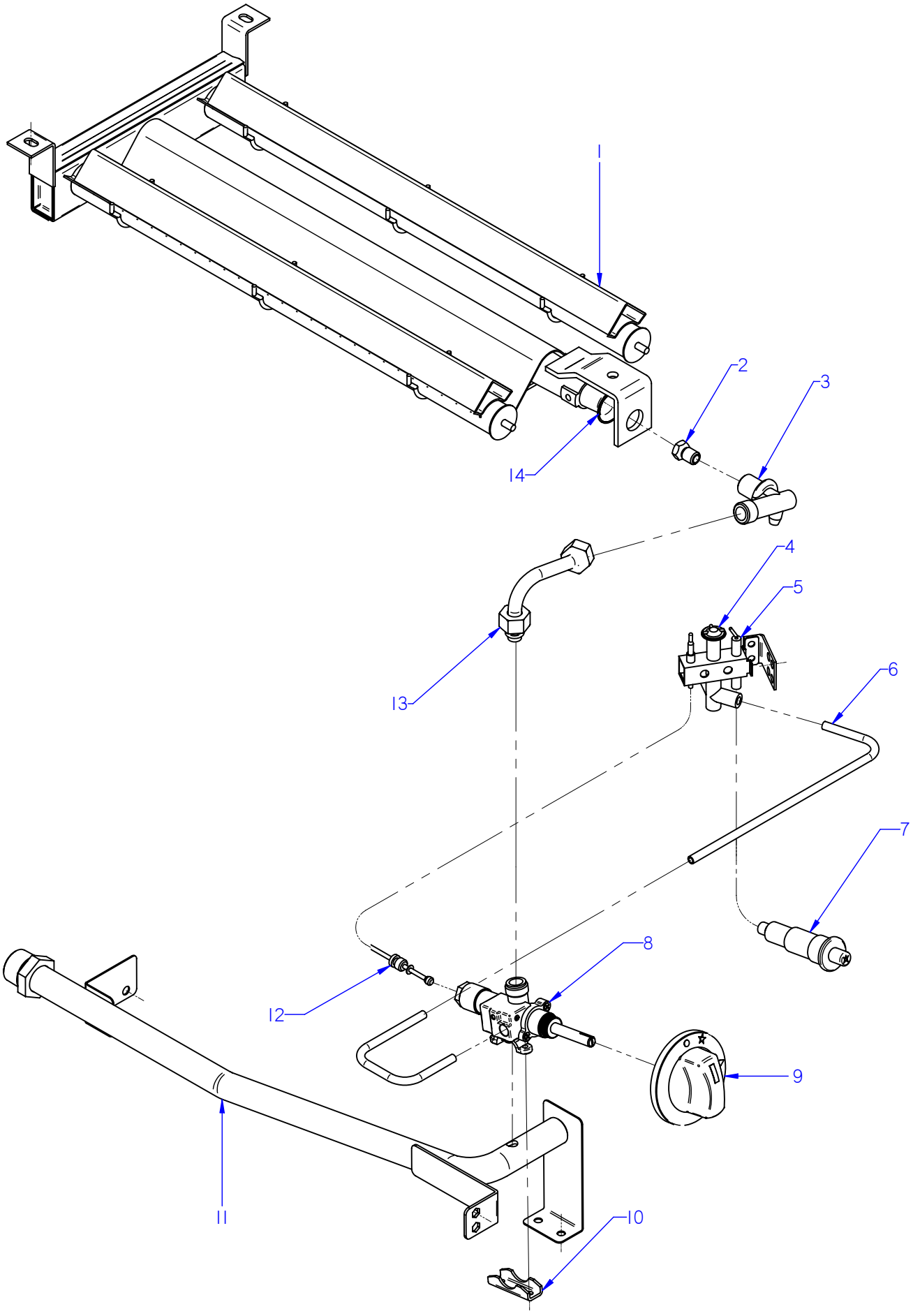

ITEM MARCADO EN COLOR = REPUESTO RECOMENDADO
COLOURED ITEM = RECOMMENDED SPARE PART

N plano	Firma	Fecha	Aparato	CONJUNTO FUNCIONAL	Lamina	
C-2525		2010-02	BARBACOA BG6-05 I		2	Fagor Industrial S.Coop. FAGOR Oñate

MOD.	BARBACOA	ZONA	CONJUNTO FUNCIONAL / FUNCTIONAL UNIT	PLANO	C-2525

ITEM	CODIGO	DENOMINACION	TEXTO	BG6-05 I							
1	T035702000	QUEMADOR BG6-05	COMPLETE BURNER BG6-05	1							
	Q012031000	TORNILLO EXAGONAL M5X10 A.304	HEXAGONAL BOLT M5X10 A.304	2							
	Q302022000	ARANDELA 16X6X1.2 A.304	WASHER 16X6X1.2 A.304	2							
2	U052402000	TOBERA DE Ø 1,30 B.P.	NOZZLE Ø 1,30 B.P.	1							
2	U912401000	TOBERA DE Ø 1,95 G.N.	NOZZLE Ø 1,85 G.N.	1							
3	U915014000	PORTATOBERAS HORNO	NOZZLE	1							
	Q223019000	TUERCA 3/8 GAS LATÓN	NUT 3/8 GAS BRASS	1							
	Q301323000	ARANDELA Ø25X17X6	WASHER Ø25X17X6	1							
4	R20210000	PILOTO COMPLETO	COMPLETE PILOT LIGHT	1							
	Q012031000	TORNILLO EXAGONAL M5X10 A.304	HEXAGONAL BOLT M5X10 A.304	2							
	U442137000	INYECTOR Ø 0.4 GN	INJECTOR Ø 0.4 GN.	1							
5	X022131000	BUJIA	SPARK PLUG	1							
S/Nº	R613030000	CABLE BUJIA	SPARK PLUG CABLE	1							
S/Nº	U333003000	CABLE MASA ENCENDEDOR	LIGHTER EARTH CABLE	1							ELIMINADO 02.05.12
6	J225006000	TUBO PILOTO BG SNACK	PILOT PIPE BG SNACK	1							
S/Nº	U134323000	RACORD BICONO 6 958.031	BICONE CONNECTION 6 958.031	2							
7	S113034000	PIEZOELECTRICO	PIEZOELECTRIC	1							ELIMINADO 02.05.12
7	12043897	PIEZOELECTRICO COMPLETO	COMPLETE PIEZOELECTRIC	1							INTRODUCIDO 02.05.12
S/Nº	12043907	ANILLO ADAPTADOR	ADAPTER RING	1							INTRODUCIDO 02.05.12
8	H122103000	GRIFO 18700 BY-PASS 1,1	TAP 18700 BY-PASS 1,1	1							
9	H122101000	BOTON DE MANDO Ø 8 G700	CONTROL BUTTON Ø 8 G700	1							
10	U912104000	BRIDA AMARRE GRIFO 1/2"	TAP FASTENING FLANGE 1/2"	1							
	Q122032000	TORNILLO ALLEN M.5x15	ALLEN HEAD SCREW M.5x15								
11	J225004000	CONDUCCION GENERAL BG620	GENERAL PIPING BG620	1							
	Q012031000	TORNILLO EXAGONAL M5X10 A.304	HEXAGONAL BOLT M5X10 A.304	4							
	Q302022000	ARANDELA Ø16X6X1.2 A.304	WASHER 16X6X1.2 A.304	4							
12	U222130000	TERMOPAR L=600	THERMOCOUPLE L=600	1							
13	J225008000	CONDUC. BURNER BG SNACK	BURNER PIPE BG SNACK	1							
14	U325707000	REGULADOR DE AIRE	AIR REGULATOR	1							
	Q012032000	TORNILLO EXAGONAL M5X15 A.304	HEXAGONAL BOLT M5X15 A.304	1							

MOD.	BARBACOA	ZONA	CONJUNTO FUNCIONAL / FUNCTIONAL UNIT	PLANO	C-2525

ITEM	CODIGO	DENOMINACION	TEXTO	BG6-05 I							
1	T035702000	QUEMADOR BG6-05	COMPLETE BURNER BG6-05	1							
	Q012031000	TORNILLO EXAGONAL M5X10 A.304	HEXAGONAL BOLT M5X10 A.304	2							
	Q302022000	ARANDELA 16X6X1.2 A.304	WASHER 16X6X1.2 A.304	2							
2	U052402000	TOBERA DE Ø 1,30 B.P.	NOZZLE Ø 1,30 B.P.	1							
2	U912401000	TOBERA DE Ø 1,95 G.N.	NOZZLE Ø 1,85 G.N.	1							
3	U915014000	PORTATOBERAS HORNO	NOZZLE	1							
	Q223019000	TUERCA 3/8 GAS LATÓN	NUT 3/8 GAS BRASS	1							
	Q301323000	ARANDELA Ø25X17X6	WASHER Ø25X17X6	1							
4	R20210000	PILOTO COMPLETO	COMPLETE PILOT LIGHT	1							
	Q012031000	TORNILLO EXAGONAL M5X10 A.304	HEXAGONAL BOLT M5X10 A.304	2							
	U442137000	INYECTOR Ø 0.4 GN	INJECTOR Ø 0.4 GN.	1							
5	X022131000	BUJIA	SPARK PLUG	1							
S/Nº	R613030000	CABLE BUJIA	SPARK PLUG CABLE	1							
S/Nº	U333003000	CABLE MASA ENCENDEDOR	LIGHTER EARTH CABLE	1							ELIMINADO 01.05.12
6	J225006000	TUBO PILOTO BG SNACK	PILOT PIPE BG SNACK	1							
S/Nº	U134323000	RACORD BICONO 6 958.031	BICONE CONNECTION 6 958.031	2							
7	S113034000	PIEZOELECTRICO	PIEZOELECTRIC	1							ELIMINADO 01.05.12
8	H122103000	GRIFO 18700 BY-PASS 1,1	TAP 18700 BY-PASS 1,1	1							
9	H122101000	BOTON DE MANDO Ø 8 G700	CONTROL BUTTON Ø 8 G700	1							
10	U912104000	BRIDA AMARRE GRIFO 1/2"	TAP FASTENING FLANGE 1/2"	1							
	Q122032000	TORNILLO ALLEN M.5x15	ALLEN HEAD SCREW M.5x15								
11	J225004000	CONDUCCION GENERAL BG620	GENERAL PIPING BG620	1							
	Q012031000	TORNILLO EXAGONAL M5X10 A.304	HEXAGONAL BOLT M5X10 A.304	4							
	Q302022000	ARANDELA Ø16X6X1.2 A.304	WASHER 16X6X1.2 A.304	4							
12	U222130000	TERMOPAR L=600	THERMOCOUPLE L=600	1							
13	J225008000	CONDUC. BURNER BG SNACK	BURNER PIPE BG SNACK	1							
14	U325707000	REGULADOR DE AIRE	AIR REGULATOR	1							
	Q012032000	TORNILLO EXAGONAL M5X15 A.304	HEXAGONAL BOLT M5X15 A.304	1							

MOD.	BARBACOA	ZONA	VARIOS / MISCELLANEOUS	PLANO	

ITEM	CODIGO	DENOMINACION	TEXTO	BG6-05 I							NOTAS
	J226501000	FOLLETO INSTRUCC. BG SNACK	INSTRUC. LEAFLET BG SNACK	1							
	T056502000	CARBON VOLCANICO (BOLSA)	VOLCANIC ROCK CHARCOAL	1							

MOD.	BARBACOA	ZONA	REPUESTOS RECOMENDADOS RECOMMENDED SPARE PART	PLANO	

ITEM	CODIGO	DENOMINACION	TEXTO	BG6-05 I							
4	R20210000	PILOTO COMPLETO	COMPLETE PILOT LIGHT	1							C-2525
	U442137000	INYECTOR Ø 0.4 GN	INJECTOR Ø 0.4 GN.	1							C-2525
5	X022131000	BUJIA	SPARK PLUG	1							C-2525
S/Nº	R613030000	CABLE BUJIA	SPARK PLUG CABLE	1							C-2525
S/Nº	U333003000	CABLE MASA ENCENDEDOR	LIGHTER EARTH CABLE	1							C-2525
7	12043897	PIEZOELECTRICO COMPLETO	COMPLETE PIEZOELECTRIC	1							C-2525
S/Nº	12043907	ANILLO ADAPTADOR	ADAPTER RING	1							C-2525
8	H122103000	GRIFO 18700 BY-PASS 1,1	TAP 18700 BY-PASS 1,1	1							C-2525
12	U222130000	TERMOPAR L=600	THERMOCOUPLE L=600	1							C-2525