MESAS PASTELERAS CONCEPT / TABLES PASTRY CONCEPT

CMPP-150 / CMPP-150-C / CMPN-150

CMPP-202 / CMPP-202-C / CMPN-202

CMPP-255 / CMPP-255-C / CMPN-255

CMPP-307

Versión 2014-10

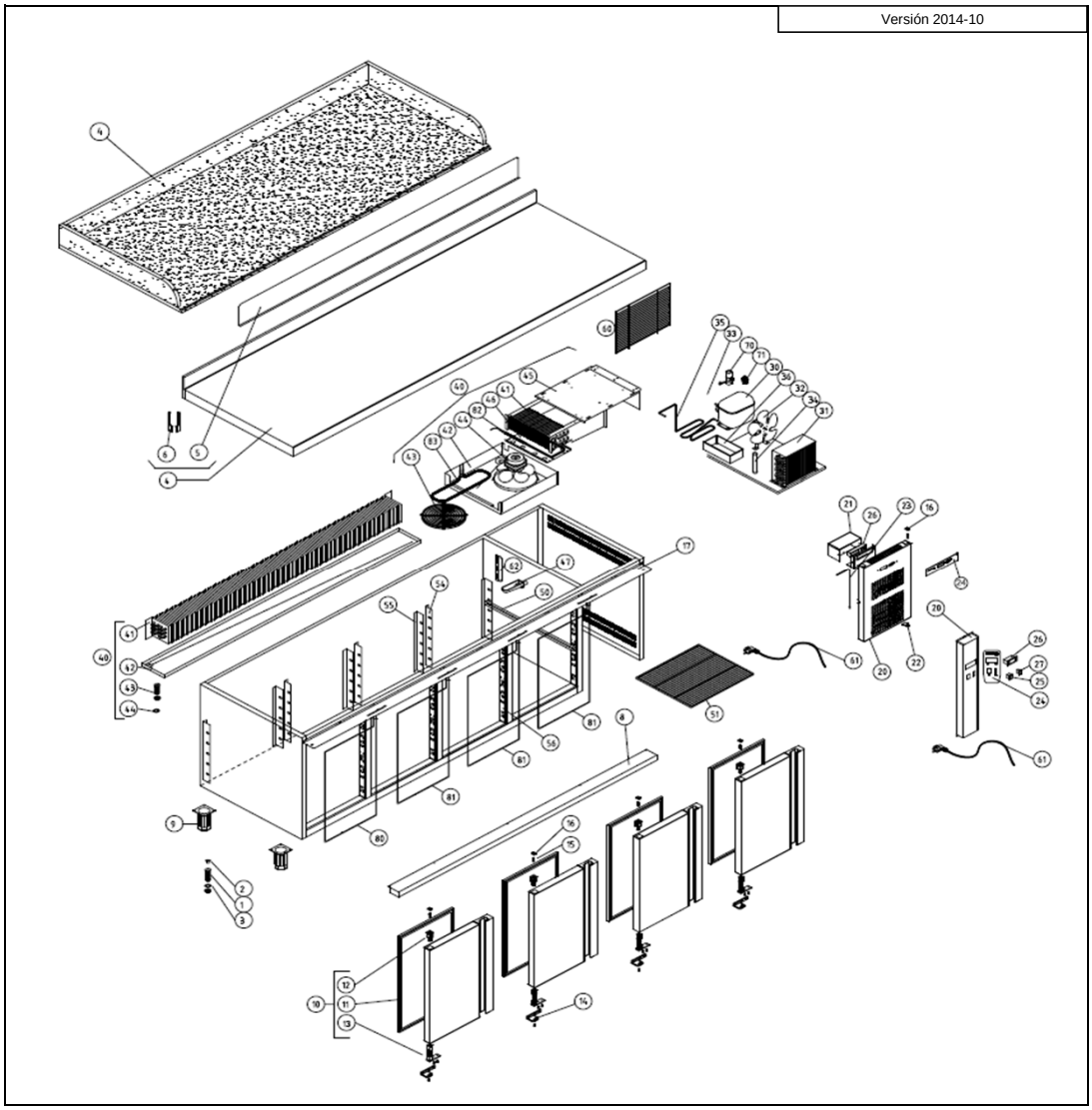

MESAS PASTELERAS CONCEPT / TABLES PASTRY CONCEPT

CMPP-117-R / CMPN-117-R

CMPP-169-R / CMPN-169-R

CMPP-222-R / CMPN-222-R

Versión 2014-10

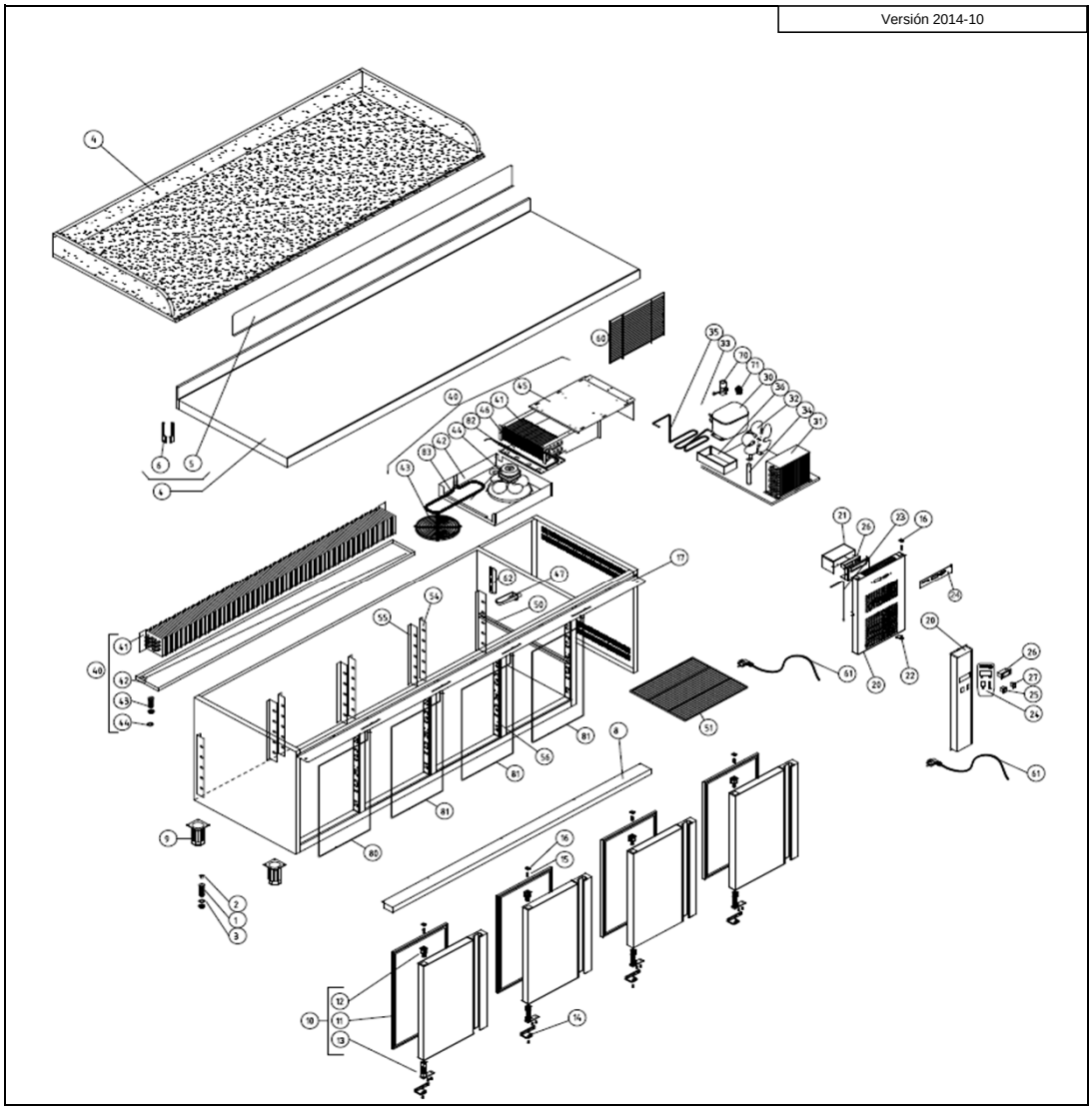

MESAS PASTELERAS CONCEPT / TABLES PASTRY CONCEPT

CMPP-150 / CMPP-150-C / CMPN-150

CMPP-202 / CMPP-202-C / CMPN-202

CMPP-255 / CMPP-255-C / CMPN-255

CMPP-307

Versión 2014-10

Nº	CODE CÓDIGO	RECOM.	DESCRIPCIÓN	DESCRIPTION	CMPP-150	CMPP-202	CMPP-255	CMPP-307	CMPP-150-C	CMPP-202-C	CMPP-255-C	CMPN-150	CMPN-202	CMPN-255
1	12037489		DESAG COMPL 3/4 GRIS+TUERCA	COMPLETE DRAINAGE 3/4 GREY + NUT	1	1	1	1	1	1	1	1	1	1
2	12037989		TAPON DESAGÜE DE 3/4 CIEGO	3/4 BLIND LIP DRAINAGE	1	1	1	1	1	1	1	1	1	1
3	12037891		JUNTA GOMA DESAGÜE 3/4	3/4 DRAINAGE JOINT RUBBER	1	1	1	1	1	1	1	1	1	1
4	12085735		ENCIM.MPP-150 PETO	MPP-150 TOP WITH SPLASH BACK	1							1		
4	12027290		ENCIM.MPP-202 PETO	MPP-202 TOP WITH SPLASH BACK		1							1	
4	12026924		ENCIM.MPP-250 PETO	MPP-250 TOP WITH SPLASH BACK			1							1
4	12026688		ENCIM.MPP-307 PETO	MPP-307 TOP WITH SPLASH BACK				1						
4	12085761		ENCIM.MPP-150	MPP-150 TOP					1					
4	12085792		ENCIM.MPP-202	MPP-202 TOP						1				
4	12085763		ENCIM.MPP-250	MPP-250 TOP							1			
4	12026303		ENC.MARM.PETO MMZ150 GAM.NUEV	MMZ-150 TOP GRANITE										
4	12026309		ENCIM.MARM.PETO MMZ-202 2006	MMZ-202 TOP GRANITE										
4	12113770		ENC. MARMOL CON PETO MPP-250	MPP-250 TOP GRANITE										
5	12074344		PROT.TRAS.ENC.MSP-150	MSP-150 TOP BACK PROTECTOR	1							1		
5	12074345		PROT.TRAS.ENC.MSP-200	MSP-200 TOP BACK PROTECTOR		1	1	1					1	1
6	12036012		JUEGO TAPETAS ENCIM.ZAMAK	TOP ZAMAK SET	1	1	1	1				1	1	1
7	12074346		SUP. PROT. TRAS. ENC. MSP	MSP TOP BACK UPPER PROTECTOR			1							1
5	12074347		PROT.TRAS.ENC.MSP-300-274	MSP-300-274 TOP BACK PROTECTOR				1						
9	12033566		PATA REGULAB ARM GASTRO	GASTRO CABINET ADJUSTABLE LEG	4	4	6	6	4	4	6	4	4	6
10	12043342		PUE MSP/MSN AP. IZDA CONCEPT	CONCEPT LEFT OPEN MSP/MSN DOOR	2	3	4	5	2	3	4	2	3	4
11	12035412		BURLETE PUERTA MSP	MSP GASKET DOOR	2	3	4	5	4	6	8	2	3	4
12	12037723		CAJA ALOJAMIENTO MUELLE GRIS	GREY SPRING HOUSING BOX	2	3	4	5	4	6	8	2	3	4
13	12038130		BIS.TRS1D DOBL MUELLE DV-2608	DOUBLE SPRING HINGE TRS1D DV-2608	2	3	4	5	4	6	8	2	3	4
14	12036986		SOP.BISAG.INF.IZD.	LEFT LOW HINGE SUPPORT	2	3	4	5	2	3	4	2	3	4
15	12037138		EJE ROSCA EXT.30X10INOX MESAS	COUNTERS EXTERIOR THREAD AXIS 30X10STAINLESS	3	4	5	6	6	8	10	3	4	5

16	12050272		TUERC.RAPIDA TRT M6-2	FAST NUT TRT M6-2	2	3	4	5	6	8	10	3	4	5
17	12033966		SOPOR.SUP.PUERTAS MSP-150	MSP-150 DOOR UPPER SUPPORT	1				1			1		
17	12033254		SOP.SUP.PUER.MSP20-25-30	MSP20-25-30 DOOR UPPER SUPPORT		1		1		1	1		1	
17	12035853		SOP.SUP.PUERT.MSP-250	MSP-250 DOOR UPPER SUPPORT			1							1
18	12034882		SOPORT.SUP.PUERTAS MSP-300	MSP-300 DOOR UPPER SUPPORT				1						
18	12035853		SOP.SUP.PUERT.MSP-250	MSP-250 DOOR UPPER SUPPORT							2			
18	12073961		SOPOR.SUP.PUERTAS MSP-150 GI	MSP-150 GI DOOR UPPER SUPPORT					1					
18	12073962		SOPOR.SUP.PUERTAS MSP-200 GI	MSP-200 GI DOOR UPPER SUPPORT						1	1			
20	12111098		REJILLA GRUPO MESAS FAGOR CONCEPT	FAGOR CONCEPT COUNTERS CONTROL PANEL	1	1	1	1	1	1	1	1	1	1
21	12074402		PROTECCION POWER COMPACT MESAS	COUNTERS POWER COMPACT PROTECTOR	1	1	1	1	1	1	1	1	1	1
22	12037372		SOPORTE ZAMAK GIRO REJILLA	CONTROL PANEL ZAMAK SUPPORT	1	1	1	1	2	2	2	1	1	1
24	12104752		ADHESIVO G. CONCEPT PWC	PWC CONCEPT RANGE STICKER	1	1	1	1	1	1	1	1	1	1
25	12047553		INT. BIP. O/I NEGRO/ROJO	O/I BLACK/RED BIPOLAR SWITCH	1	1	1	1	1	1	1	1	1	1
26	12043611		TERMOSTATO POWER COMPAC REFRIG	REFRIGERATION POWER COMPACT THERMOSTAT	1	1	1	1	1	1	1			
26	12040693		TERMOSTATO POWER COMPAC CONG.	FREEZER POWER COMPACT THERMOSTAT								1	1	1
30	12048631		COMPR.FR-7,5-G R134A	COMPR.FR-7,5-G R134A	1				1					
30	12028976		COMPR.FR-8.5-G R134A	COMPR.FR-8.5-G R134A		1				1				
30	12046754		COMP.NEK6210Z EMBRACO	COMP.NEK6210Z EMBRACO			1	1			1			
30	12028143		COMPR.SC-12-CL R404A	COMPR.SC-12-CL R404A								1		
30	12027322		COMPR.SC-15-CL R404A	COMPR.SC-15-CL R404A									1	1
31	12032903		CONDENSADOR 9x2	9X2 CONDENSER	1	1			1	1				
31	12032340		CONDENSADOR 9x3 FAGC0021	FAGC0021 9X3 CONDENSER			1	1			1			
31	12031472		CONDENSADOR 10X4 NEUTRO	NEUTRAL 10X4 CONDENSER								1		
31	12031310		CONDENSADOR 10x4 TECHO	CEILING 10X4 CONDENSER									1	
31	12068194		CONDENSADOR 11x4 D270A4S BAFLE	D270A4S BAFLE 11X4 CONDENSER										1
32	12033477		VENTILADOR 10W PATA PALA 220V	10W 220V MOTOR WITH LEG AND FAN	1	1	1	1	1	1	1	1	1	2
33	12037369		VALVULA OBUS COMPLETA RF.HB-1S	OBUS VALVE RF.HB-1S	1	1	1	1	1	1	1	1	1	1
34	12036970		FILTRO DESHIDRAT.40GR 1/4X1/4	DEHYDRATOR FILTER 40G 1/4X1/4	1	1	1	1	1	1	1	1	1	1
35	12072918		EVAP.AUT.MESAS CONCEPT	CONCEPT COUNTER AUTOMATIC EVAPORATION	1	1	1	1	1	1	1	1	1	1
36	12036623		BANDEJA EVAPORACION AUTOMÁTICA	AUTOMATIC EVAPORATION PAN	1	1	1	1	1	1	1	1	1	1
40	12085337		UD.EVAP.MPP-150 ESTATICO	MPP-150 EVAPORATION UNIT ESTATIC	1									
40	12085338		UD.EVAPORAT.MPP-200 ESTATICO	MPP-200 EVAPORATION UNIT ESTATIC		1								
40	12085339		UD.EVAPORAT.MPP-250 ESTATICO	MPP-250 EVAPORATION UNIT ESTATIC			1							
40	12085340		UD.EVAPORAT.MPP-300 ESTATICO	MPP-300 EVAPORATION UNIT ESTATIC				1						
40	12085341		UD.EVAPORAT.MPP-150-C ESTATICO	MPP-150-C EVAPORATION UNIT ESTATIC					1					
40	12085342		UD.EVAPORAT.MPP-200-C ESTATICO	MPP-200-C EVAPORATION UNIT ESTATIC						1				
40	12085343		UD.EVAPORAT.MPP-250-C ESTATICO	MPP-250-C EVAPORATION UNIT ESTATIC							1			
40	12085355		UD.EV. MSN150,200,135,180 COMP	MSN150,200,135,180 EVAPORATION UNIT								1	1	
40	12085398		UD.EV. MSN/MPN-250,300	MSN/MPN-250,300 EVAPORATION UNIT										1
41	12031869		EV.ESTATICO V4T4R700A10S PINT	EV.ESTATIC V4T4R700A10S PINT	1				1					
41	12028352		EV.ESTATICO V4T3R1200A10PINT.	EV.ESTATIC V4T3R1200A10PINT.		1				1				
41	12030471		EV.ESTATICO V4T3R1700A10PINT.	EV.ESTATIC V4T3R1700A10PINT.			1				1			
41	12030024		EV.ESTATICO V4T3R220A10SPINT.	EV.ESTATIC V4T3R220A10SPINT.				1						
41	12044662		BAT.6T4R300A6S PINTADO.MESAS	COUNTERS PAINTED 6T4R300A6S EVAPORATOR								1	1	
41	12045174		EV. FC71B RH, 7T4R295A6S PINT.	EV. FC71B RH, 7T4R295A6S PINT.										1

42	12035501		BANDEJA GOTEO 150	DRIP TRAY 150	1										
42	12035045		BANDEJA GOTEO 200	DRIP TRAY 200		1									
42	12034639		BANDEJA GOTEO 250	DRIP TRAY 250			1								
42	12033707		BANDEJA DE GOTEO 300	DRIP TRAY 300				1							
42	12035447		BANDEJA DE GOTEO CENTRAL 150	DRIP TRAY 150 CENTRAL					1						
42	12034988		BANDEJA DE GOTEO CENTRAL 200	DRIP TRAY 200 CENTRAL						1					
42	12034582		BANDEJA DE GOTEO CENTRAL 250	DRIP TRAY 250 CENTRAL							1				
42	12040457		SUJ.VENTIL.MSP-150,200 COMPACT	COMPACT MSP-150,200 FAN SUPPORT								1	1		
43	12037616		DESAGÜE SAN MIGUEL+TUERCA	SAN MIGUEL+DRAIN NUT	1	1	1	1	1	1	1				
43	12034663		REJILLA VENT.D.246 PINTADA	PAINTED D246MM FAN GRID								1	1	1	
44	12038248		JUNTA GOMA DESAGÜE 1/2	RUBBER GASKET DRAIN 1/2	1	1	1	1	1	1	1				
44	12034545		VENTIL.EVAPOR.5W S/ARO S/PATAS	5W EVAPORATOR FAN MOTOR WO RING WO LEGS								1	1	1	
45	12074526		SOP.EVAP.MESAS EVAP.COMPACTO	COUNTERS COMPACT EVAPORATOR SUPPORT								1	1		
46	12074525		CUBRER.BAT.6T4R300A6S EVAP.COM	6T4R300A6S COMPACT EVAPORATOR COVER								1	1		
47	12037314		CANALIZ AGUA 150 NEGRO CONG	FREEZER BLACK 150 WATER DRAINAGE								1	1	1	
50	12036419		GUIA PASTELERA EN L 649mm	GUIDE PASTRY L 649 mm	8	12	16	20				8	12	16	
50	12038109		GUIA PAST.CENTRAL EN L 711mm	GUIDE PAST. CENTRAL L 711 mm					8	12	16				
51	12034886		PARRILLA PASTEL.600X400 EPOXI	GRILL PAST. 600x400 EPOXI	2	3	4	5	2	3	4	2	3	4	
54	12037101		CREM.RESP.IZD.ESTAT.MPP	CREM.RESP.IZD.ESTAT.MPP	2	3	4	5							
54	12036814		CREM.RESP.IZDA.T.FORZ.MPP	CREM.RESP.IZDA.T.FORZ.MPP								2	3	4	
55	12037027		CREM.RES.DCH.ESTAT.MPP	CREM.RES.DCH.ESTAT.MPP	2	3	4	5							
55	12037401		CREM.RESP.DCHA.T.FORZ.MPP	CREM.RESP.DCHA.T.FORZ.MPP								2	3	4	
56	12037116		CREM. MARC. MAGNETICO MSP-MFP	CREM. MARC. MAGNETICO MSP-MFP	4	6	8	10	8	12	16	4	6	8	
60	12036793		REJ.RESP.GRUPO 387X280POLICARB	POLICARBONATE 387X280 COLD UNIT BACK GRID	1	1	1	1				1	1	1	
61	12036805		MANG 3X1X2500 BL. SCHUKO 3T	3X1X2500 WHITE SCHUKO 3T HOSE	1	1	1	1	1	1	1				
61	12036517		MANG 3X1.5X2500 BL.SCHUKO 3T	3X1.5X2500 WHITE SCHUKO 3T HOSE								1	1	1	
62	12073847		PROTECT SONDA MF GRAVEDAD	PROTECT SONDA MF GRAVEDAD	1	1	1	1	1	1	1				
62	12073795		PROT SONDA 175x49	175X49 PROBE PROTECTOR								1	1	1	
70	12033454		CONDEN.ARRANQUE FR-117U5015 80 mF	FR-117U50515 80 Mf START CAPACITOR	1	1			1	1		1	1	1	
70	12040120		CONDENSADOR COMP. NEK 6210Z	NEK 6210Z COMPRESSOR CONDENSER			1	1			1				
71	12019535		RELE ARRANQ COMPR.FR-7.5G 6001	COMPRESSOR-7.5G 6001 STARTER RELAY	1				1						
71	12034947		RELE ARRANQUE COMPRESOR FR-8,5G 2	COMPRESSOR-8.5G 2 STARTER RELAY		1				1					
71	12036939		RELE ARRAN. COMP. NEK 6210Z	COMPRESSOR NEK 6210Z STARTER RELAY			1	1			1				
71	12035096		RELE ARRANQ COMPR.SC-12CL 6005	COMPRESSOR SC-12CL 6005 STARTER RELAY								1	1		
71	12034983		RELE ARRANQ COMPR.SC-15CL 6019	COMPRESSOR SC-15CL 6019 STARTER RELAY										1	
80	12036344		RESIST.MARCO SNACK-1, 21W	21W SNACK 1 FRAME HEATER								1	1	1	
81	12036157		RESIST.MARCO SNACK-2, 21W	21W SNACK 2 FRAME HEATER								1	2	3	
82	12034637		RESIST.BLIND.FC61-71 350W 1000	FC61-71 350W 1000 HEATER								1	1		
82	12045816		RESIST.BLIND. 350W 220V	RESIST.BLIND. 350W 220V										1	
83	12035911		RESIST.BANDEJA DEPART.18W	RESIST.BANDEJA DEPART.18W								1	1	1	
90	12085170		PUE MSP/MSN AP.DCH CONCEPT	DOOR MSP/MSN AP. DCH CONCEPT					2	3	4				
91	12037017		SOP.BISAG.INF.DCHA.	SOP.BISAG.INF.DCHA.					2	3	4				

Notes:

MESAS PASTELERAS CONCEPT / TABLES PASTRY CONCEPT

FAGOR

CMPP-117-R / CMPN-117-R

CMPP-169-R / CMPN-169-R

CMPP-222-R / CMPN-222-R

Versión 2014-10

Nº	CODE CÓDIGO	RECOM.	DESCRIPCIÓN	DESCRIPTION	CMPP-117-R	CMPP-169-R	CMPP-222-R	CMPN-117-R	CMPN-169-R	CMPN-222-R
1	12037489		DESAG COMPL 3/4 GRIS+TUERCA	COMPLETE DRAINAGE 3/4 GREY + NUT	1	1	1	1	1	1
2	12037989		TAPON DESAGÜE DE 3/4 CIEGO	3/4 BLIND LIP DRAINAGE	1	1	1	1	1	1
3	12037891		JUNTA GOMA DESAGÜE 3/4	3/4 DRAINAGE JOINT RUBBER	1	1	1	1	1	1
4	12085825		ENCIM.MPP-117PETO	MPP-117 TOP WITH SPLASH BACK	1			1		
4	12027482		ENCIM.MPP-169 PETO	MPP-169 TOP WITH SPLASH BACK		1			1	
4	12085808		ENCIM.MPP-222 PETO	MPP-222 TOP WITH SPLASH BACK			1			1
5	12074348		PROT.TRAS.ENC.MSP-117	MSP-117 TOP BACK PROTECTOR	1			1		
5	12074349		PROT.TRAS.ENC.MSP-169	MSP-169 TOP BACK PROTECTOR		1	1		1	1
6	12036012		JUEGO TAPETAS ENCIM.ZAMAK	TOP ZAMAK SET	1	1	1	1	1	1
5	12074347		PROT.TRAS.ENC.MSP-300-274	MSP-300-274 TOP BACK PROTECTOR			1			1
9	12033566		PATA REGULAB ARM GASTRO	GASTRO CABINET ADJUSTABLE LEG	4	4	6	4	4	6
10	12043342		PUE MSP/MSN AP. IZDA CONCEPT	CONCEPT LEFT OPEN MSP/MSN DOOR	2	3	4	2	3	4
11	12035412		BURLETE PUERTA MSP	MSP GASKET DOOR	2	3	4	2	3	4
12	12037723		CAJA ALOJAMIENTO MUELLE GRIS	GREY SPRING HOUSING BOX	2	3	4	2	3	4
13	12038130		BIS.TRS1D DOBL MUELLE DV-2608	DOUBLE SPRING HINGE TRS1D DV-2608	2	3	4	2	3	4
14	12036986		SOP.BISAG.INF.IZD.	LEFT LOW HINGE SUPPORT	2	3	4	2	3	4
15	12037138		EJE ROSCA EXT.30X10INOX MESAS	COUNTERS EXTERIOR THREAD AXIS 30X10STAINLESS	2	3	4	2	3	4
16	12050272		TUERC.RAPIDA TRT M6-2	FAST NUT TRT M6-2	2	3	4	2	3	4
17	12034827		SOPOR.SUP.PUERTAS MSP-117	MSP-117 DOOR UPPER SUPPORT	1			1		
17	12033641		SOPOR.SUP.PUERTAS MSP-169	MSP-169 DOOR UPPER SUPPORT		1			1	
17	12035903		SOPOR.SUP.PUERTAS MSP-222	MSP-222 DOOR UPPER SUPPORT			1			1
20	12047552		CUADRO MANDOS REMOTO CONCEPT	REMOTE CONCEPT CONTROL PANEL	1	1	1	1	1	1

24	12113735		ADHESIVO G. CONCEPT REMOTA	REMOTE CONCEPT STICKER	1	1	1	1	1	1
25	12047553		INT. BIP. O/I NEGRO/ROJO	O/I BLACK/RED BIPOLAR SWITCH	1	1	1	1	1	1
26	12084202		CONJ.TERM.REFR.220V50HZ+1 SOND	REFRIGERATION THERMOSTAT SET 220V50HZ + 1 PROBE	1	1	1			
26	12045485		CONJ.TERM.CONG.220V50HZ+2 SOND	FREEZER THERMOSTAT SET 220V50HZ + 2 PROBES				1	1	1
27	12047554		PILOTO RECTANGULAR ROJO LUZ	SQUARED RED LIGHT SWITCH	1	1	1	1	1	1
40	12085367		UD. EVAP. MPP-117-R ESTATICO	MPP-117-R EVAPORATION UNIT ESTATIC	1					
40	12085369		UD. EVAP. MPP-169-R ESTATICO	MPP-169-R EVAPORATION UNIT ESTATIC		1				
40	12085370		UD. EVAP. MPP-222-R ESTATICO	MPP-222-R EVAPORATION UNIT ESTATIC			1			
40	12085398		UD.EV. MSN/MPN-250,300	MSN/MPN-250,300 EVAPORATION UNIT						1
40	12085360		UD.EV.MSN-117,102,169-R COMPAC	MSN-117,102,169-R EVAPORATION UNIT				1	1	
41	12031869		EV.ESTATICO V4T4R700A10S PINT	EV.ESTATIC V4T4R700A10S PINT	1					
41	12028352		EV.ESTATICO V4T3R1200A10PINT.	EV.ESTATIC V4T3R1200A10PINT.		1				
41	12030471		EV.ESTATICO V4T3R1700A10PINT.	EV.ESTATIC V4T3R1700A10PINT.			1			
41	12044662		BAT.6T4R300A6S PINTADO.MESAS	COUNTERS PAINTED 6T4R300A6S EVAPORATOR				1	1	
41	12045174		EV. FC71B RH, 7T4R295A6S PINT.	EV. FC71B RH, 7T4R295A6S PINT.						1
42	12035501		BANDEJA GOTEO 150	DRIP TRAY 150	1					
42	12035045		BANDEJA GOTEO 200	DRIP TRAY 200		1				
42	12034639		BANDEJA GOTEO 250	DRIP TRAY 250			1			
42	12040457		SUJ.VENTIL.MSP-150,200 COMPACT	COMPACT MSP-150,200 FAN SUPPORT				1	1	
43	12037616		DESAGÜE SAN MIGUEL+TUERCA	SAN MIGUEL+DRAIN NUT	1	1	1			
43	12034663		REJILLA VENT.D.246 PINTADA	PAINTED D246MM FAN GRID				1	1	1
44	12038248		JUNTA GOMA DESAGÜE 1/2	RUBBER GASKET DRAIN 1/2	1	1	1			
44	12034545		VENTIL.EVAPOR.5W S/ARO S/PATAS	5W EVAPORATOR FAN MOTOR WO RING WO LEGS				1	1	1
45	12074526		SOP.EVAP.MESAS EVAP.COMPACTO	COUNTERS COMPACT EVAPORATOR SUPPORT				1	1	
46	12074525		CUBRER.BAT.6T4R300A6S EVAP.COM	6T4R300A6S COMPACT EVAPORATOR COVER				1	1	
47	12037314		CANALIZ AGUA 150 NEGRO CONG	FREEZER BLACK 150 WATER DRAINAGE				1	1	1
50	12036419		GUIA PASTELERA EN L 649mm	GUIDE PASTRY L 649 mm	8	12	16	8	12	16
51	12034886		PARRILLA PASTEL.600X400 EPOXI	GRILL PAST. 600x400 EPOXI	2	3	4	2	3	4
54	12037101		CREM.RESP.IZD.ESTAT.MPP	CREM.RESP.IZD.ESTAT.MPP	2	3	4			
54	12036814		CREM.RESP.IZDA.T.FORZ.MPP	CREM.RESP.IZDA.T.FORZ.MPP				2	3	4
55	12037027		CREM.RES.DCH.ESTAT.MPP	CREM.RES.DCH.ESTAT.MPP	2	3	4			
55	12037401		CREM.RESP.DCHA.T.FORZ.MPP	CREM.RESP.DCHA.T.FORZ.MPP				2	3	4
56	12037116		CREM. MARC. MAGNETICO MSP-MFP	CREM. MARC. MAGNETICO MSP-MFP	4	6	8	4	6	8
61	12036805		MANG 3X1X2500 BL. SCHUKO 3T	3X1X2500 WHITE SCHUKO 3T HOSE	1	1	1			
61	12036517		MANG 3X1.5X2500 BL.SCHUKO 3T	3X1.5X2500 WHITE SCHUKO 3T HOSE				1	1	1
62	12073847		PROTECT SONDA MF GRAVEDAD	PROTECT SONDA MF GRAVEDAD	1	1	1			
62	12073795		PROT SONDA 175x49	175X49 PROBE PROTECTOR				1	1	1
80	12036344		RESIST.MARCO SNACK-1, 21W	21W SNACK 1 FRAME HEATER				1	1	1
81	12036157		RESIST.MARCO SNACK-2, 21W	21W SNACK 2 FRAME HEATER				1	2	3

82	12034637		RESIST.BLIND.FC61-71 350W 1000	FC61-71 350W 1000 HEATER				1	1	
82	12045816		RESIST.BLIND. 350W 220V	RESIST.BLIND. 350W 220V						1
83	12035911		RESIST.BANDEJA DEPART.18W	RESIST.BANDEJA DEPART.18W				1	1	1

Notes: