DESPIECE TECNICO

Barbacoa a gas
Gas charcoal grills
Charcoal á gaz
Gas lavastein grills
Griglie pietra lavica a gas
Grelhadores de pedra lávica

GAMA 900

Modelos:

BG9-05 PLUS
BG9-10 PLUS

Noviembre 2011 November
Revisado Junio 2013 June Revised

FAGOR

FAGOR INDUSTRIAL

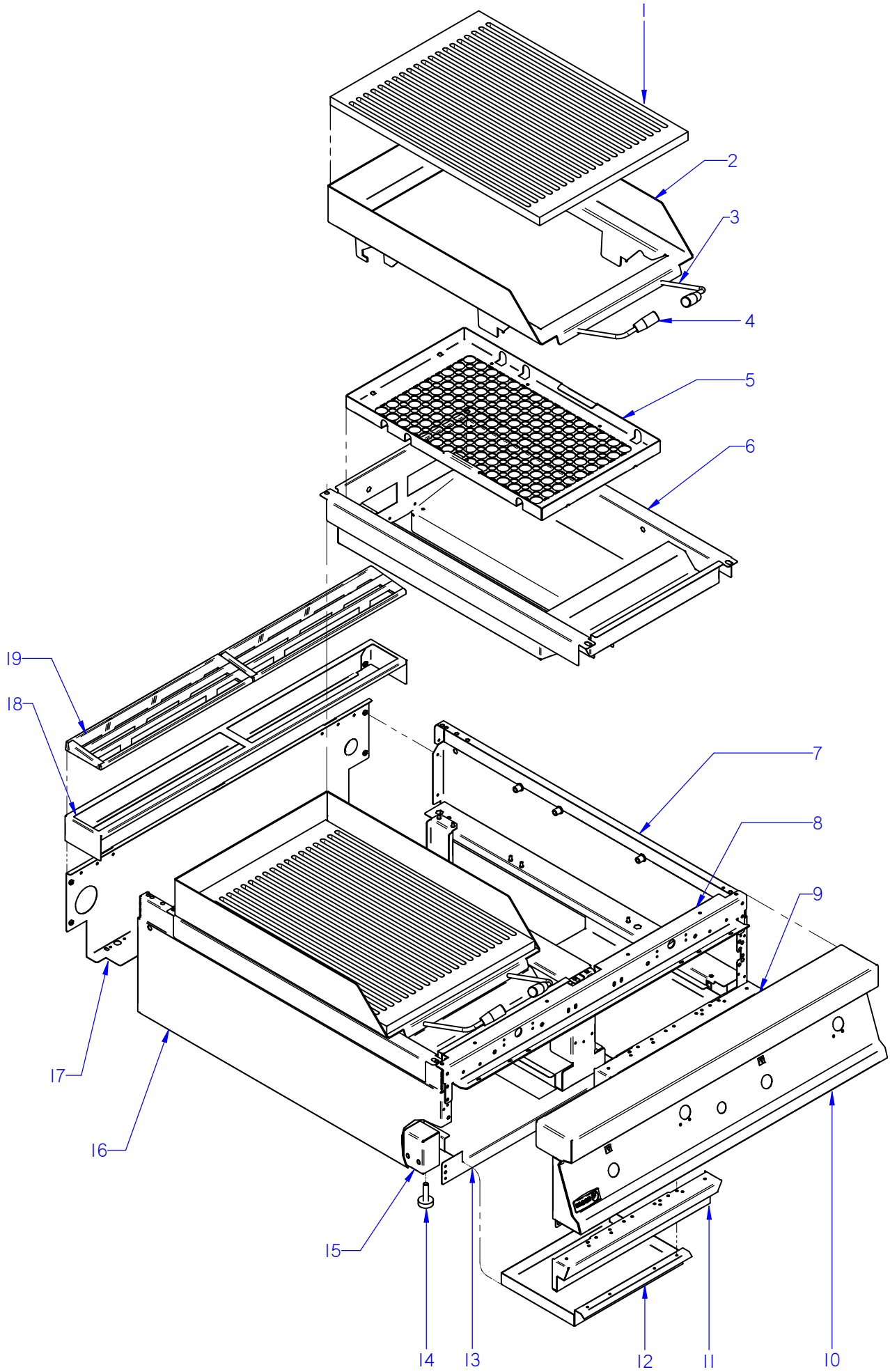

ITEM MARCADO EN COLOR = REPUESTO RECOMENDADO
COLOURED ITEM = RECOMMENDED SPARE PART

Nº plano / N º plane	Firma	Fecha / Date	Denominación / Denomination: MUEBLE / FITTING	Lamina / Sheet	
C-2932		2011-10	BARBACOA BG9-05 / 9-10 PLUS	1	Fagor Industrial S.Coop. FAGOR Oñate

MOD.	BARBACOA / CHARCOAL GRILLS	ZONA / ZONE	MUEBLE / FITTING	PLANO DIAGRAM	C-2932

ITEM	CODIGO REFERENCE	DENOMINACION	DENOMINATION	BG9-05 PLUS	BG9-10 PLUS							ELIMINADO ELIMINATED	INTRODUCID. INTRODUCED	NOTAS
1	T055470000	PARRILLA INOXIDABLE G900	STAINLESS STEEL GRILLE G900	1	2									
2	H015408000	SOPORTE PARRILLA G900	GRILLE SUPPORT G900	1	2							02.04.12		
2	12044203	SOPORTE PARRILLA G900 MEK	GRILLE SUPPORT G900 MEK	1	2								02.04.12	
	Q162040000	TUERCA EXAGONAL M6	HEXAGONAL NUT M6	2	4									
	Q261040000	ARANDELA MUELLE A6	SPRING WASHER A6	2	4									
3	H125419000	ASA BARBACOA 900	BARBECUE HANDLE 900	2	4							02.04.12		
4	T065460000	EMPUÑADURA	HANDLE	2	4									
5	H015407000	REJILLA INOX G900	INOX GRILLE G900	1	2									
	H012617000	LATERAL REJILLA AD	GRILLE SIDE AD	2	4									
	Q419005000	REMACHE 4x8 ALMG3 / ALUMINIO	RIVET 4X8 ALMG3 / ALUMINIUM	6	12									
6	H015413000	CAJA INTERIOR BG9-05 AD	INTERIOR BOX BG9-05 AD	1	2									
	N100322000	COJINETE AUTOLUBRICADO	SELF LUBRICATED BEARING	6	12									
	Q221343000	REMACHE EXAGONAL M6	HEXAGONAL RIVET M6	6	12									
	Q012032000	TORNILLO EXAGONAL M5X15 A304	HEXAGONAL BOLT M5X15	4	8									
	Q242030000	ARANDELA ABANICO A5 A304	FAN WASHER A5 A304	2	4									
	H125418000	TORNILLO SIST. ELEVACION	SCREW SYSTEM. LIFT	6	12									
7	R062810000	PANEL LATERAL DERECHO G-900	RIGHT SIDE PANEL G-900	1	1									
	Q221342000	REMACHE EXAGONAL M5	HEXAGONAL RIVET M5	9	9									
	Q419005000	REMACHE 4x8 ALMG3 / ALUMINIO	RIVET 4X8 ALMG3 / ALUMINIUM	3	3									
	Q162030000	TUERCA EXAGONAL M5	HEXAGONAL NUT M5	1	1									
	Q242030000	ARANDELA ABANICO A5 A304	FAN WASHER A5 A304	1	1									
8	R042611000	ESCUA. AMARRE ANTER.1/2 M AD	FRONT FAS. BRACKET 1/2 M AD	1	_									
8	U042610000	ESCUAD. AMARRE ANTERI.1 M AD	FRONT FAST. BRACKET 1 M AD	_	1									
	Q221342000	REMACHE EXAGONAL M5	HEXAGONAL RIVET M5	4	4									
	Q012032000	TORNILLO EXAGONAL M5X15 A304	HEXAGONAL BOLT M5X15 A304	6	6									
9	U965415000	ANTERIOR DE MESA 1/2 M	FRONT BENCH 1/2 M	1	_							03.10.11		
9	12006768	ANTERIOR DE MESA 1/2M (AD)	FRONT BENCH 1/2M (AD)	1	_								03.10.11	
9	S105403000	ANTERIOR DE MESA 1 M	FRONT BENCH 1 M	_	1									
	Q152004000	TORN. APLASTADO M5x13 A304	HEXAGONAL FLAT SCREW M5x13	2	2									
	Q302022000	ARANDELA 16x6x1,2 A304	WASHER 16x6x1.2 A304	2	2									

MOD.	BARBACOA / CHARCOAL GRILLS	ZONA / ZONE	MUEBLE / FITTING	PLANO DIAGRAM	C-2932

ITEM	CODIGO REFERENCE	DENOMINACION	DENOMINATION	BG9-05 PLUS	BG9-10 PLUS							ELIMINADO ELIMINATED	INTRODUCID. INTRODUCED	NOTAS
10	H012829000	PORTAMANDOS BG9-05 AD	CONTROL HOLDER BG9-05 AD	1	_									
10	H022814000	PORTAMANDOS BG9-10 AD	CONTROL HOLDER BG9-10 AD	_	1									
	U022836000	ESCUDO FAGOR	FAGOR EMBLEM G700	1	1									
	Q221023000	CLIP SUJECIÓN RÁPIDA Ø5	RAPID CONNECT CLIP Ø5	2	2									
	Q152004000	TORNILLO APLASTADO M5x13	FLAT HEAD SCREW M5X13	4	4									
S/Nº	12044303	LAGRIMA	IGNITOR WINDON COVER	1	1								01,04,12	
S/Nº	12025252	MUELLE 07777	SPRING 07777	1	1								01,04,12	
11	H012821000	ASA BANDEJA IZQUIER. DERECHA	LEFT TRAY HANDLE RIGHT	1	2									
	Q419005000	REMACHE 4x8 ALMG3 / ALUMINIO	RIVET 4X8 ALMG3 / ALUMINIUM	2	4									
12	H012620000	CAJON RECOGEGRAS. BG9-05 AD	GREASE COLLECTION DRAWER	1	2									
S/Nº	H012621000	REFUERZO CAJON AD	DRAWER REINFORCEMENT AD	1	2									
13	H012619000	BASE BG9-05 COMPLETA AD	BASE BG9-05 COMPLETE AD	1	_									
13	H022812000	BASE BG9-10 COMPLETA AD	BASE BG9-10 COMPLETE AD	_	1									
14	Z200107000	PATA REGULABLE	ADJUSTABLE LEG	4	4									
	Q221345000	REMACHE EXAGONAL M10	HEXAGONAL RIVET M10	4	4									
15	U962627000	ESCUADRA AMARRE PATA AD	LEG FASTENING BRACKET AD	2	2									
	X010503000	CIERRE MUELLE	LOCK SPRING	2	2									
	Q419007000	REMACHE TUBULAR C/V Ø3,2x6	TUBULAR RIVET C/V Ø3.2X6	4	4									
	Q162030000	TUERCA EXAGONAL M5	HEXAGONAL NUT M5	4	4									
	Q262030000	ARANDELA GROW. A5 A304	WASHER GROW. A5 A.304	4	4									
16	R062811000	PANEL LATERA IZQUIERDO G-900	LEFT SIDE PANEL G-900	1	1									
	Q221342000	REMACHE EXAGONAL M5	HEXAGONAL RIVET M5	9	9									
	Q419005000	REMACHE 4x8 ALMG3 / ALUMINIO	RIVET 4X8 ALMG3 / ALUMINIUM	3	3									
	Q162030000	TUERCA EXAGONAL M5	HEXAGONAL NUT M5	1	1									
	Q242030000	ARANDELA ABANICO A5 A304	FAN WASHER A5 A304	1	1									
17	R042838000	PANEL POSTERIOR 0,5 M	REAR PANEL 0.5 M	1	_									
17	U042805000	PANEL POSTERIOR 1 M	REAR PANEL 1 M	_	1									
	Q419005000	REMACHE 4x8 ALMG3 / ALUMINIO	RIVET 4X8 ALMG3 / ALUMINIUM	4	4									
	X010503000	CIERRE MUELLE	LOCK SPRING	2	2									
	Q419005000	REMACHE 4X8 ALMG3 / ALUMINIO	RIVET 4X8 ALMG3 / ALUMINIUM	4	4									

MOD.	BARBACOA / CHARCOAL GRILLS	ZONA / ZONE	MUEBLE / FITTING	PLANO DIAGRAM	C-2932

ITEM	CODIGO REFERENCE	DENOMINACION	DENOMINATION	BG9-05 PLUS	BG9-10 PLUS							ELIMINADO ELIMINATED	INTRODUCID. INTRODUCED	NOTAS
18	R205438000	SOPORTE EMBELLECEDOR 1/2M	1/2M TRIM SUPPORT	1	_									
18	R205439000	SOPORTE EMBELLECEDOR 1M	TRIM SUPPORT 1M	_	1									
	Q419005000	REMACHE 4X8 ALMG3 / ALUMINIO	RIVET 4X8 ALMG3 / ALUMINIUM	2	4									
19	R205425000	EMBELLECEDOR ESMALTE	ENAMEL TRIM	1	2									

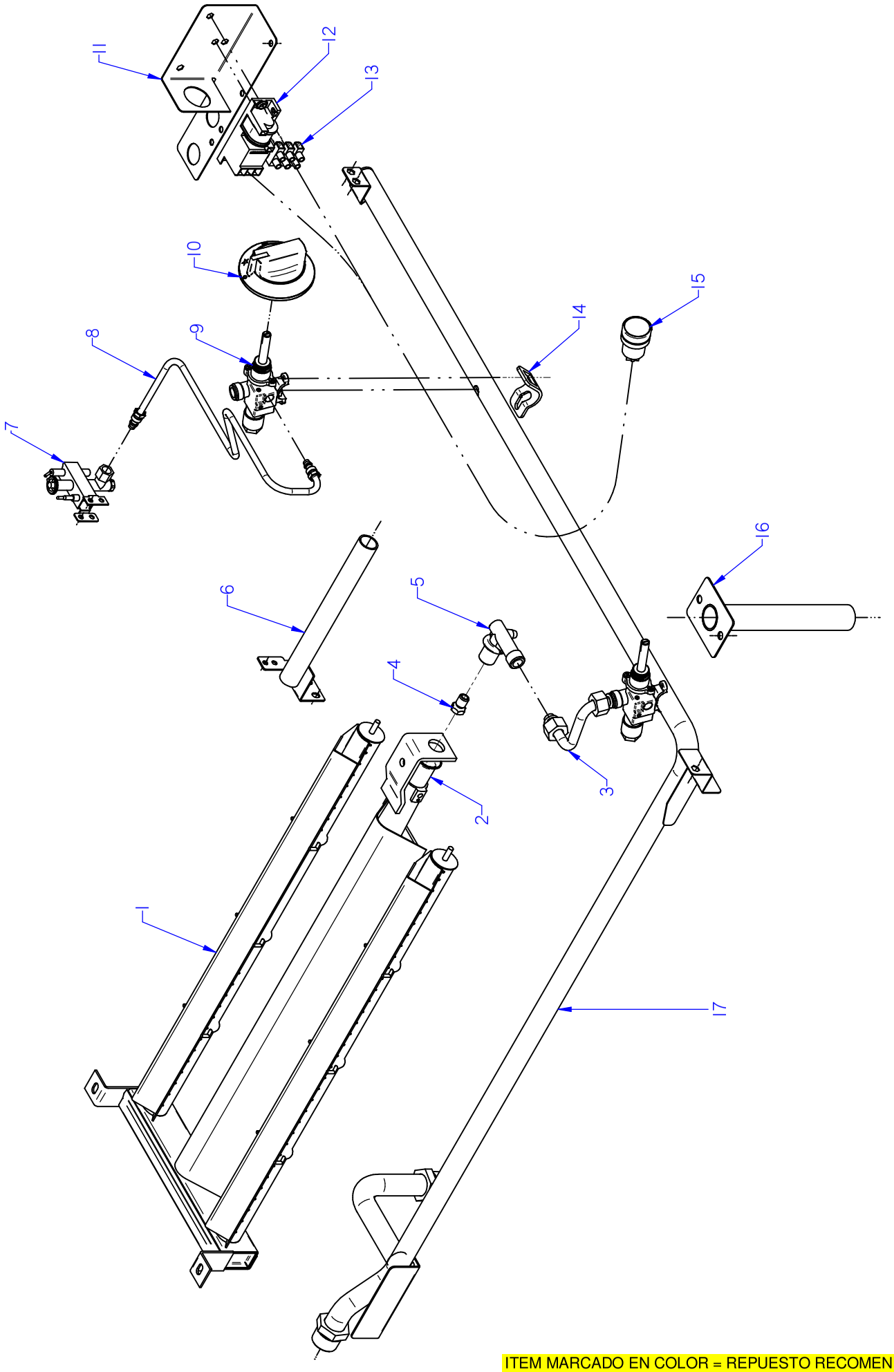

ITEM MARCADO EN COLOR = REPUESTO RECOMENDADO
COLOURED ITEM = RECOMMENDED SPARE PART

Nº plano / N º plane	Firma	Fecha / Date	Denominación / Denomination: PARTE FUNCIONAL / FUNCTIONAL PART	Lamina / Sheet	
C-2933		2011-10	BARBACOA BG9-05 / 9-10 PLUS	2	Fagor Industrial S.Coop. FAGOR Oñate

MOD.	BARBACOA / CHARCOAL GRILLS	ZONA / ZONE	PARTE FUNCIONAL / FUNCTIONAL PART	PLANO DIAGRAM	C-2933

ITEM	CODIGO REFERENCE	DENOMINACION	DENOMINATION	BG9-05 PLUS	BG9-10 PLUS							ELIMINADO ELIMINATED	INTRODUCID. INTRODUCED	NOTAS
1	T055703000	QUEMADOR BARBACOA	BARBECUE BURNER	1	2									
	Q162030000	TUERCA EXAGONAL M5	HEXAGONAL NUT M5	1	2									
	Q302022000	ARANDELA 16x6x1,2 A304	WASHER 16x6x1.2 A304	1	2									
2	U325707000	REGULADOR DE AIRE	AIR REGULATOR	1	2									
	Q012031000	TORNILLO EXAGONAL M5x10 A304	HEXAGONAL BOLT M5x10 A304	1	2									
3	H015030000	CONDUCCION A QUEMADOR COM.	COMP. BURNER PIPE	1	2									
	Q153002000	TORNILLO TAPON	CAP BOLT	1	2									
	Q223019000	TUERCA 3/8 GAS LATÓN	NUT 3/8 GAS BRASS	1	2									
4	R302400000	TOBERA Ø 1,65 B-P	NOZZLE Ø 1.65 B-P	1	2									
4	U054400000	TOBERA Ø 2,5 G-N	NOZZLE Ø 2.5 G-N	1	2									
5	U915014000	PORTATOBERAS HORNO	OVEN NOZZLE HOLDER	1	2									
	Q306055000	ARANDELA16X10,3X1	WASHER 16X10.3X1	1	2									
	Q223019000	TUERCA 3/8 GAS LATÓN	NUT 3/8 GAS BRASS	1	2									
6	H015039000	TUBO ENCENDIDO COMPLETO	COMPLETE IGNITION PIPE	1	2									
S/Nº	X082831000	TAPA TUBO ENCENDIDO COMPLET	FULL COVER ON TUBE	1	2								31.03.12	
7	U322118000	PILOTO COMPLETO 100.062	COMPLETE PILOT LIGHT 100,062	1	2									
	U442137000	INYECTOR Ø 0,40 G-N	INJECTOR Ø 0.40 G-N	1	2									
	U222130000	TERMOPAR L=600	THERMOCOUPLE L=600	1	2									
	X022131000	BUJIA	SPARK PLUG	1	2									
8	H015026000	TUBO PILOTO BARBACOA	BARBECUE PILOT PIPE	1	2									
9	U022119000	GRIFO 18700 BY-PASS 1,30	TAP 18700 BY-PASS 1.30	1	2									
10	U022117000	MANDO MONTADO Ø8	MOUNTED CONTROL Ø8	1	2									
11	R042634000	SOPORTE CONEXIÓN	SUPPORT CONNECTION	1	1							03.06.12		
11	12045050	SOPORTE TREN-CHISPAS AD	SUPPORT TRAIN SPARK AD	1	1							10.09.12		
11	12046891	SOPORTE TREN-CHISPAS AD MEK	SUPPORT TRAIN SPARK AD MEK	1	1								31,10,11	
	Q012031000	TORNILLO EXAGONAL M5x10 A304	HEXAGONAL BOLT M5x10 A304	2	2									
	Q221342000	REMACHE EXAGONAL M5	HEXAGONAL RIVET M5	2	2									
12	X163014000	ENCENDEDOR PARA 2 BUJIAS	LIGHTER FOR 2 PLUGS	1	1									
13	Z713035000	REGLETA 6MM	C6MM STRIP	1	1									
	Q151301000	PHILIPS 8x5/8	PHILIPS 8X5/8	1	2									

MOD.	BARBACOA / CHARCOAL GRILLS	ZONA / ZONE	PARTE FUNCIONAL / FUNCTIONAL PART	PLANO DIAGRAM	C-2933

ITEM	CODIGO REFERENCE	DENOMINACION	DENOMINATION	BG9-05 PLUS	BG9-10 PLUS							ELIMINADO ELIMINATED	INTRODUCID. INTRODUCED	NOTAS
14	U912104000	BRIDA AMARRE GRIFO 1/2"	TAP FASTENING FLANGE 1/2"	1	2									
	Q122032000	TORNILLO ALLEN M.5x15	ALLEN HEAD SCREW M.5x15	1	2									
15	T723009000	PULSADOR SERIE MICRO	MICRO SWITCH SERIES	1	1									
16	H015042000	TUBO DESAGÜE COMPL. BARBAC	DRAIN PIPE	1	1									
17	H015032000	DISTRIBUIDOR COMPL. BG9-05 AD	COMP. DISTRIBUTOR BG9-05 AD	1	_									
17	H025012000	DISTRIBUIDOR COMPL. BG9-10 AD	COMP. DISTRIBUTOR BG9-10 AD	_	1									
	Q221342000	REMACHE EXAGONAL M5	HEXAGONAL RIVET M5	1	2									
	U635008000	TUERCA CIEGA 3/4	BLIND NUT 3/4	1	2									
	Q306051000	ARANDELA TAPON Ø 23,5x3	CAP WASHER Ø 23.5x3	2	2									

MOD.	BARBACOA / CHARCOAL GRILLS	ZONA / ZONE	VARIOS / MISCELLANEOUS	PLANO DIAGRAM	

ITEM	CODIGO REFERENCE	DENOMINACION	DENOMINATION	BG9-05 PLUS	BG9-10 PLUS							ELIMINADO ELIMINATED	INTRODUCID. INTRODUCED	NOTAS
	H016518000	FOLLETO DE INSTRUCCIONES BG	INSTRUCTION LEAFLET BG	1	1									
	U023001000	ESQUEMA TEORICO ADHESIVO AD	THEOR. DIAGRAM LABEL AD	1	1									PLANO HB-80558
	T056502000	CARBON VOLCANICO (BOLSA)	VOLCANIC ROCK CHARCOAL	1	2									
	U963006000	CABLE. ENCENDEDOR ENCIMERA	TOP LIGHTER WIRING	1	1									
	U323007000	CABLE ENCENDEDOR A BUJIA	LIGHTER TO SPARK PLUG CAB.	1	2									
	Z603041000	CABLE ALIMENTACION	POWER WIRING	1	1									

MOD.	BARBACOA / CHARCOAL GRILLS	ZONA / ZONE	REPUESTOS RECOMENDADOS RECOMMENDED SPARE PART	PLANO DIAGRAM	

ITEM	CODIGO REFERENCE	DENOMINACION	DENOMINATION	BG9-05 PLUS	BG9-10 PLUS							ELIMINADO ELIMINATED	INTRODUCID. INTRODUCED	NOTAS
7	U322118000	PILOTO COMPLETO 100.062	COMPLETE PILOT LIGHT 100,062	1	2									C-2933
9	U022119000	GRIFO 18700 BY-PASS 1,30	TAP 18700 BY-PASS 1.30	1	2									C-2933
12	X163014000	ENCENDEDOR PARA 2 BUJIAS	LIGHTER FOR 2 PLUGS	1	1									C-2933
15	T723009000	PULSADOR SERIE MICRO	MICRO SWITCH SERIES	1	1									C-2933

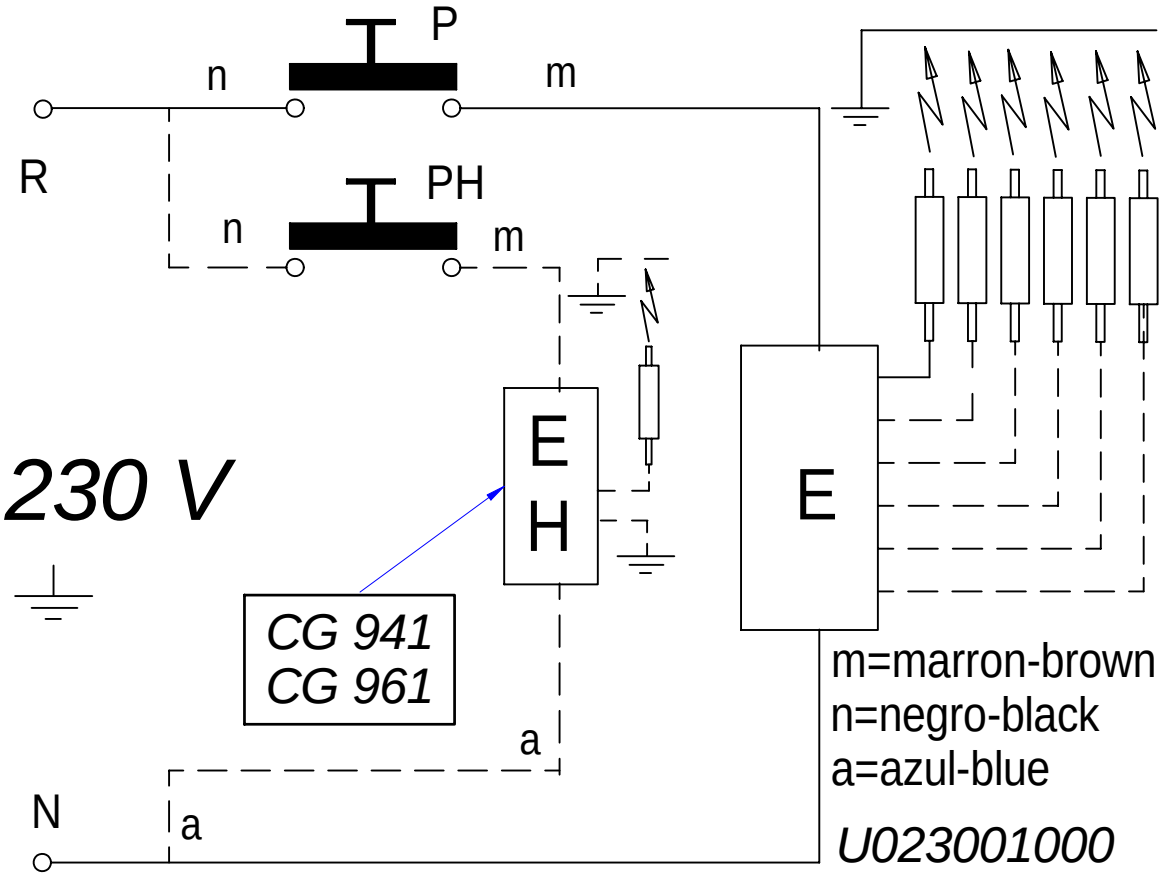

-	Eskema teorikoa: ADVANCE	-	-	U023001000	-
Zk./Nº	Pieza	Cant.	Materiala/Material	Klas. zk/Nº Clas.	Gainazal akabera/Tratamiento
Zk./Nº	Aldaketa/Modificaciones		Nork proposatua/Propuesta de	Data/Fecha	Perdoi orokorrak Tolerancias generales
-	-		-	-	
-	-		-	-	< 5 ± 0.2 / 50 ÷ 100 ± 0.8
-	-		-	-	5 ÷ 25 ± 0.4 / >100 ± 1
-	-		-	-	25 ÷ 50 ± 0.6 / α ± 1
-	-		-	-	

	Sinadura/Firma	Data/Fecha		Gainazal perdoia Mecanizado superficial
Marraztua/Dibujado	**e.carrascal**	**2008-11-25**	FAGOR Fagor Industrial,Koop.Elk, Mugatua	—
Proiektatua/Proyectado	**e.carrascal**	**2008-11-25**		
Egiaztatua/Comprobado	I.Alberdi	**2008-11-25**		

Eskala/Escala	EGOSKETA	Plano Zk./Plano Nº
-		HB-80558
		- Zk. ord. du
	Plano hau ezin daiteke erabili, ez berriztatu, gure baimenik gabe.	- Zk.gaitik ord.