Modello/Type: **60/30 SPE**

cod./num. 2531412.00

data/date: 14/06/2013

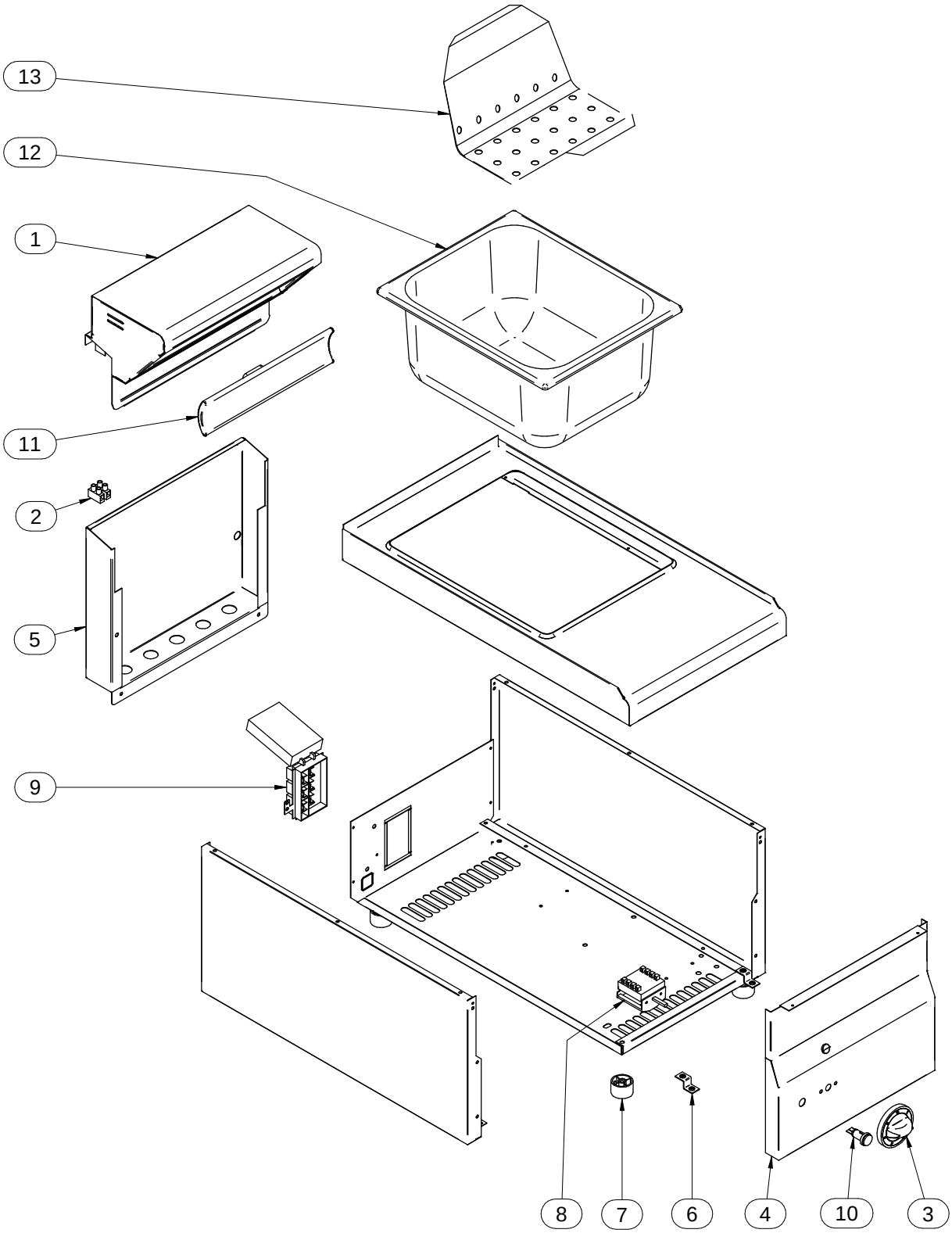

Modello Type:	60/30 SPE				cod. / num.	2531413.00
					data / date:	14/06/2013
POS. ITEM	CODICE CODE	DESCRIZIONE	DESCRIPTION	DENOMINATION	BENENNUNG	NOTE / NOTES
1	611.729.00	ALZATINA	UPSTAND	DOSSERET	AUFKANTUNG	
2	663.003.00	MORSETTIERA	TERMINAL BOARD	BORNES	KLEMMENBRETT	
3	612.010.00	MANOPOLA	KNOB	BOUTON	DREHKNOPF	
4	256.078.00	CRUSCOTTO	CONTROL PANEL	BANDEAU	BEDIENBLENDE	
5	621.751.00	PANNELLO POSTERIORE	BACK PANEL	PANNEAU POSTERIEUR	HINTERBRETT	
6	256.002.00	STAFFA FISSAGGIO CRUSCOTTO	CONTROL PANEL FIXING BRACKET	EQUERRE FIXATION BANDEAU	BEFESTIGUNGSWINKEL BEDIENBLENDE	
7	651.001.00	PIEDINO	FOOT	PIED	STELLFUSS	
8	661.000.00	COMMUTATORE	CHANGE-OVER SWITCH	COMMUTATEUR	UMSCHALTER	
9	663.040.00	MORSETTIERA	TERMINAL BOARD	BORNES	KLEMMENBRETT	
10	663.043.00	SPIA VERDE	GREEN INDICATOR LIGHT	LAMPE TEMOIN VERTE	GRUENE KONTROLLAMPE	
11	665.010.00	RESISTENZA	HEATING ELEMENT	RESISTANCE	HEIZKOERPER	
12	600.972.40	BACINELLA	CONTAINER	BAC	BEHÄLTER	
13	621.811.00	FALSOFONDO	FALSE BOTTOM	FAUX-FOND	ABTROPFPLATTE	
14						
15						
16						
17						
18						
19						
20						