SAGI - BASE REFRIGERATA "SNACK" lt. 180, prof.70 cm, 0/+10°C
KSA2 - 01-07-2008 »

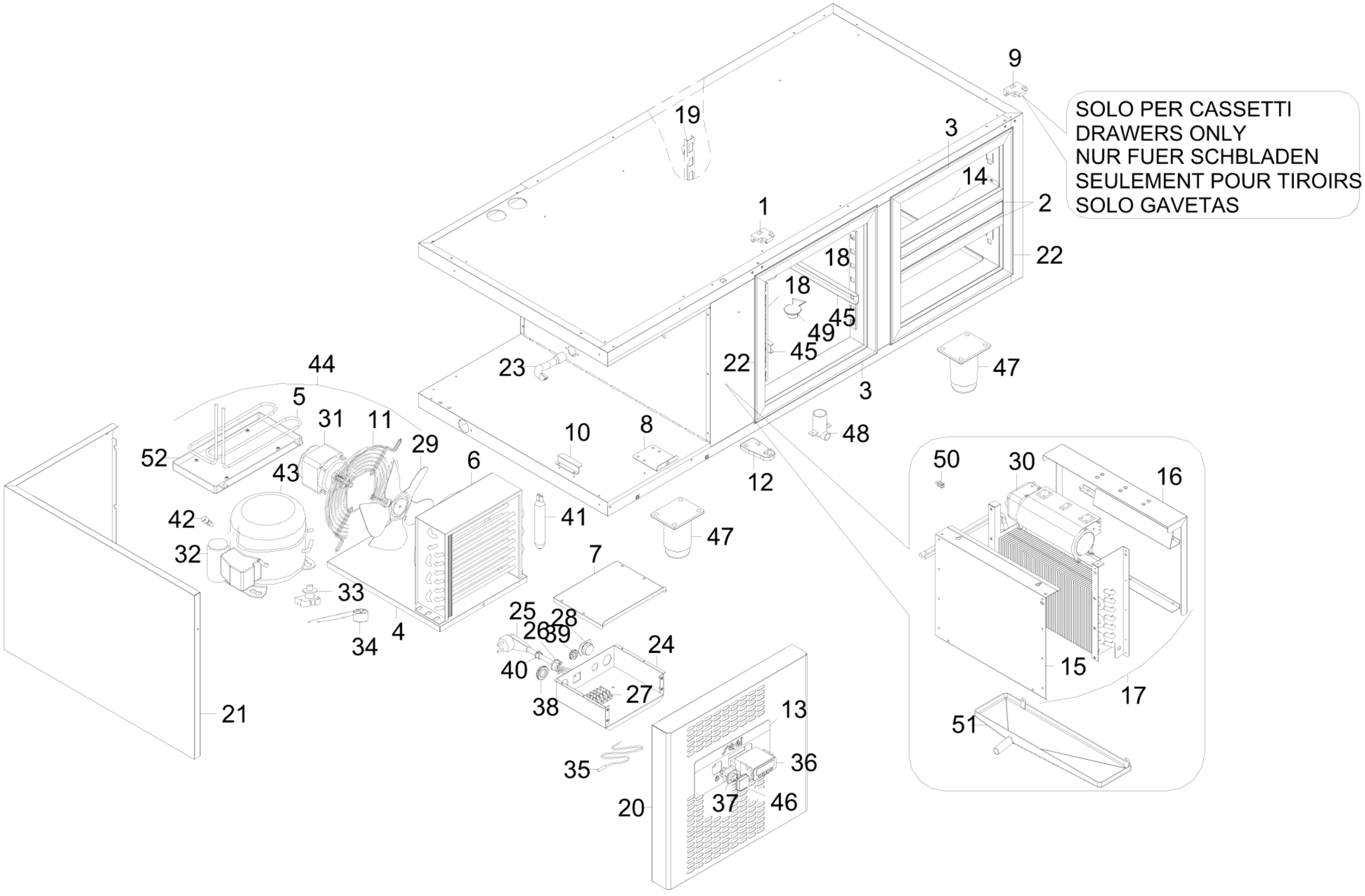

Modello Typ Model Modele Modelo

		KSA KSAM	KSA2 KSA2M	KSB KSBM	KSB2 KSB2M
Num.cassetti Schublad Drawers Tiroirs	1/2SUP	-	1	-	1
Gabetas	1/2INF	-	1	-	1
Porte Türen Doors Portes Puertas		2	1	3	2

