F A G O R

SPARE PARTS CATALOGUE
ERSATZTEILKATALOG
CATALOGUE PIECES DETACHEES
CATALOGO PARTI RICAMBIO
CATALOGO DE PIEZAS DE RECAMBIO
CATALOGO PECAS DE REPOSICAO

LP 70

08-07-2009

LP 70

Tav.1: Carrozzeria
Tav.2: Impianto elettrico
Tav.3: Componenti in vasca
Tav.4: Circuito di lavaggio
Tav.5: Circuito di risciacquo
Tav.6: Lance di lavaggio
Tav.7: Pompa di lavaggio

Tav.1: Machine body
Tav.2: Electrical components
Tav.3: Components in the tank
Tav.4: Washing circuit
Tav.5: Rinsing circuit
Tav.6: Washing arms
Tav.7: Washing pump

Tab.1: Carrocería
Tab.2: Instalación eléctrica
Tab.3: Componentes en cuba
Tab.4: Circuito de lavado
Tab.5: Circuito d'enjuague
Tab.6: Brazos de lavado
Tab.7: Bomba de lavado

Tab.1: Carrosserie
Tab.2: Installation électrique
Tab.3: Composants de cuve
Tab.4: Circuit de lavage
Tab.5: Circuit de rinçage
Tab.6: Bras de lavage
Tab.7: Pompe de lavage

Taf.1: Verkleidung
Taf.2: Elektrische Anlage
Taf.3: Bauteile im Waschtank
Taf.4: Spuelschaltung
Taf.5: Nachspuelschaltung
Taf.6: Wascharme
Taf.7: Spuelpumpe

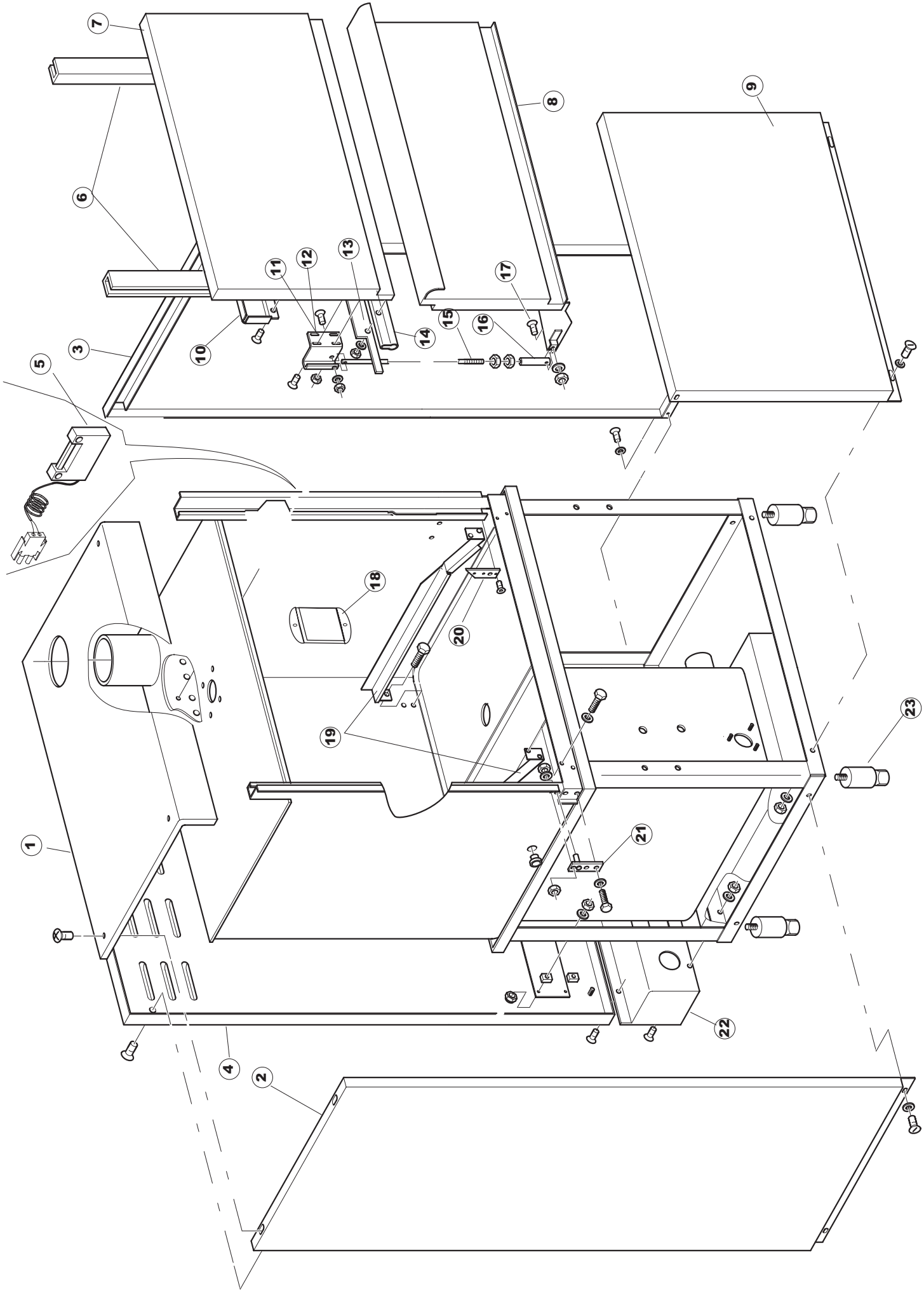
7
8
9
6
11
12
13
17
15
16
14
10
3
5
18
20
19
23
21
1
22
4
2

Pagina 1

1	42118	PANN.SUPERIORE U132 PANEL, UPPER U132 OB. PLATTE U132 PANN.SUPERIEUR U132 PANEL SUPERIOR U132	
2	42511	PANNELLO LATERALE SINISTRO SIDE PANEL - LEFT. SEITLICHES PANEEL - LINKS PANNEAU LATERAL - GAUCHE. PANEL LATERAL IZQDO.	
3	42512	PANNELO LATERALE DX	
4	42622	PANNELLO RETRO	
5	80871	MICRO MAGNETICO MAGNETIC DOOR SWITCH TUERKONTAKTSCHALTER CONTACTE MAGNETIQUE CONTACTO MAGNETICO	
6	44265	GUIDA PORTA DOOR SLIDING GUIDE TUER-GLEITENDER BAHN - OBEN - GUIDE GLISSANTE PORTE GUIA PUERTA	
8	42670	PORTA INFERIORE DOOR TUER PORTE PUERTA INFERIOR	
9	42124	PANNELLO ANTERIORE LP201 COMPLETO PANEL DELANT.LP201 COMPLETO.	
10	42042	BATTUTA SPORTELLO SUPERIORE U70 DOOR-LEDGE, SUPERIORE U70 TÜRANSCHLAG, OBEN U70 FEUILLURE VOLET SUP.U70 TOPE PUERTA SUPERIOR U70	
11	4108701	SQUADRA DESTRA AGGANCIO TIRANTE SPORTELLO SUPERIC RIGHT BRACKET FOR UPPER DOOR TIE ROD FASTENING RECHT-HATER FUER ANKUPPELN DER OBEREN TUER-STANG EQUERRE DROITE ACCROCHAGE TIRANT PORTE SUPERIEUR ESCUAD DCHA. FIJA TIR PUERTA SUP. LP PG ACAB.	
12	4108801	SQUADRETTA SINISTRA AGGANCIO TIRANTE SPORTELLO SUF LEFT BRACKET FOR UPPER DOOR TIE ROD CONNECTION FOF LINK-HALTER FUER ANKUPPELN OBEREN TUERSTANGE FUEF EQUERRE DROITE ACCROCHAGE TIRANTE PORTE SUPERIEUI ESCUAD IZQDA. FIJ TIR PUERTA SUP. LP PG ACAB.	
15	44593	TIRANTE PORTA DOOR LEVER HEBEL TUER MONT TIRANT PORTE TIRANTE PUERTA	
16	41095	BUSSOLA TIRANTE PORTA 610/610H BUSHING, DOOR TIE-ROD 610/610H BUCHSE, TÜRZUGSTAB 610/610H DOUILLE TIRANT PORTE 610/610H CASQUILLO TIRANTE PUERTA 610/610H	
17	486078	VITE TC-CE M6X40 INOX SCREW TC-CE M6X40 INOX SCHRAUBE TC-CE M6X40 INOX VIS TC-CE M6X40 INOX TORNILLO TC-CE M6X40 INOX	
18	43527	PROTEZIONE GUARD SCHUTZVERKLEIDUNG PROTECTION SOPORTE DE PROTECCION	

19	42539	GUIDA CESTO RACK GUIDE KORBFUEHRUNG COULISSE PANIER GUIA CESTA	
20	4113501	SPESSORE LAT.SPORTELLO SIDE THICKNESS FOR DOOR SEITL. EINLEGERING FÜR TÜR EPAISSEUR LAT. VOLET GROSOR LAT. PUERTA	
21	4114501	PIASTRINA PERNO SPORTELLO U61.. PLATE, DOOR PIN U61.. PLATTE, TÜRANGEL U61.. PLAQUE PIVOT VOLET U61.. PLANCHITA PERNO PUERTA U61. .	
22	42621	PANNELLO RETRO INFERIORE REAR PANEL RUECKWANDVERKLEIDUNG PANNEAU ARRIERE PANEL PARTE POST. INFERIOR	
23	927006	PIEDE REGOLABILE X TRAINO FOOT, ADJUST. FOR TACK CONVEYOR VERSTELLFUSS FÜR KORBTR. PIED REGLABLE POUR AVANC. PATA REGULABLE X ACCION.	

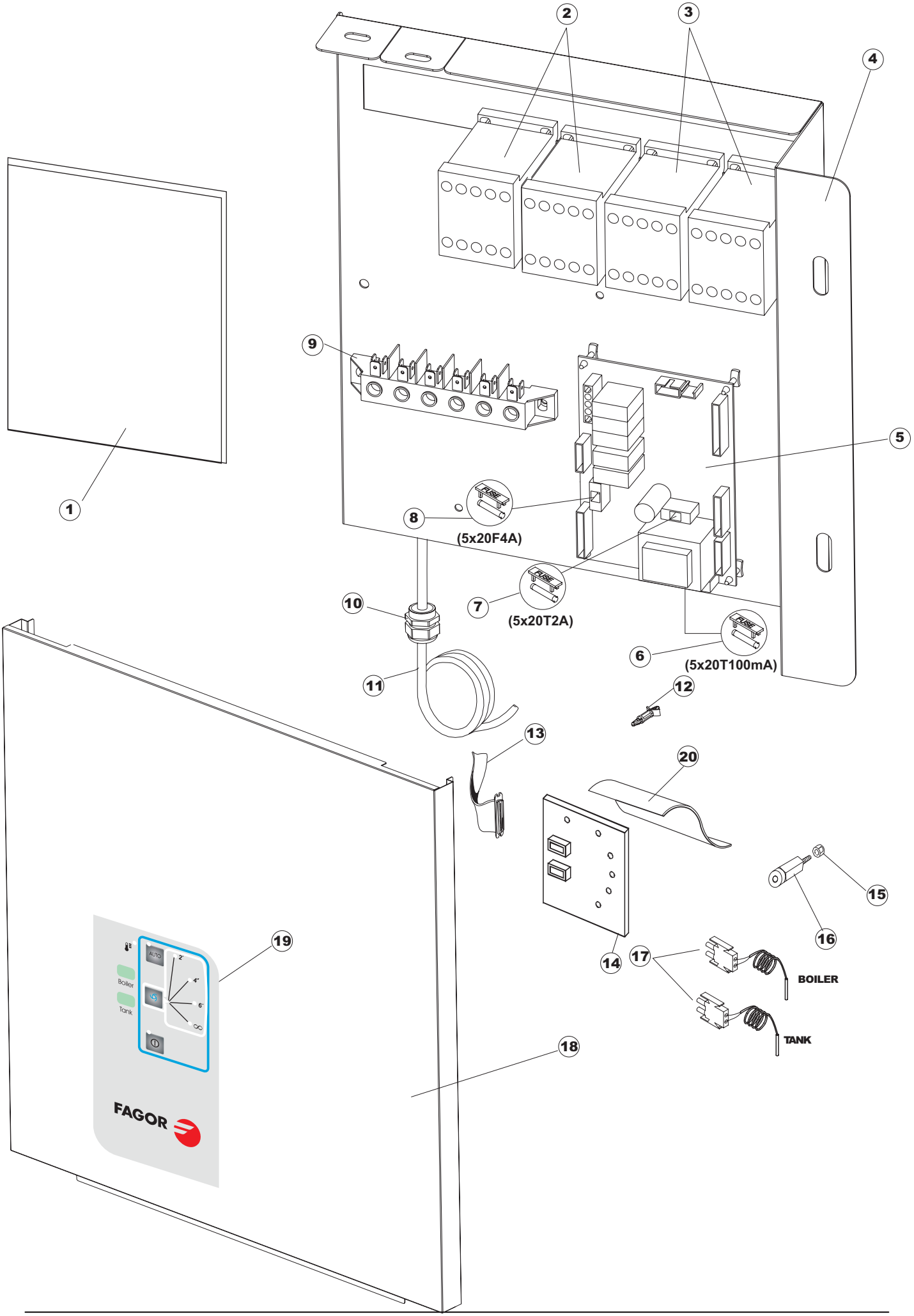
1
2
3
4
5
6
(5x20T100mA)
7
(5x20T2A)
8
(5x20F4A)
9
10
11
12
13
14
15
16
17
BOILER
TANK
18
19
20
AUTO
Boiler
Tank
FAGOR

Pagina 2

1	41416	COPERCHIO COVER DECKEL COUVERCLE TAPA PANEL	
2	80350	CONTAT 230-50/60HZ 3RT1016-1AP01 CONTACT, 230-50/60HZ 3RT1016-1AP01 KONTAKT, 230-50/60HZ 3RT1016-1AP01 CONTACT 230-50/60HZ 3RT1016-1AP01 VER CODIGO 229037	
3	DTC112NO	$ CONTAT CL01A310T6 230 50/60HZ $CONTACTOR CLO1A310T6 230 50/60HZ $SCHALTSCHÜTZ CLO1A310T6 230 50/60HZ $ CONTACT CL01A310T6 230 50/60HZ VER CODIGO 926282	
5	215032	SCHEDA ELETTRONICA GET50 MAIN BOARD KARTE CARTE ELECTRONIQUE TARJETA CHORROS50 MICRO 644	
6	228012	FUSIBILE 5X20 T100MA FUSE SICHERUNG FUSIBLE FUSIBLE 5X20 T100MA	
7	228011	FUSIBILE 5X20 T2A FUSE SICHERUNG FUSIBLE FUSIBLE 5X20 T2A	
8	228004	FUSIBILE 5X20 4A FAST FUSE, 5X20 4A FAST SICHERUNG, 5X20 4A FAST FUSIBLE 5X20 4A FAST FUSIBLE 5X20 4A FAST	
9	220011	* MORSETTIERA 5.POLI + TERRA FV.122 * TERMINAL BOARD, 5-POLES + EARTH FV.122 * KLEMMENBRETT, 5-POLIG + ERDUNG FV.122 * PLAQUE A BORNE 5POLES + TERRE FV.122 * BORNERO 5. POLOS + TIERRA FV. 122	
10	DEP521	PRESSACAVO PG21 (BER 4721) CABLE GLAND PG21 (BER 4721) KABELSCHELLE PG21 (BER 4721) SERRE CABLE PG21 (BER 4721) SUJETA-CABLE PG21 (BER 4721)	
11	80997	CAVO ALIMENTAZIONE CABLE ALIMENTACION 5X2,5MM (H07RN-F)	
12	CWP2	PIEDINI SUPPORTO SCHEDA ELET.(ART.DRA6A) FEET, ELECTR.CARD SUPPORT(ART.DRA6A) STÜTZFÜSSE FÜR PLATINE (ART.DRA6A) PIEDS SUPPORT FICHE ELECTR.(ART.DRA6A) PATAS SOPORTE TARJETA ELECT. (ART.DRA6A)	
13	80933	CAVO FLAT COMANDI SUPERIORI CAPOT CABLE FLAT CAPOT KABEL FLAT TRISSE LIAISON CABLE FLAT MANDOS SUPERIORES CAPOT	
14	80889	TASTIERA COMANDI CONTROL KEYBOARD BEDINGUNGEN-TESTENBRETT TABLEAU A POUSSOIRS COMMANDES TECLADO DE MANDOS	
15	417119	DADO M3 PLASTICA BIANCO NUT, M3 PLASTIC WHITE SCHRAUBENMUTTER, M3 KUNST. WEISS ECROU M3 PLASTIQUE BLANC TUERCA M3 PLASTICO BLANCO	
16	419036	SPACER SPACER, M3 ABSTANDSSTÜCK, M3 ENTRETOISE M3 DISTANCIADOR M3	

17	231016	SONDA TEMPERATURA TEMP. PROBE KUGEL SONDE SONDA TEMPERATURA (AMPOLLA ACERO)	
18	42124	PANNELLO ANTERIORE LP201 COMPLETO PANEL DELANT.LP201 COMPLETO.	
19	41381	POLIESTERE POLYESTERE POLYESTERE POLYESTERE POLIESTER LAVA-OLLAS FAGOR	
20	69810	TENDINA COPERTURA TASTIERA PANNELLO ANTERIORE CURTAIN VORHANG RIDEAU CORTINA COPERTURA TECLADO PAN. DELANT.	

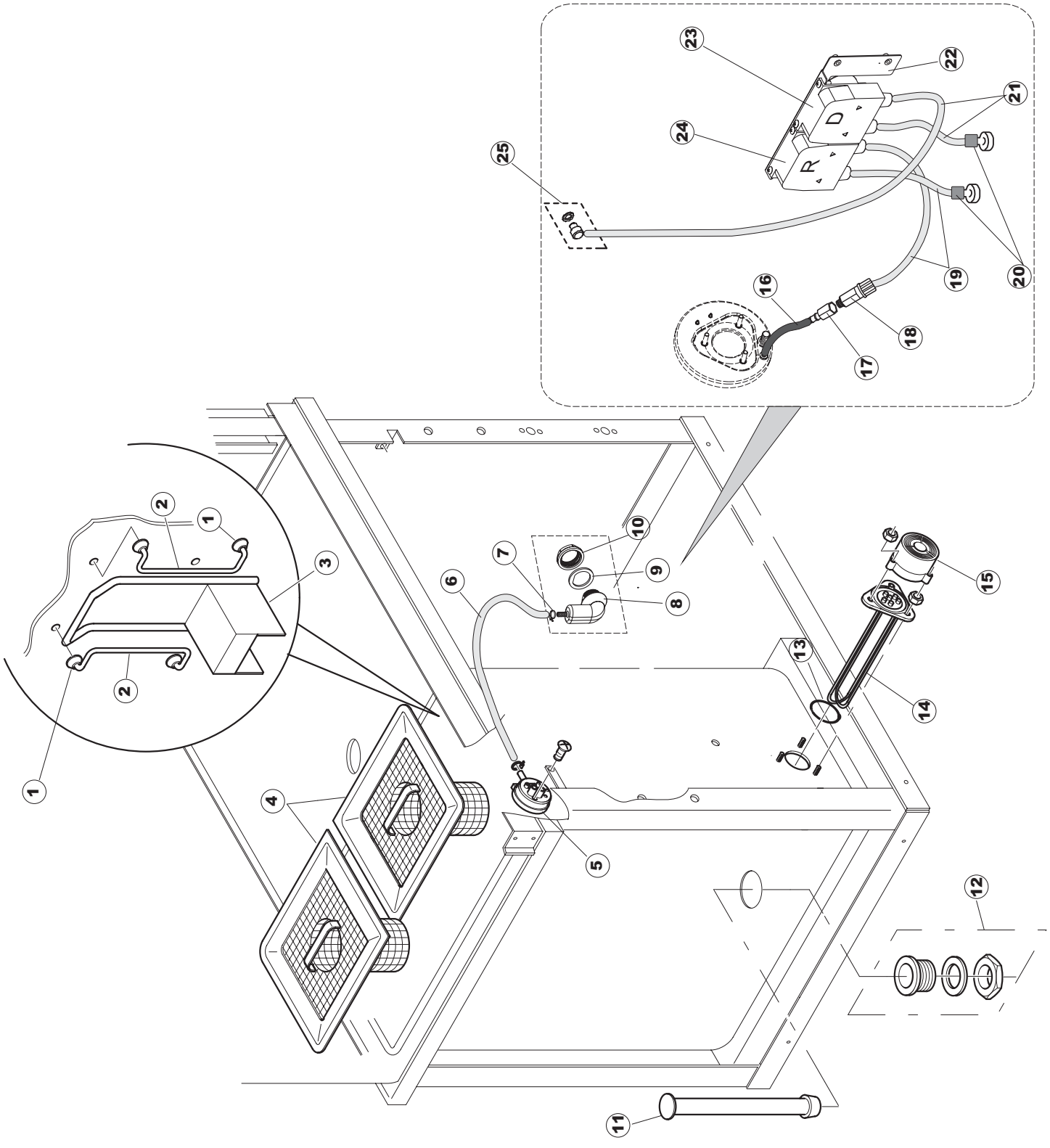
23
22
21
24
D
R
25
19
20
16
18
17
2
1
3
2
1
10
7
9
6
8
15
13
14
4
5
12
11

Pagina 3

1	472061	RONDELLA X GUIDA CESTO CL.3 WASHER, FOR BASKET GUIDE CL.3 UNTERLEGSCHEIBE, FÜR KORBFÜHRUNG KL.3 RONDELLE POUR GUIDE PANIER CL.3 ARANDELA X GUIA CESTA CL. 3	
2	42092	GUIDA FILTRO ASPIRAZIONE U70 GUIDE, EXHAUST. FILTER U70 FÜHRUNG, ABSAUG.FILTER U70 GUIDE FILTRE ASPIRATION U70 GUIA FILTRO ASPIRACION U70	
3	42089	FILTRO ASPIRAZIONE POMPA U70 FILTER, SUCTION FOR PUMP U70 FILTER, ABSAUG. FÜR PUMPE U70 FILTRE ASPIRATION POMPE U70 FILTRO ASPIRACION BOMBA U70	
4	42165	FILTRO VASCA COMPL.U70 FILTER, TANK - COMPL.U70 FILTER, TANK - KOMPL.U70 FILTRE CUVE COMPL.U70 FILTRO CUBETA COMPL. U70	
5	926049	PRESSOSTATO 761999 180-70 PRESSURE SWITCH 761999 180-70 DRUCKSCHALTER 761999 180-70 PRESSOSTAT 761999 180-70 PRESOSTATO 761999 180-70	
6	143253	TUBO SILICONE 3X8 SILICON PIPE 3X8 SILIKONSCHLAUCH 3X8 TUYAU SILICONE 3X8 TUBO SILICONA 3X8	
7	CFF10073	FASCETTA A FILO 10073 COLLIER DE SERRAGE EN FIL D'ACIER 10073 SCHLAUGSCHELLE AUS DRAHT 10073 WIRE HOSECLAMP 10073 ABRAZADERA CON HILO 10073	
8	107012	CAMPANA PRESSOSTATO (L) RV40-50-CAPOTE AIR TRAP WINDKESSEL PRISE D'AIR CAMPANA PRESOSTATO (L) RV40-50-CAPOTA	
9	437098	GUARNIZIONE NUOVA CAMP.PRESS. PACKING FOR AIR TRAP OF PRESSURE SWITCH DICHTUNG FUER WINDKESSEL DES DRUECKWWAEC HTERS JOINT PRISE D'AIRE PRESSOSTAT JUNTA NUEVA CAMP.PRES.	
10	417120	DADO PLASTICA GRIGIO PLASTIC NUT KUNSTSTOFFMUTTER 1-1/4 ECROU EN PLASTIQUE TUERCA PLASTICO GRIS	
11	42181	TROPPO PIENO INOX U70 OVERFLOW, INOX U70 ÜBERLAUF, INOX U70 TROP-PLEIN INOX U70 REBOSE INOX U70	
12	42185	PILETTA COMPL.INOX 1"1/2 (01713007) DRAIN, COMPL., INOX 1"1/2 (01713007) ABFLUSS, KOMPL., INOX 1"1/2 (01713007) TUYAU DE VIDANGE COMPL.INOX 1"1/2 (01713007) PILETA COMPL. INOX 1"1/2 (01713007)	
13	456002	OR 48x6,2 O-ring 48x6,2 O-Ring 48x6,2 OR 48x6,2 OR 48x6,2	
14	230020C	KIT RESISTENZA REB230020 (8KW) KIT, RESISTANCE REB230020 (8KW) KIT, WIDERSTAND REB230020 (8KW) KIT RESISTANCE REB230020 (8KW) KIT RESISTENCIA REB230020 (8KW)	
15	69870	PROTEZIONE RESISTENZA BOILER BOILER HEATING ELEMENT PROTECTION HEIZUNGSCHUETZ DES WARMWASSERBEREITERS PROTECTION RESISTANCE BOILER PROTECCION RESISTENCIA CALENTADOR	

16	143005	TUBO PRESS.TP 5x11 (CASER/15/NL C4N) PIPE, PRESSURE SWITCH TP 5x11 (CASER/15/NL C4N) ROHR, DRUCKSCHALTER TP 5x11 (CASER/15/NL C4N) TUYAU PRESS.TP 5x11 (CASER/15/NL C4N) TUBO PRES. TP 5x11 (CASER/15/NL C4N)	
17	468201	RACCORDO CALZATUBO PER INIEZ.BRILL. CONNECTION ANSCHLUSS RACCORD EMPALME CALZATUBO PARA INYECC. ABRILL.	
18	468200	RACCORDO ACCIAIO INOX AISI316 1/8" STAINLESS STEEL CONNECTION AISI316 1/8" ANSCHLUSSSTUECK AUS NICHTROSTENDEM STAHL RACCORD EN ACIER INOXYDABLE 1/8" EMPALME ACERO INOX AISI316 1/8"	
19	H.775601	TUBO 4x6 CRISTAL BLUE PVC PIPE 4x6 CRISTAL BLUE PVC ROHR 4x6 CRISTAL BLAU PVC TUYAU 4x6 CRISTAL BLEU PVC TUBO 4x6 CRISTAL AZUL PVC	
20	121075	FILTRO ASPIR.INOX(775239-001) FILTER, SUCT.INOX (775239-001) FILTER, ABSAUG.INOX (775239-001) FILTRE ASPIR.INOX(775239-001) FILTRO ASPIR. INOX(775239-001)	
21	143194	TUBO 4x6 CRISTAL TRASPARENTE PIPE 4x6 CRISTAL, TRANSP. ROHR 4x6 CRISTAL, DURCHS. TUYAU 4x6 CRISTAL TRANSPARENT TUBO 4x6 CRISTAL TRASPARENTE	
22	80675	STAFFA DOSATORI PERISTALTICI BRACKET TRAGBUEGEL ETRIER SOPORTE DOSIFICADORES PERIST. PG ACABADO	
23	209022	DOSAT.PERIST.DETERGENTE NON REG. PERISTALTIC DISPENSER PERISTALTISCHES DOSIERGERAET DOSEUR PÉRISTALTIQUE DOSSIFIC.PERIST.DETERGENTE NO REG.	Optional
24	209024	DOSAT.PERIST.BRILLANTANTE NON REG. PERISTALTIC DISPENSER PERISTALTISCHES DOSIERGERAET DOSEUR PÉRISTALTIQUE DOSIFIC.PERIST. ABRILLANTADOR NO REG.	Optional
25	468151	RACCORDO ENTRATA SAPONE CPL NM * SALDATO UNION, EXTRA DET. CPL NM * WELDED VERBINDUNGSST., SEIFENEINTRITT CPL NM * GESCHW. RACCORD ENTREE SAVON CPL NM * SOUDE EMPALME ENTRADA JABON CPL NM * SOLDADO	

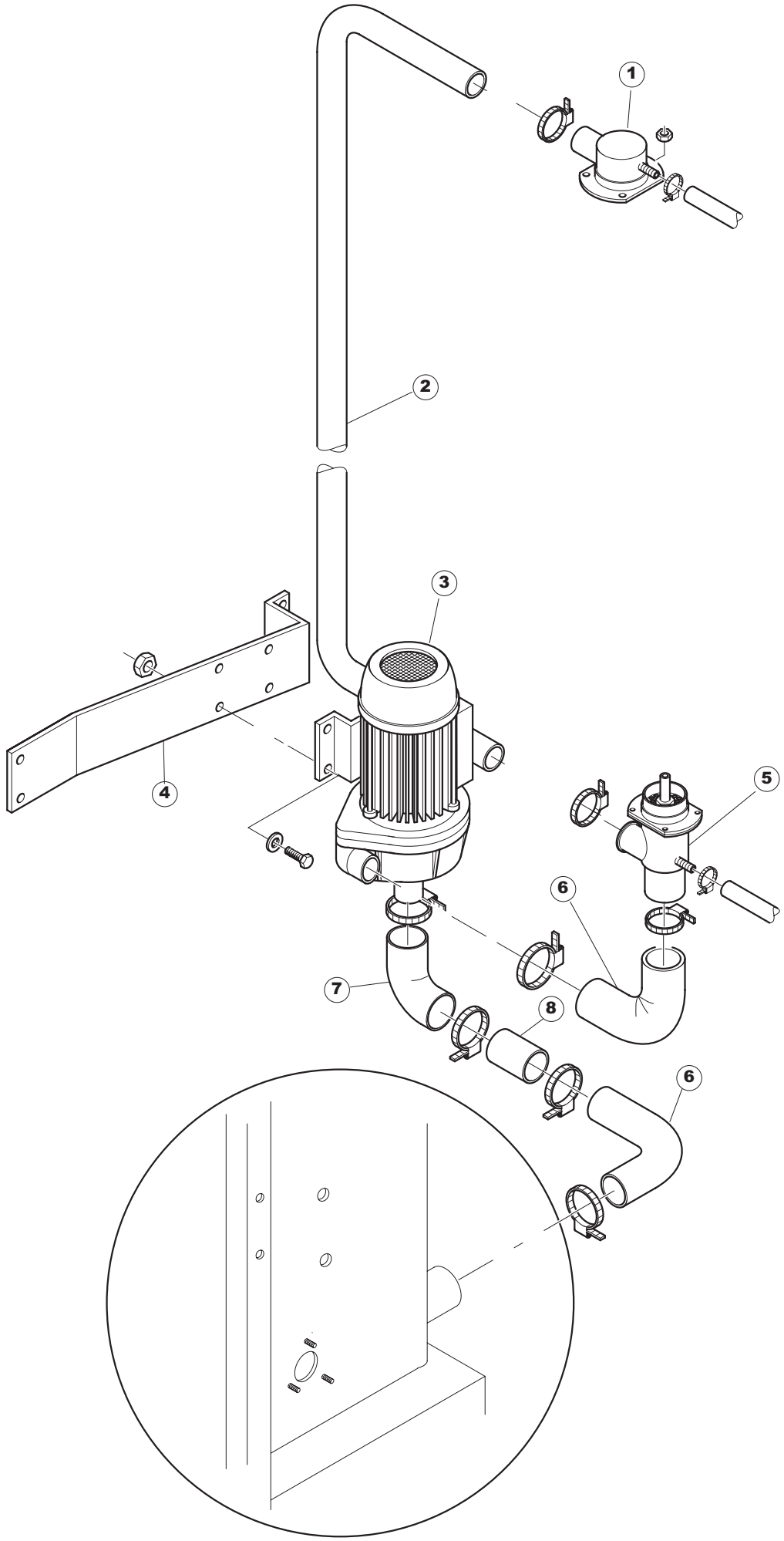
1
2
3
4
5
6
7
8
6

Pagina 4

1	4205901	RACCORDO LANCIA LAV.SUP.EW610H UNION, WASH.ARM UPP.EW610H VERBINDUNGSST., SPÜLARM OB.EW610H RACCORD RAMPE DE LAV.SUP.EW610H EMPALME LANZA LAV. SUP. EW610H	
2	43555	TUBO PIPE ROHR TUYAU TUBO LAVADO	
3	929174	POMPA 4HP 230/400-50 RUOT.(2250/C) PUMP 4HP 230/400-50 ROTAT.(2250/C) PUMPE 4HP 230/400-50 DREH.(2250/C) POMPE 4HP 230/400-50 PIV.(2250/C) BOMBA 4HP 230/400-50 RUOT. (2250/C)	
5	4206301	RACCORDO LANCIA LAV.INF.EW610.. UNION, WASH.ARM LOW.EW610.. VERBINDUNGSST., SPÜLARM UNTEN EW610.. RACCORD RAMPE DE LAV.INF.EW610.. EMPALME LANZA LAV. INF. EW610. .	
6	929164	GOMITO IN GOMMA P2703 SAIAG ELBOW, RUBBER P2703 SAIAG KNIESTÜCK, GUMMI P2703 SAIAG COUDE EN CAOUTCHOUC P2703 SAIAG CODO DE GOMA P2703 SAIAG	
7	926056	GOMITO GOMMA ASPIRAZIONE POMPA 120/140 ELBOW, RUBBER, EXHAUST. PUMP 120/140 KNIESTÜCK, GUMMI, ABSAUG.PUMPE 120/140 COUDE CAOUTCHOUC ASPIRATION POMPE 120/140 CODO GOMA ASPIRACION BOMBA 120/140	
8	929165	TRONCHETTO INOX D60 MM.92 (DIS.60507) STUB PIPE, INOX D60 MM.92 (DWG.60507) STUTZEN, INOX D60 MM.92 (ZEICHN.60507) TRONC INOX D60 MM.92 (DESS.60507) TRONCO INOX D60 MM. 92 (DIB. 60507)	

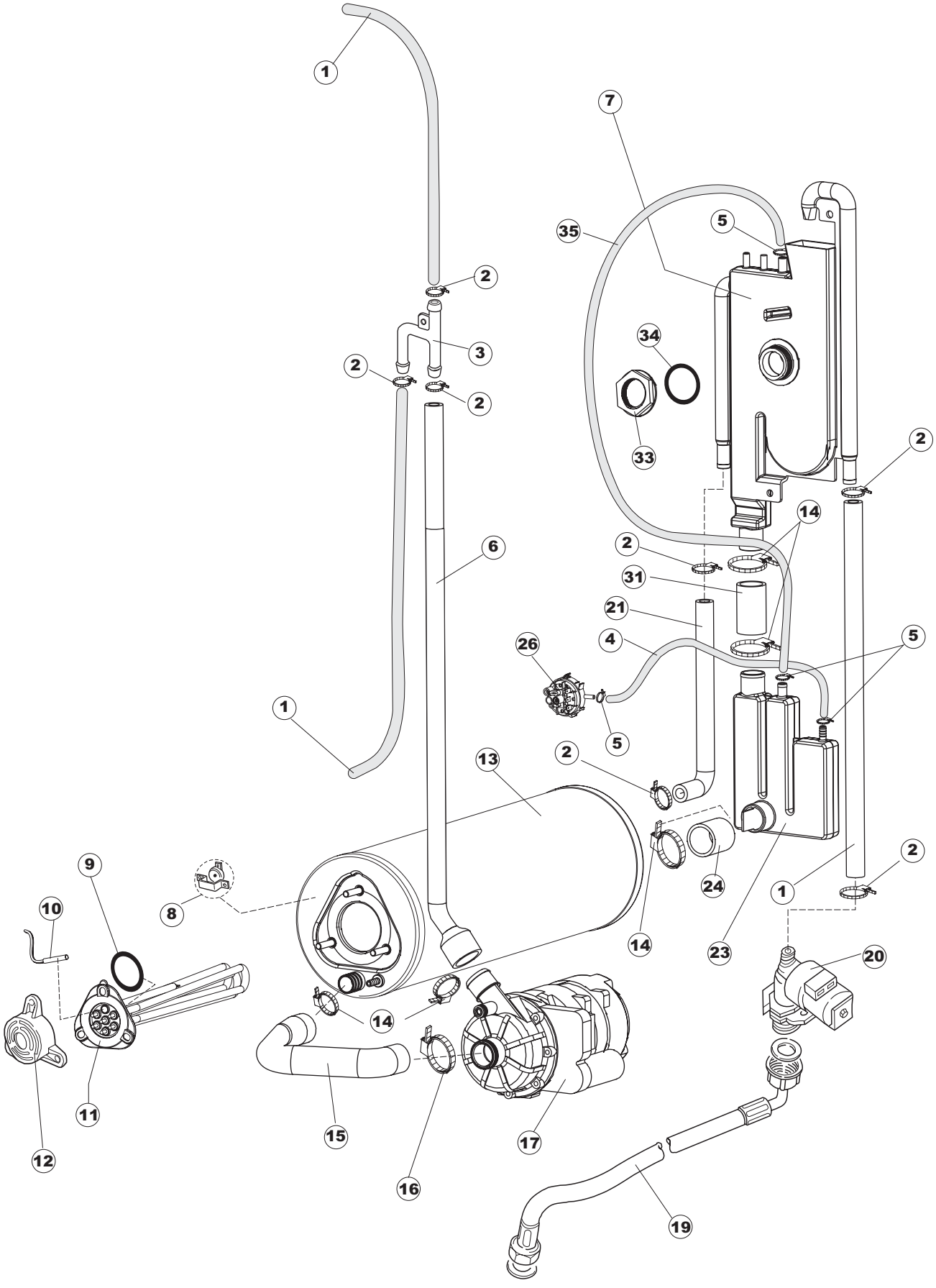
1
7
35
5
2
34
3
2
2
33
2
14
6
2
31
21
26
4
5
1
5
13
2
9
8
24
2
1
10
14
23
20
14
11
15
17
12
16
19

Pagina 5

1	143010	TUBO PRESS.TP 12X19.5 PIPE, PRESSURE SWITCH TP 12X19.5 ROHR, DRUCKSCHALTER TP 12X19.5 TUYAU PRESS.TP 12X19.5 TUBO PRES. TP 12X19. 5	
2	927322	FASCETTA NASTRO 14-24 CLAMP, TAPE 14-24 SCHELLE, BANDTR 14-24 BANDE DE SERRAGE CONVOYEUR 14-24 ABRAZADERA CINTA 12-22	
3	143173	GIUNZIONE RISC.PLAST.35/40/50 JOINT, RINSE PLAST.35/40/50 VERBIND., NACHSPÜLEN KUNST.35/40/50 JOINT RINC.PLAST.35/40/50 UNION ENJUAGUE PLAST. 35/40/50	
4	143131	TUBO GOMMA PIPE ROHR TUYAU VER CODIGO 143005	
5	423010	FASCETTA D8X12X7,5 TIPO TORRO ACC.W2 CLAMP, D8X12X7,5 TYPE TORRO ACC.W2 SCHELLE, D8X12X7,5 TYP TORRO ACC.W2 BANDE DE SERR. D8X12X7,5 TYPE TORRO ACC.W2 ABRAZADERA D8X12X7,5 TIPO TORRO ENC. W2	
6	41525	TUBO MANDATA RISCIACQUO (CRP) PIPE, DELIVERY PIPE FOR RINSE (CRP) ZUFLUSSROHR FÜR NACHSPÜLEN (CRP) TUYAU REFOULEMENT RINCAGE (CRP) TUBO IMPULSION ENJUAGUE (CRP)	
7	144021	AIRGAP SPECIALE LA50 PLASTIC AIRGAP AIR GAP GEOFFNETER BEHAELTER AIRGAP SPECIAL LA50 AIRGAP ESPECIAL LA50	
8	926189	TERMOSTATO BOILER SIC.95ø THERMOSTAT, BOILER, SAF.95ø THERMOSTAT, BOILER, SICHERH.95ø THERMOSTAT CHAUDIERE SEC. 95ø TERMOSTATO CALENTADOR SEG. 95ø	
9	456002	OR 48x6,2 O-ring 48x6,2 O-Ring 48x6,2 OR 48x6,2 OR 48x6,2	
10	231016	SONDA TEMPERATURA TEMP. PROBE KUGEL SONDE SONDA TEMPERATURA (AMPOLLA ACERO)	
11	230020C	KIT RESISTENZA REB230020 (8KW) KIT, RESISTANCE REB230020 (8KW) KIT, WIDERSTAND REB230020 (8KW) KIT RESISTANCE REB230020 (8KW) KIT RESISTENCIA REB230020 (8KW)	
12	69870	PROTEZIONE RESISTENZA BOILER BOILER HEATING ELEMENT PROTECTION HEIZUNGSCHUETZ DES WARMWASSERBEREITERS PROTECTION RESISTANCE BOILER PROTECCION RESISTENCIA CALENTADOR	
13	104061	BOILER CRP LA50 BOILER CRP BOILER CRP SURCHAUFFEUR CRP CALENTADOR CRP LA50	
14	CFS18	FASCETTA A VITE TORRO 20-32/9 CLAMP, HOSE-TYPE TORRO 20-32/9 SCHELLE, SCHRAUBE TORRO 20-32/9 BANDE DE SERRAGE A VIS TORRO 20-32/9 ABRAZADERA CON TORNILLO TORRO 20-32/9	
15	69068	MANICOTTO ASPIRAZ.CRP LA50 INTAKE COUPLING LA50 SAUGMUFFE LA50 MANCHON D'ASPIRATION MANGUITO ASPIRAC.CRP LA50	

16	423008	FASCETTA D20X32X9 TIPO TORRO ACC.W1 CLAMP, D20X32X9 TYPE TORRO ACC.W1 SCHELLE, D20X32X9 TYP TORRO ACC.W1 BANDE DE SERR. D20X32X9 TYPE TORRO ACC.W1 ABRAZADERA D20X32X9 TIPO TORRO ENC. W1	
17	80627	ELETTROPOMPA 200W 230V-1PH-50HZ CON CONDENSATOR PUMP PUMPE POMPE ELECTROBOMBA ENJUAGUE 200W	
19	929169	TUBO DI CARICO DEL TERMOPLASTICO PIPE, THERMOPLASTIC DELIVERY ROHR, EINLASS THERMOPLAST TUYAU DE CHARG. DU THERMOPLASTIQUE TUBO DE CARGA DEL TERMOPLASTICO	
20	240018	VALVOLA DI CARICO 1 VIA CRP LOADING S.VALVE 1-WAY CRP ZUFLUSSVENTIL 1-WEG CRP SOUPAPE DE CHARG. 1 VOIE CRP VALVULA DE CARGA 1 VIA CRP	
21	127098	MANICOTTO SFIATO BOILER CRP->BT COUPLING LA50 MUFFE LA50 MANCHON LA50 MANGUITO ALIVIAD. CALENTADOR CRP->BT LA50	
23	144027	SISTEMA CARICAMENTO CRP PLASTIC AIRGAP AIR GAP GEOFFNETER BEHAELTER SISTEMA CARGA CRP	
24	127095	MANICOTTO BOILER->SISTEMA CRP MANIFOLD MANGUITO CALENTADOR->SISTEMA CRP	
26	224002	PRESSOSTATO - 110/60 PRESSURE SWITCH - 110/60 DRUCKSCHALTER - 110/60 PRESSOSTAT - 110/60 PRESOSTATO - 110/60	
31	929171	TUBO GOMMA 20X30 HOSE, RUBBER 20X30 SCHLAUCH, GUMMI 20X30 TUYAU CAOUTCHOUC 20X30 TUBO GOMA 20X30	
33	417125	DADO IN PLAST.CON COLLARE(171571) NUT MUTTER ECROU TUERCA DE PLAST.CON COLLAR(171571)	
34	437104	GUARNIZIONE D45D33S2 EPDM 70SH RUBBER GASKET DICHTUNG JOINT JUNTA D45D33S2 EPDM 70SH	
35	143005	TUBO PRESS.TP 5x11 (CASER/15/NL C4N) PIPE, PRESSURE SWITCH TP 5x11 (CASER/15/NL C4N) ROHR, DRUCKSCHALTER TP 5x11 (CASER/15/NL C4N) TUYAU PRESS.TP 5x11 (CASER/15/NL C4N) TUBO PRES. TP 5x11 (CASER/15/NL C4N)	

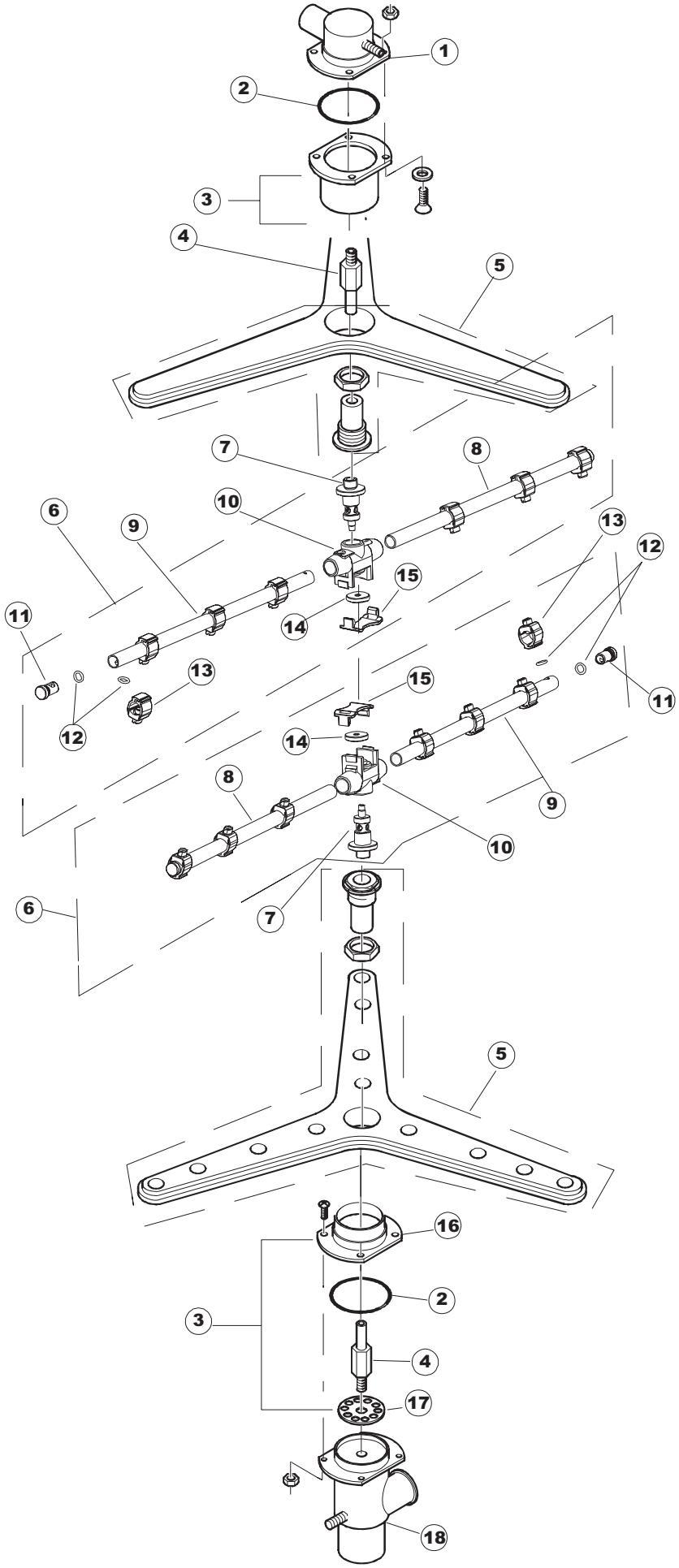
1
2
3
4
5
7
8
10
6
9
13
12
15
14
11
13
15
12
14
11
8
9
10
7
6
5
16
2
3
4
17
18

Pagina 6

1	4205901	RACCORDO LANCIA LAV.SUP.EW610H UNION, WASH.ARM UPP.EW610H VERBINDUNGSST., SPÜLARM OB.EW610H RACCORD RAMPE DE LAV.SUP.EW610H EMPALME LANZA LAV. SUP. EW610H	
2	926252	OR 4275 O-ring 4275 O-Ring 4275 OR 4275 OR 4275	
3	41064CP	CONTROFL.SUP.LANCIA LAV.U61/61H COUNTER-FLANGE, SUPP. FOR ARM-WASH U61/61H GEGENFLANSCH, OB. FÜR SPÜLLANZE U61/61H CONTRE-BRIDE SUP.RAMPE DE LAV.U61/61H CONTRABRIDA SUP. LANZA LAV. U61/61H	
4	42053	PERNO LANCIA LAV.INFER.U61 PIN, LOW.WASH. WASH-ARM U61 ZAPFEN, UNT.SPÜLLANZE U61 PIVOT RAMPE DE LAV.INFER.U61 PERNO LANZA LAV. INFER. U61	
5	929196	LANCIA DI LAV.TRIANGOLARE COMPL.U70.. WASH-ARM, WASH. - TRIANGULAR COMPL.U70.. SPÜLLANZE - DREIECK. KOMPL.U70.. RAMPE DE LAV.TRIANGULAIRE COMPL.U70.. LANZA DE LAV. TRIANGULAR COMPL. U70. .	
6	42211	LANCIA RISC.GIR.LP201/301 NM CPL. WASH-ARM, RINSE -.ROTAT.LP201/301 NM CPL. NACHSPÜLLANZE -DREH.LP201/301 NM CPL. RAMPE DE RINC.PIVOT.LP201/301 NM CPL. LANZA ENJUAGUE GIR. LP201/301 NM CPL.	
7	80380	PERNO PETTINE RISC.RIVER PIN, RINSE COMB RIVER ZAPFEN, NACHSPÜLKAMM RIVER PIVOT PEIGNE RINC.RIVER PERNO PEINE ENJUAGUE RIVER	
8	42208	BRACCIO DESTRO RISCIACQUO LANCIA GIREVOLE PER LAVAI RINSE ARM - RIGHT - FOR ROTATING WASH ARM FOR POT AN BRAS DROIT DE RINCAGE TOURNIQUET POUR LAVE-CASSER(NACHSPUELUNGSARM - RECHTS - FUER DREHWAS CHARM FI BRAZO DCHO. ENJUAGUE LANZA LP201/301	
9	42209	BRACCIO SINISTRO RISCIACQUO LANCIA GIREVOLE PER LAV/ RINSE ARM - LEFT - FOR ROTATING WASH ARM FOR POT AND NACHSPUELUNGSARM - SX- FUER DREHWASCHARM FUER KC BRAS GAUCHE DE RINCAGE TOURNIQUET POUR LEVE-CASSE BRAZO IZQDO. ENJUAGUE LANZA LP201/301	
10	80371	VEDI CODICE 129059 SEE CODE 129059 SIEHE SERIENN. 129059 VOIR CODE 129059 VER CODIGO 129059	
11	926132	TAPPO PL.X BRACCIO DI RISC.(DWT312) CAP, PLASTIC FOR WASH. ARM (DWT312) PFROPFEN, KUNST. FÜR NACHSPÜLARM (DWT312) BOUCHON PL.POUR BRAS DE RINC.(DWT312) TAPON PL. X BRAZO DE ENJUAGUE (DWT312)	
12	456060	OR 2025(CGR2025) O-ring 2025(CGR2025) O-Ring 2025(CGR2025) OR 2025(CGR2025) OR 2025(CGR2025)	
13	80373	SPRUZZATORE RISCIACQUO SPRAYER, RINSE SPRITZDÜSE, NACHSPÜLEN GICLEUR RINCAGE VER CODIGO 140028	
14	80365	GHIERA PERNO INOX RISC RING NUT, INOX RINSE PIN GEWINDERING, INOX ZAPFEN NACHSPÜLEN BAGUE PIVOT INOX RINC. VIROLA PERNO INOX ENJUAGUE	
15	80374	PONTICELLO RISC. + CORPO LANCIA 80371 BRACKET + ARM BODY 80371 BRUCHLEIN + KOERPER DES DREHWASCH PONTET + CORPS BRAS 80371 VER CODIGO 412030	

16	41064	VEDI CODICE C.41064CP SEE CODE C.41064CP SIEHE SERIENN. C.41064CP VOIR CODE C.41064CP CONTRABRIDA SUP. LANZA LAV. LP	
17	41185	PARZIALIZZATORE PL. DRAUGHT SHUTTER PL. DROSSELGERAT PL. ETRANGLEUR PL. PARCIALIZADOR PL.	
18	4206301	RACCORDO LANCIA LAV.INF.EW610.. UNION, WASH.ARM LOW.EW610.. VERBINDUNGSST., SPÜLARM UNTEN EW610.. RACCORD RAMPE DE LAV.INF.EW610.. EMPALME LANZA LAV. INF. EW610. .	

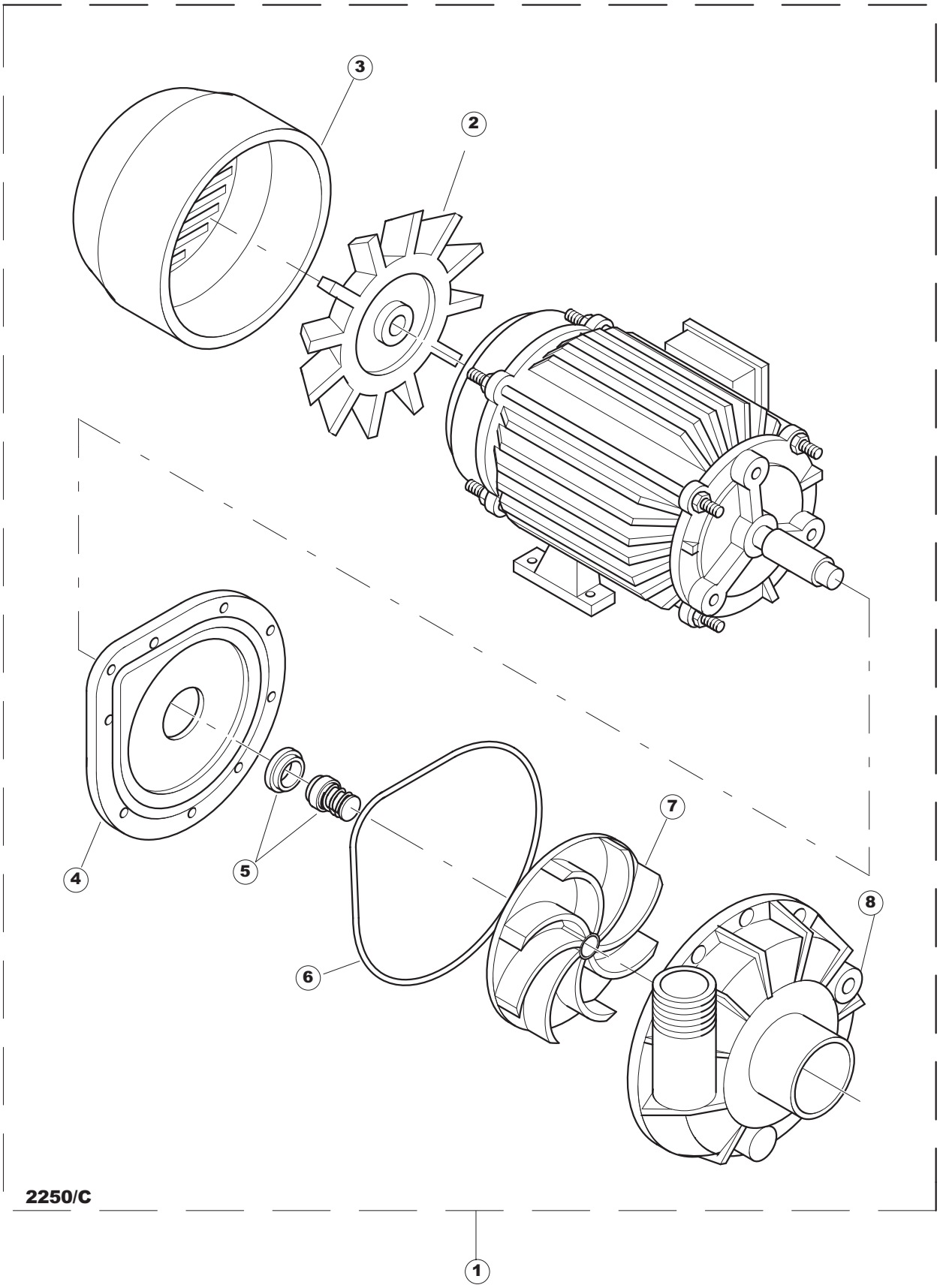
3
2
4
5
6
7
8
2250/C
1

Pagina 7

1	929174	POMPA 4HP 230/400-50 RUOT.(2250/C) PUMP 4HP 230/400-50 ROTAT.(2250/C) PUMPE 4HP 230/400-50 DREH.(2250/C) POMPE 4HP 230/400-50 PIV.(2250/C) BOMBA 4HP 230/400-50 RUOT. (2250/C)	
2	929189	VENTOLA ELETTROPOMPA 2250 FAN, MOTORPUMP 2250 GEBL., ELEKTROPUMPE 2250 VENT. ELECTROPOMPE 2250 VENTIL. ELECTROBOMBA 2250	
3	929188	COPRIVENTOLA ELETTROPOMPA 2250 FAN COVER, FOR MOTORPUMP 2250 GEBL.HAUBE, FÜR ELEKTROPUMPE 2250 COUVRE-VENT. ELECTROPOMPE 2250 CUBREVENTILADOR ELECTROBOMBA 2250	
4	929190	FLANGIA EL.POMPA 250 FLANGE, MOTORPUMP 250 FLANSCH, ELEKTROPUMPE 250 BRIDE ELECTROPOMPE 250 BRIDA ELECTROBOMBA 250	
5	929179	TENUTA MECCANICA PER POMPA 2250 SEAL, MECH. FOR PUMP 2250 DICHTUNG, MECH. FÜR PUMPE 2250 JOINT MECANIQUE POUR POMPE 2250 SELLO MECANICO PARA BOMBA 2250	
6	929180	OR POMPA 2250 O-ring PUMP 2250 O-Ring PUMPE 2250 OR POMPE 2250 OR BOMBA 2250	
7	929181	GIRANTE PER POMPA 2250/75-2250 PUMP IMPELLER 2250/75-2250 LAUFRAD, PUMPE 2250/75-2250 ROUE POUR POMPE 2250/75-2250 ROTOR PARA BOMBA 2250/75-2250	
8	929191	CORPO POMPA 2290/2250 PUMP SHELL, 2290/2250 PUMPENGEHAUSE, 2290/2250 CORPS POMPE 2290/2250 CUERPO BOMBA 2290/2250	