| | | | |
|---|---|---|---|
| Mod./Type: | **HT 50... - HT 51...**<br>**HT 52...DT - HT 53...DT** | cod./num. | 2532221.00 |
| | | data/date: | 08/06/2015 |

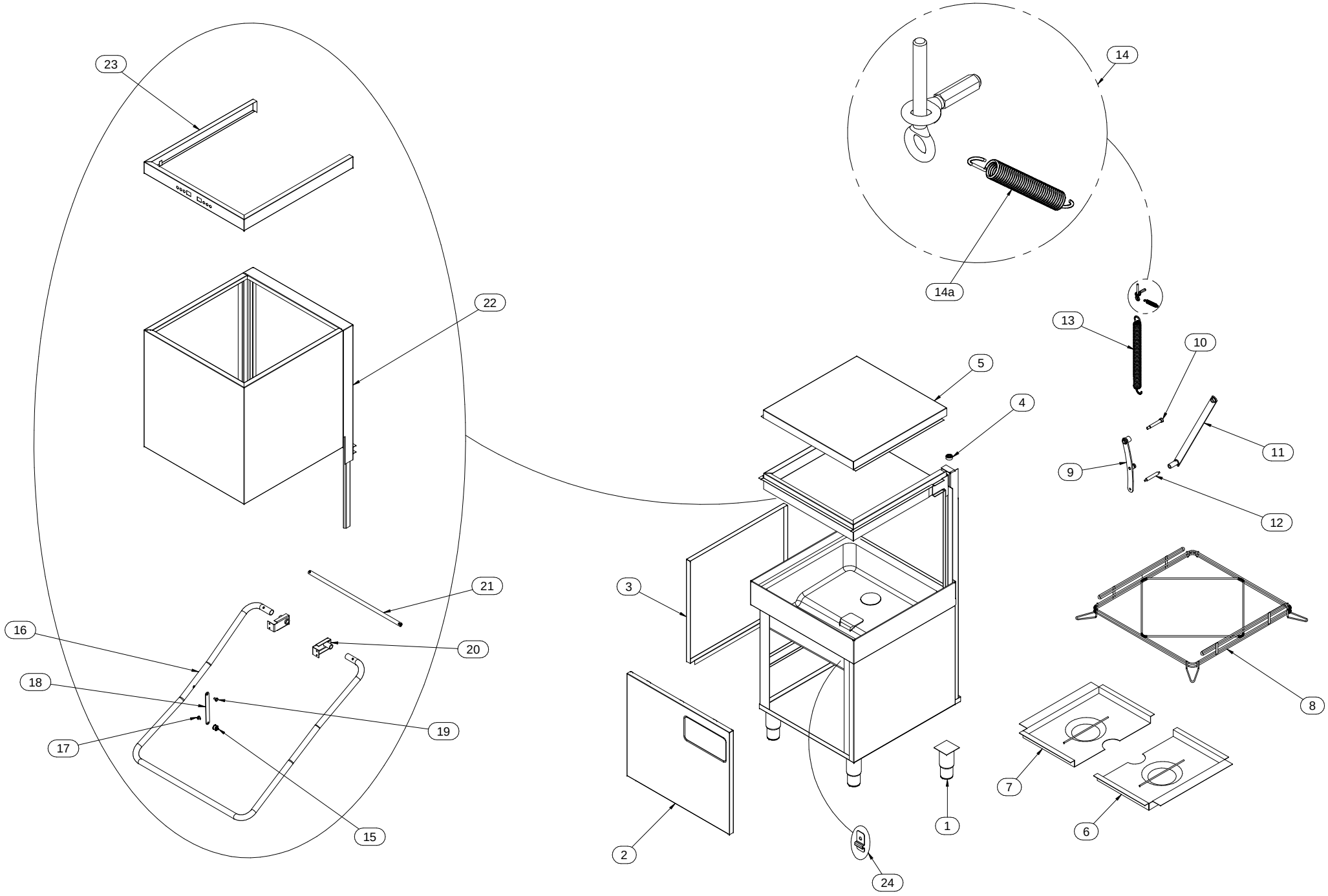

| Mod.: | HT 50… - HT 51…<br>HT 52…DT - HT 53…DT | | | cod. / num. 2532222.00<br>data / date 08/06/2015<br>rif. / ref. 2532221.00 | | RICAMBI CONSIGLIATI - RECOMMENDED SPARE PARTS - PIÈCES DÉTACHÉES RECOMMANDÉES - EMPFOHLENEN ERSATZTEILE | HT 50… | HT 51… | HT 52…DT | HT 53…DT | NOTE | |
|---|---|---|---|---|---|---|---|---|---|---|---|---|
| POS. | DESCRIZIONE | DESCRIPTION | DENOMINATION | BENENNUNG | COD. | | Q.ty | | | | | |
| 1 | PIEDINO | FOOT | PIED | STELLFUSS | 912.033.00 | | 4 | 4 | 4 | 4 | **FROM: 17.11.2012** | **TO: 18.11.2013** |
| | | | | | 912.090.14 | | 4 | 4 | 4 | 4 | **FROM: 18.11.2013** | **TO: …** |
| 2 | PANNELLO FRONTALE | FRONTAL PANEL | PANNEAU FRONTAL | FRONTPLATTE | 421.215.00 | | 1 | 1 | | | **FROM: 17.11.2012** | **TO: 10.12.2013** |
| | | | | | 421.215.13 | | 1 | 1 | | | **FROM: 11.12.2013** | **TO: …** |
| | | | | | 421.230.00 | | | | 1 | | | |
| | | | | | 421.227.00 | | | | | 1 | | |
| 3 | PANNELLO LATERALE | LATERAL PANEL | PANNEAU LATERAL | SEITLICHES PANEL | 421.197.00 | | 2 | 2 | 2 | 2 | | |
| 4 | FERMO CAPPOTTA | HOOD STOP | ARRÊT CAPOT | VERRIEGELUNG DES HAUBENSPÜLER | 451.077.00 | | 4 | 4 | 4 | 4 | | |
| 5 | COPERCHIO | LID | COUVERCLE | DECKEL | 421.208.00 | | 1 | 1 | 1 | | | |
| | | | | | 421.228.00 | | | | | 1 | | |
| 6 | FILTRO | FILTER | FILTER | FILTER | 411.076.00 | | - | 1 | 1 | 1 | | |
| 7 | FILTRO | FILTER | FILTER | FILTER | 411.077.00 | | - | 1 | 1 | 1 | | |
| 8 | SUPPORTO CESTI | SUPPORT FOR BASKET | SUPPORT POUR PANIER | KORBTRÄGER | 483.028.00 | | 1 | 1 | 1 | 1 | | |
| 9 | TIRANTE | TIE ROD | TIRANT | SPANNSTANGE | 412.289.00 | | 1 | 1 | 1 | 1 | **FROM: 17.11.2012** | **TO: 25.04.2014** |
| | | | | | 256.446.00 | | 1 | 1 | 1 | 1 | **FROM: 26.04.2014** | **TO: …** |
| 10 | VITE | SCREW | VIS | SCHRAUBE | 0313.10065.8 | | 1 | 1 | 1 | 1 | **FROM: 17.04.2014** | **TO: …** |
| 11 | PUNTONE | STRUT | CHEVRON | DRUCKSTAB | 412.290.00 | | 1 | 1 | 1 | 1 | **FROM: 17.11.2012** | **TO: 25.04.2014** |
| | | | | | 411.175.00 | | 1 | 1 | 1 | 1 | **FROM: 26.04.2014** | **TO: …** |
| 12 | PERNO SCORRIMENTO | SLIDING PIN | ÉPINGLE COULISSANTE | SCHIEBEBOLZEN | 441.076.00 | | 1 | 1 | 1 | 1 | | |
| 13 | MOLLA | SPRING | RESSORT | FEDER | 260.019.00 | | 1 | 1 | 1 | 1 | | |
| 14 | SICUREZZA | SAFETY | SÉCURITÉ | SICHERHEIT | 256.447.00 | | 1 | 1 | 1 | 1 | | |
| 14a | MOLLA | SPRING | RESSORT | FEDER | 260.020.00 | | 1 | 1 | 1 | 1 | | |
| 15 | BOCCOLA | PLAIN BEARING | PALIER LISSE | BUCHSE | 256.448.00 | | 2 | 2 | 2 | 2 | | |
| 16 | MANIGLIONE | HANDLE | POIGNÉE | GRIFF | 412.291.00 | | 1 | 1 | 1 | 1 | | |
| 17 | FISSAGGIO LAMINA | FOIL FIXING | FIXATION FEUILLE | BEFESTIGUNG DER FOLIE | 441.113.00 | | 2 | 2 | 2 | 2 | | |
| 18 | LAMINA | FOIL | FEUILLE | FOLIE | 423.205.00 | | 2 | 2 | 2 | 2 | | |
| 19 | FISSAGGIO LAMINA | FOIL FIXING | FIXATION FEUILLE | BEFESTIGUNG DER FOLIE | 441.122.00 | | 2 | 2 | 2 | 2 | | |
| 20 | SUPPORTO MANIGLIONE | HANDLE SUPPORT | SUPPORT POIGNÉE | HALTERUNG DES GRIFF | 411.167.00 | | 2 | 2 | 2 | 2 | | |
| 21 | TUBO POSTERIORE | REAR PIPE | TUYAU ARRIÈRE | HINTENEN ROHR | 431.109.00 | | 1 | 1 | 1 | 1 | | |
| 22 | CAPPOTTA | HOOD | CAPOT | HAUBENSPÜLER | 411.166.13 | | 1 | 1 | 1 | | | |
| | | | | | 256.449.13 | | | | | 1 | | |
| 23 | PANNELLO COMANDI | CONTROL PANEL | TABLEAU DE CONTRÔLE | KONTROL PANEL | 411.176.00 | | - | - | - | 1 | | |
| 24 | FISSAGGIO SONDA VASCA | TANK PROBE FIXING | FIXATION SONDE CUVE | BEFESTIGUNG DER PROBE AM TANK | 423.212.00 | | - | - | 1 | 1 | | |
| 25 | | | | | | | | | | | | |
| 26 | | | | | | | | | | | | |
| 27 | | | | | | | | | | | | |
| 28 | | | | | | | | | | | | |
| 29 | | | | | | | | | | | | |
| 30 | | | | | | | | | | | | |
| 31 | | | | | | | | | | | | |
| 32 | | | | | | | | | | | | |
| 33 | | | | | | | | | | | | |
| 34 | | | | | | | | | | | | |
| 35 | | | | | | | | | | | | |

| Mod./Type: | HT 50... | cod./num. | 2532228.00 |
|---|---|---|---|
| | HT 51... | data/date: | 08/06/2015 |

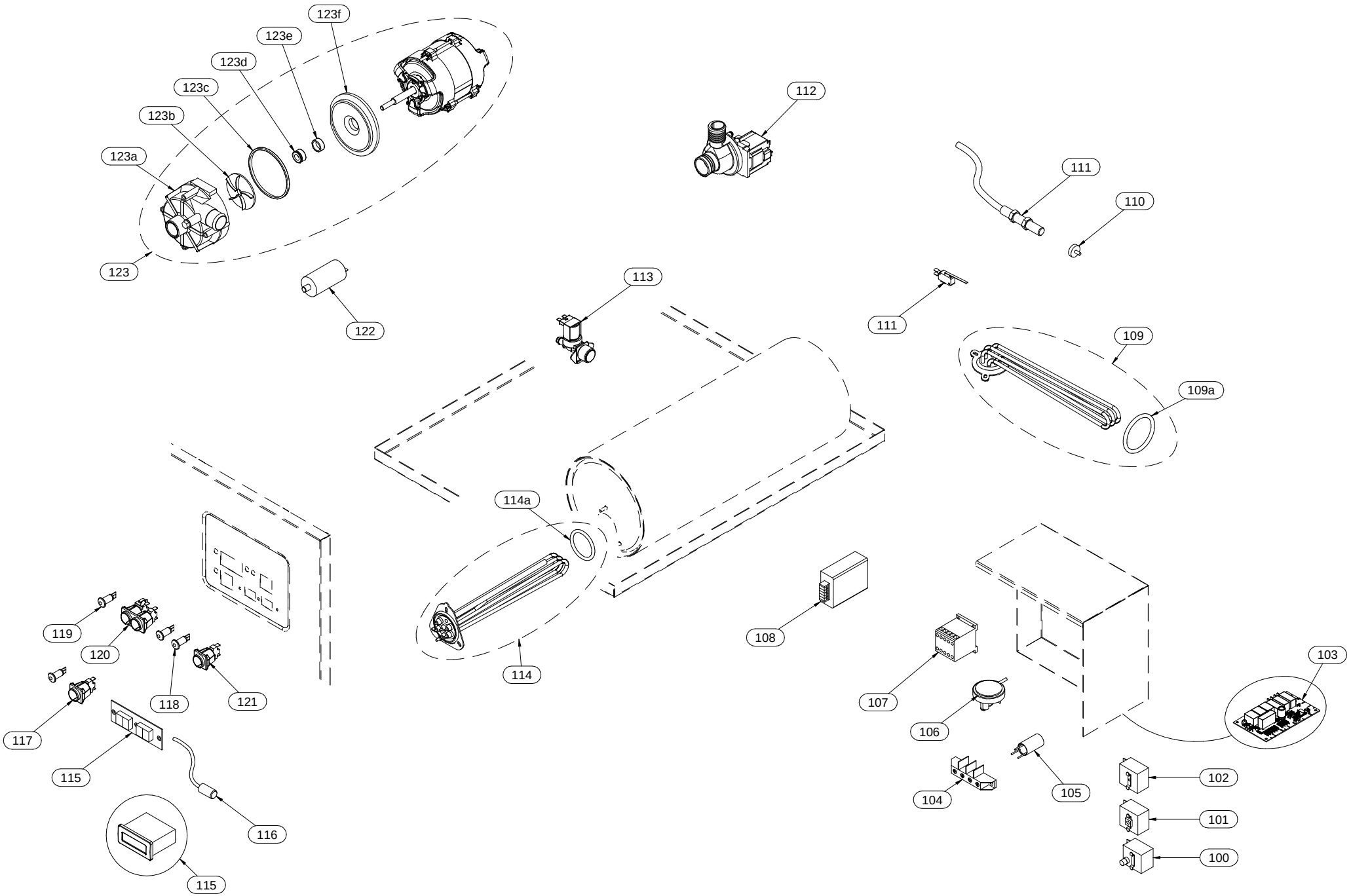

| Mod.: | HT 50…<br>HT 51… | | | cod. / num. 2532229.00<br>data / date 08/06/2015<br>rif. / ref. 2532228.00 | | RICAMBI CONSIGLIATI - RECOMMENDED SPARE PARTS - PIECES DETACHÉES RECOMMANDÉES - EMPFOHLENEN ERSATZTEILE | HT 50 | HT 50 A | HT 50 PS | HT 50 A PS | HT 51 | HT 51 A | HT 51 PS | HT 51 A PS | NOTE | |
|---|---|---|---|---|---|---|---|---|---|---|---|---|---|---|---|---|
| POS. | DESCRIZIONE | DESCRIPTION | DENOMINATION | BENENNUNG | COD. | | Q.ty | | | | | | | | | |
| 100 | TERMOSTATO SICUREZZA | SAFETY THERMOSTAT | THERMOSTAT DE SECURITÉ | SICHERHEITSTHERMOSTAT | 461.071.00 | * | 1 | 1 | 1 | 1 | 1 | 1 | 1 | 1 | | |
| 101 | TERMOSTATO BOILER | BOILER THERMOSTAT | THERMOSTAT CHAUFFE-EAU | BOILER -THERMOSTAT | 461.016.00 | * | 1 | 1 | 1 | 1 | 1 | 1 | 1 | 1 | | |
| 102 | TERMOSTATO VASCA | TUB THERMOSTAT | THERMOSTAT CUVE | TANKTHERMOSTAT | 461.015.00 | * | 1 | 1 | 1 | 1 | 1 | 1 | 1 | 1 | | |
| 103 | SCHEDA RELÉ | RELAY BOARD | CARTE DE RELAIS | RELAISPLATINE | 256.444.00 | * | 1 | 1 | 1 | 1 | 1 | 1 | 1 | 1 | FROM: 01.11.2012 | TO: 02.06.2013 |
| | | | | | 256.444.13 | * | 1 | 1 | 1 | 1 | 1 | 1 | 1 | 1 | FROM: 03.06.2013 | TO:... |
| 104 | MORSETTIERA | TERMINAL BOARD | BORNES | KLEMMENBRETT | 663.036.00 | | 1 | 1 | 1 | 1 | 1 | 1 | 1 | 1 | | |
| 105 | FILTRO ANTIDISTURBO | LIMITER FILTER | FILTRE DE BRUIT | ANTIJAMMING FILTER | 464.067.00 | | 3 | 3 | 3 | 3 | 3 | 3 | 3 | 3 | | |
| 106 | PRESSOSTATO | PRESSURE SWITCH | PRESSOSTAT | NIVEAUSCHALTER | 462.003.00 | * | 1 | 1 | 1 | 1 | 1 | 1 | 1 | 1 | | |
| 107 | CONTATTORE | CONTACTOR | CONTACTEUR | FERNSCHALTER | 461.021.00 | * | 2 | 2 | 2 | 2 | 2 | 2 | 2 | 2 | | |
| 108 | ALIMENTATORE | POWER SUPPLY | ALIMENTATEUR | NETZANSCHLUSSGERÄT | - | | - | - | - | - | - | - | - | - | FROM: 01.11.2012 | TO: 30.04.2014 |
| | | | | | 461.103.00 | * | - | - | - | - | 1 | 1 | 1 | 1 | FROM: 01.05.2015 | TO:... |
| 109 | RESISTENZA VASCA | SAFETY RELAY CONTACTS | RES. CUVE | TANKHEIZKORPER | 465.009.00 | * | 1 | 1 | 1 | 1 | 1 | 1 | 1 | 1 | | |
| 109a | GUARNIZIONE RESISTENZA | HEATING ELEMENT GASKET | JOINT DE LA RÉSISTENCE | WIDERSTAND-DICHTUNG | 0835.53374.1 | | 1 | 1 | 1 | 1 | 1 | 1 | 1 | 1 | | |
| 110 | MAGNETE | MAGNET | MAGNÉTO | MAGNET | - | | - | - | - | - | - | - | - | - | FROM: 01.11.2012 | TO: 30.04.2014 |
| | | | | | 684.007.00 | | 1 | 1 | 1 | 1 | 1 | 1 | 1 | 1 | FROM: 01.05.2015 | TO:... |
| 111 | MICROINTERRUTTORE | MICROSWITCH | MICROINTERRUPTEUR | SICHERUNGSSCHALTER | 412.075.00 | * | 1 | 1 | 1 | 1 | 1 | 1 | 1 | 1 | FROM: 01.11.2012 | TO: 30.04.2014 |
| | | | | | 461.106.00 | * | 1 | 1 | 1 | 1 | 1 | 1 | 1 | 1 | FROM: 01.05.2015 | TO:... |
| 112 | POMPA SCARICO | EXHAUST PUMP | ELECTROPOMPE DE VIDANGE | ABLAUF PUMPE | 464.037.00 | | - | - | 1 | 1 | - | - | 1 | 1 | | |
| 113 | ELETTROVALVOLA | SOLENOID VALVE | ELECTROVANNE | ELEKTROVENTIL | 462.000.00 | * | 1 | | 1 | | 1 | | 1 | | | |
| | | | | | 256.371.00 | * | | 1 | | 1 | | 1 | | 1 | | |
| 114 | RESISTENZA BOILER | BOILER RESISTANCE | RES. CHAUFFE- EAU | BOILERHEIZKORPER | 465.006.00 | | 1 | 1 | 1 | 1 | | | | | | |
| | | | | | 465.007.00 | | | | | | 1 | 1 | 1 | 1 | | |
| 114a | GUARNIZIONE RESISTENZA | HEATING ELEMENT GASKET | JOINT DE LA RÉSISTENCE | WIDERSTAND-DICHTUNG | 0835.53470.1 | | 1 | 1 | 1 | 1 | 1 | 1 | 1 | 1 | | |
| 115 | TERMOMETRO | THERMOMETER | TERMOMÈTRE | THERMOMETER | 461.050.00 | * | 2 | 2 | 2 | 2 | 2 | 2 | 2 | 2 | FROM: 01.11.2012 | TO: 31.11.2013 |
| | | | | | 461.101.00 | * | 1 | 1 | 1 | 1 | 1 | 1 | 1 | 1 | FROM: 01.12.2013 | TO:... |
| 116 | SONDE | PROBE ASSEMBLY | GROUPE SONDE | SONDEGRUPPE | - | | - | - | - | - | - | - | - | - | FROM: 01.11.2012 | TO: 31.11.2013 |
| | | | | | 461.102.00 | * | 2 | 2 | 2 | 2 | 2 | 2 | 2 | 2 | FROM: 01.12.2013 | TO:... |
| 117 | PULSANTE | BUTTON | BOUTON | TASTE | 461.092.00 | * | 1 | 1 | 1 | 1 | 1 | 1 | 1 | 1 | | |
| 118 | LAMPADA SPIA ARANCIO | ORANGE INDICATOR LIGHT | LAMPE TEMOIN ORANGE | ORANGE KONTROLLAMPE | 463.012.00 | | 2 | 3 | 2 | 3 | 2 | 3 | 2 | 3 | | |
| 119 | LAMPADA SPIA VERDE | GREEN INDICATOR LIGHT | LAMPE TEMOIN VERTE | GRUENE KONTROLLAMPE | 463.014.00 | | 1 | 1 | 1 | 1 | 1 | 1 | 1 | 1 | | |
| 120 | INTERRUTTORE DOPPIO | DOUBLE SWITCH | INTERRUPTEUR DOUBLE | DOPPELSCHALTER | 461.093.00 | * | 1 | 1 | 1 | 1 | 1 | 1 | 1 | 1 | | |
| 121 | INTERRUTTORE | SWITCH | INTERRUPTEUR | SCHALTER | 461.094.00 | * | | | | | 1 | 1 | 1 | 1 | | |
| | | | | | 461.098.00 | * | 1 | 1 | 1 | 1 | | | | | | |
| 122 | CONDENSATORE | CONDENSER | CONDENSEUR | KONDENSATOR | 464.110.00 | | 1 | 1 | 1 | 1 | 1 | 1 | 1 | 1 | | |
| 123 | ELETTROPOMPA | MOTOR PUMP | ELECTROPOMPE | ELEKTROPUMPE | 464.015.00 | | 1 | 1 | 1 | 1 | 1 | 1 | 1 | 1 | | |
| 123a | COCLEA | HELIX SCREW | PELLETEUSE HELICOÏDALE | FÖRDERSCHNECKE | 464.023.00 | | 1 | 1 | 1 | 1 | 1 | 1 | 1 | 1 | | |
| 123b | GIRANTE | IMPELLER | ROUE | IMPELLER | 464.021.00 | | 1 | 1 | 1 | 1 | 1 | 1 | 1 | 1 | | |
| 123c | GUARNIZIONE | SEAL | JOINT | DICHTUNG | 464.019.00 | | 1 | 1 | 1 | 1 | 1 | 1 | 1 | 1 | | |
| 123d | TENUTA ROTANTE | ROTATING SEAL | BOURRAGE DE POMPE | DREHDICHTUNG | 464.020.00 | | 1 | 1 | 1 | 1 | 1 | 1 | 1 | 1 | | |
| 123e | TENUTA FISSA | FIXED SEAL | ÉTANCHÉITÉ FIXE | FIXE DICHTUNG | 464.026.00 | | 1 | 1 | 1 | 1 | 1 | 1 | 1 | 1 | | |
| 123f | SUPPORTO COCLEA | HELIX SCREW SUPPORT | SUPPORT PELLETEUSE HELICOÏDALE | ABSTÜTZUNG FÜR FÖRDERSCHNECKE | 464.018.00 | | 1 | 1 | 1 | 1 | 1 | 1 | 1 | 1 | | |
| 124 | | | | | | | | | | | | | | | | |
| 125 | | | | | | | | | | | | | | | | |
| 126 | | | | | | | | | | | | | | | | |
| 127 | | | | | | | | | | | | | | | | |
| 128 | | | | | | | | | | | | | | | | |

Mod./Type: **DWD 45...**
**DW 5.... - DWD 51... - DWD 59... - HT 5...**

cod./num. 2532183.00

data/date: 25/05/2015

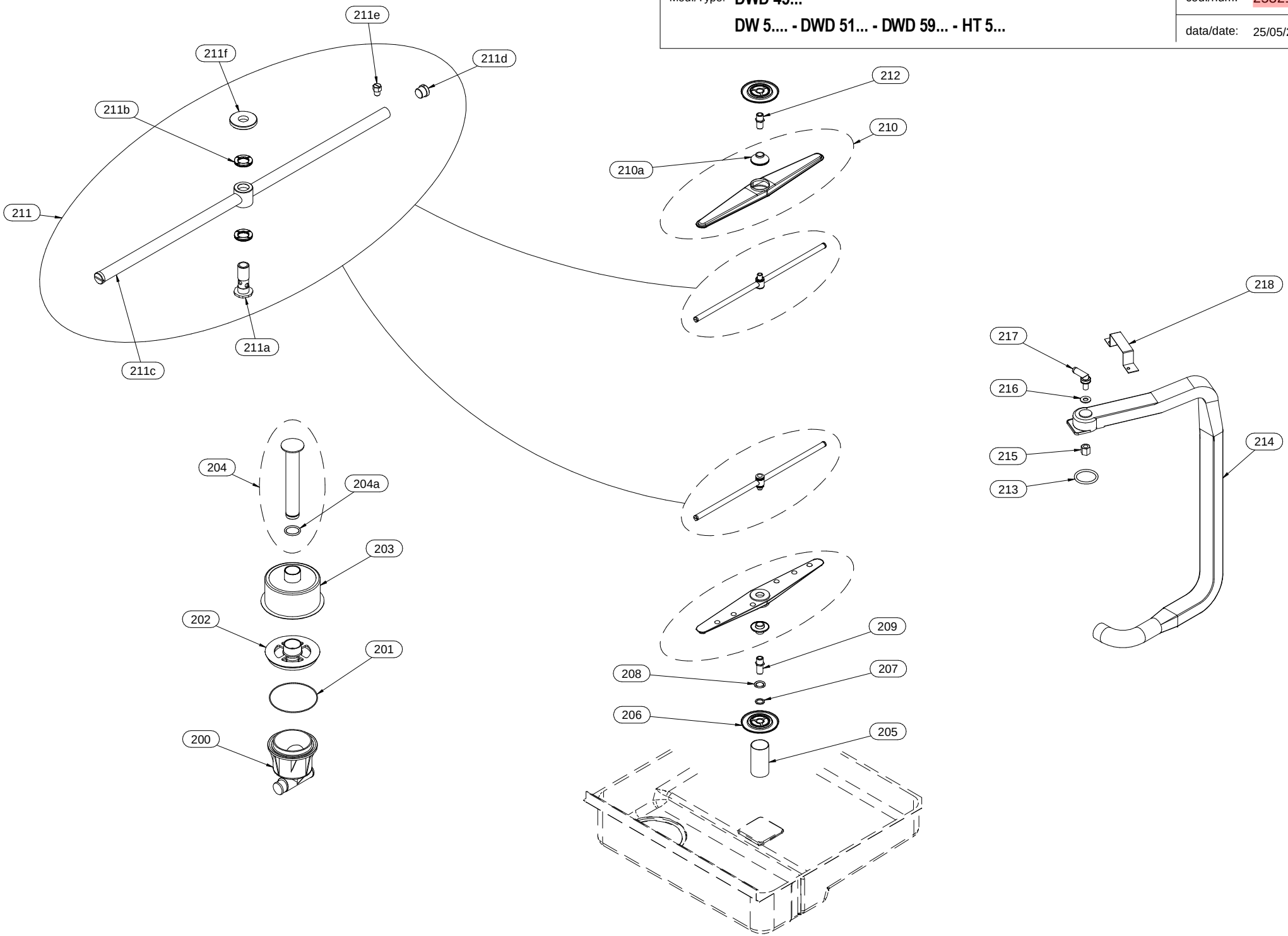

| Mod.: | DWD 45<br>DW 5... - DWD 51... - DWD 59... - HT 5... | | | cod. / num. 2532184.00<br>data / date 25/05/2015<br>rif. / ref. 2532183.00 | | RICAMBI CONSIGLIATI - RECOMMENDED SPARE PARTS - PIÈCES DÉTACHÉES RECOMMANDÉES - EMPFOHLENEN ERSATZTEILE | DWD 45... | DW 5... | DWD 51... | DWD 59... | HT 5... | NOTE |
|---|---|---|---|---|---|---|---|---|---|---|---|---|
| POS. | DESCRIZIONE | DESCRIPTION | DENOMINATION | BENENNUNG | COD. | | Q. ty | | | | | |
| **200** | SCARICO | DRAIN | VIDANGE | ABLAUF | 451.025.00 | | 1 | 1 | 1 | 1 | 1 | |
| **201** | GUARNIZIONE | WASHER | GUARNITURE | DICHTUNGSRING | 0835.35101.1 | | 1 | 1 | 1 | 1 | 1 | |
| **202** | GHIERA | FERRULE | VIROLE | NUTMUTTER | 451.022.14 | | 1 | 1 | 1 | 1 | 1 | |
| **203** | FILTRO SCARICO | EXHAUST FILTER | FILTRE D'ECHAPPEMENT | ABLAUFFILTER | 412.260.00 | | 1 | | | | | |
| | | | | | 412.055.14 | | | 1 | 1 | 1 | | |
| | | | | | 412.056.14 | | | | | | 1 | |
| **204** | TROPPOPIENO | OVERFLOW PIPE | TROP-PLEIN | ÜBERLAUF | 410.282.00 | | 1 | | | | | |
| | | | | | 410.283.00 | | | 1 | 1 | 1 | | |
| | | | | | 410.284.00 | | | | | | 1 | |
| 204a | GUARNIZIONE | WASHER | GUARNITURE | DICHTUNGSRING | 0835.26266.1 | * | 1 | 1 | 1 | 1 | 1 | |
| **205** | RACCORDO | CONNECTOR | RACCORD | ANSCHLUSS | 431.103.00 | | 1 | | | | | |
| | | | | | 431.052.00 | | | 1 | 1 | 1 | | |
| | | | | | 431.080.00 | | | | | | 1 | |
| **206** | PARZIALIZZATORE | SPLITTER | RONDELLE DE PARTIALISATION | ABZWEIGER | 451.132.00 | | 2 | | | | | |
| | | | | | 424.006.00 | | | 2 | 2 | 2 | 2 | |
| **207** | PARZIALIZZATORE | SPLITTER | RONDELLE DE PARTIALISATION | ABZWEIGER | 423.193.00 | | 1 | | | | | |
| | | | | | 423.058.00 | | | 1 | 1 | 1 | 1 | |
| **208** | GUARNIZIONE | WASHER | GUARNITURE | DICHTUNGSRING | 0835.17124.1 | | - | - | 1 | 1 | 1 | |
| **209** | PERNO LAVAGGIO INF. | LOWER WASHING PIVOT | GOUJON LAVAGE INFÉRIEUR | STIFT UNTERER SPÜLUNG | 441.059.00 | | 1 | | | | | |
| | | | | | 441.085.00 | | | 1 | | | | |
| | | | | | 412.033.00 | | | | 1 | 1 | | |
| | | | | | 412.079.00 | | | | | | 1 | |
| **210** | GIRANTE LAVAGGIO | WASH ARM | BRAS DE LAVAGE | WASCHARM | 256.375.00 | | 2 | | | | | |
| | | | | | 256.373.00 | | | 2 | 2 | 2 | | |
| | | | | | 256.374.00 | | | | | | 2 | |
| 210a | SUPPORTO GIRANTE | IMPELLER SUPPORT | SUPPORT BRAS DE LAVAGE | LAUFRADHALTERUNG | 451.066.00 | | 2 | | | | | |
| | | | | | 451.021.13 | | | 2 | 2 | 2 | 2 | |
| **211** | GIRANTE RISCIACQUO | RINSE IMPELLER | GROUPE BRAS RINÇAGE | AUSSPÜLUNGSARMGRUPPE | 412.275.00 | | 2 | | | | | |
| | | | | | 412.199.00 | | | 2 | 2 | 2 | | |
| | | | | | 412.200.00 | | | | | | 2 | |
| 211a | PERNO RISCIACQUO | RINSING PIN | GOUJON RINÇAGE | SPUELSTIFT LB LS | 441.057.00 | | 2 | 2 | 2 | 2 | 2 | |
| 211b | RONDELLA RISCIACQUO | RINSING GASKET | RONDELLE RINÇAGE | AUSSPÜLUNGSUNTERLEGSCHEIBE | 451.024.00 | | 4 | 4 | 4 | 4 | 4 | |
| 211c | GIRANTE RISCIACQUO | RINSE IMPELLER | GROUPE BRAS RINÇAGE | AUSSPÜLUNGSARMGRUPPE | 412.034.00 | | 2 | 2 | 2 | 2 | | |
| | | | | | 412.083.00 | | | | | | 2 | |
| 211d | TAPPO RISCIACQUO | RINSE PLUG | BOUCHON RINÇAGE | AUSSPÜLUNGSSTÖPSEL | 451.028.00 | | 4 | 4 | 4 | 4 | 4 | |
| 211e | UGELLO RISCIACQUO | RINSE INJECTOR | INJECTEUR DE RINCAGE | NACHSPUELDUESE | 441.040.00 | | 10 | 12 | 12 | 12 | 14 | |
| 211f | GHIERA | FERRULE | VIROLE | NUTMUTTER | 441.044.00 | | 2 | 2 | 2 | 2 | 2 | |
| **212** | PERNO LAVAGGIO SUP. | UPPER WASHING PIN | GOUPILLE LAVAGE SUPERIEURE | OBERER STIFT WASCHHVORGANG | 441.094.00 | | 1 | | | | | |
| | | | | | 441.041.00 | | | 1 | 1 | 1 | 1 | |
| **213** | GUARNIZIONE | WASHER | GUARNITURE | DICHTUNGSRING | 0835.35440.1 | | 1 | 1 | 1 | 1 | 1 | |
| **214** | TUBO MANDATA | DELIVERY PIPE | TUYAU DE REFOULEMENT | ZULEITUNGSROHR | 412.170.00 | | 1 | 1 | 1 | | | |
| | | | | | 412.171.00 | | | | | 1 | | |
| | | | | | 412.173.00 | | | | | | 1 | |
| **215** | DADO | NUT | ÈCROU | MUTTER | 441.045.00 | | 1 | 1 | 1 | 1 | 1 | |
| **216** | GUARNIZIONE | WASHER | GUARNITURE | DICHTUNGSRING | 0840.25122.0 | | 1 | 1 | 1 | 1 | 1 | |
| **217** | RACCORDO | CONNECTOR | RACCORD | ANSCHLUSS | 412.032.15 | | 1 | 1 | 1 | 1 | 1 | |
| **218** | FISSAGGIO | FIXING | FIXAGE | BEFESTIGUNG | 423.064.00 | | 1 | 1 | 1 | 1 | 1 | |
| **219** | | | | | | | | | | | | |
| **220** | | | | | | | | | | | | |
| **221** | | | | | | | | | | | | |
| **222** | | | | | | | | | | | | |
| **223** | | | | | | | | | | | | |
| **224** | | | | | | | | | | | | |

| | | | |
|---|---|---|---|
| Mod./Type: | **GW 35... - GW 4... - GWD 4... - DWD 45...**<br>**DW 5... - DWD 51... - DWD 59...** | cod./num. | 2532185.00 |
| | | data/date: | 22/06/2015 |

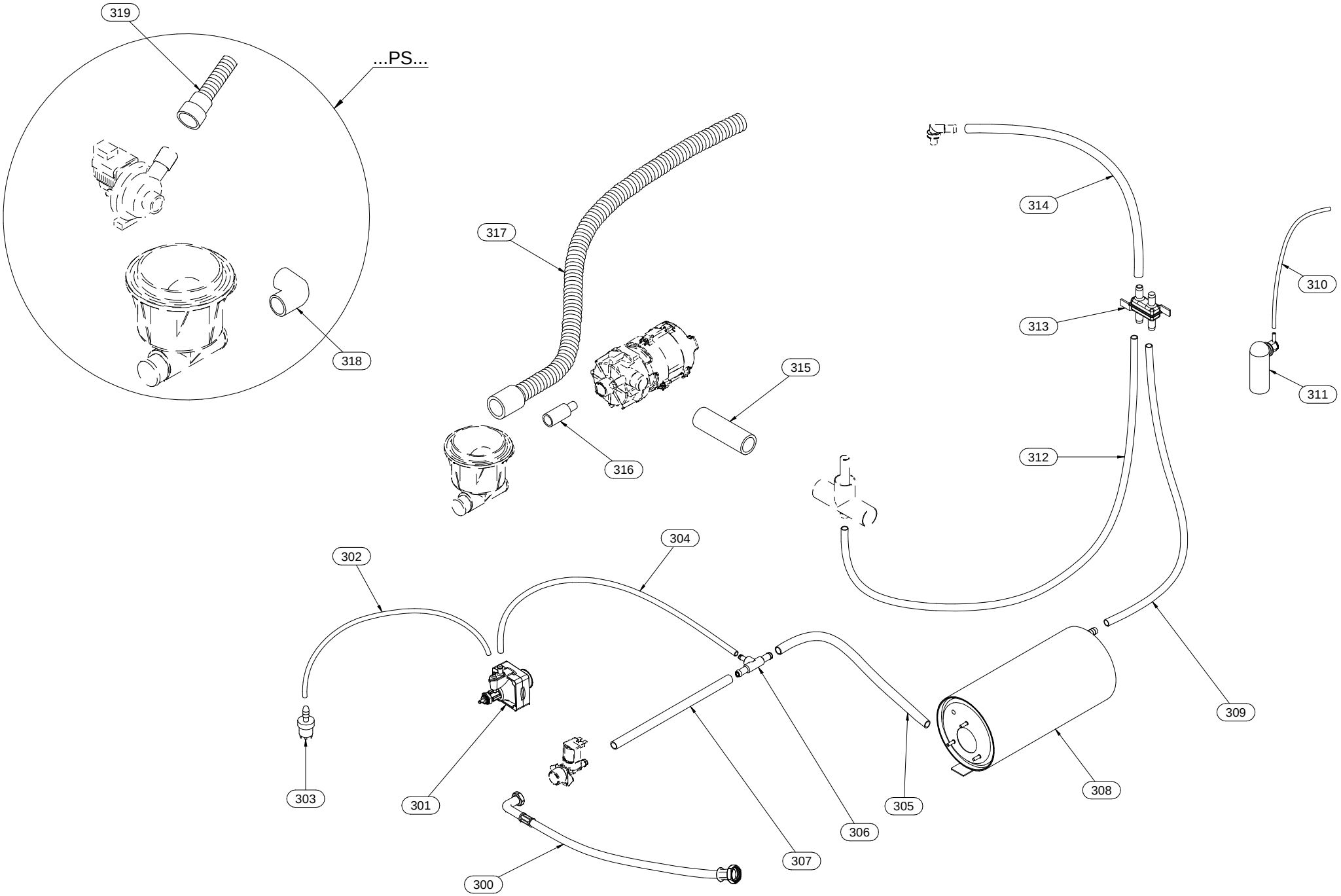

| Mod.: | HT 50… - HT 51….<br>HT 52…DT - HT 53…DT | | | cod. / num. 2532232.00<br>data / date 27/05/2015<br>rif. / ref. 2532185.00 | | RICAMBI CONSIGLIATI - RECOMMENDED SPARE PARTS - PIÈCES DÉTACHÉES RECOMMANDÉES - EMPFOHLENEN ERSATZTEILE | HT 50… - HT 51… | HT 50 PS… - HT 51 PS… | HT 52… - HT 53… | HT 52 PS… - HT53 PS… | NOTE |
|---|---|---|---|---|---|---|---|---|---|---|---|
| POS. | DESCRIZIONE | DESCRIPTION | DENOMINATION | BENENNUNG | COD. | | Q. ty | | | | |
| 300 | TUBO CARICO | INLET HOSE | TUYAU DE CHARGEMENT | BELASTUNG-ROHR | 452.033.00 | | 1 | 1 | 1 | 1 | |
| 301 | DOSATORE BRILLANTANTE | RINSE AID ADDITIVE DISPENSER | DOSEUR PRODUIT DE RINÇAGE | NACHSPUELMITTELGERAET | 471.011.00 | * | 1 | 1 | 1 | 1 | |
| 302 | TUBO 4x6 | PIPE D.4 X 6 | TUYAU 4X6 | ROHR 4x6 | 452.039.00 | | 1 | 1 | 1 | 1 | |
| 303 | FILTRO ASPIRAZIONE | SUCTION FILTER | FILTRE ASPIRATION | ANSAUGFILTER | 451.048.00 | | 1 | 1 | 1 | 1 | |
| 304 | TUBO 8x15 | PIPE 8x15 | TUYAU 8x15 | ROHR 8x15 | 452.144.00 | | 1 | 1 | 1 | 1 | |
| 305 | TUBO 12x19 | PIPE 12x19 | TUYAU 12x19 | ROHR 12x19 | 452.136.00 | | 1 | 1 | 1 | 1 | |
| 306 | RACCORDO A T | T-FITTING | RACCORD À T | T-STÜCK | 451.133.00 | | 1 | 1 | 1 | 1 | |
| 307 | TUBO 12x19 | PIPE 12x19 | TUYAU 12x19 | ROHR 12x19 | 452.148.00 | | 1 | 1 | 1 | 1 | |
| 308 | BOILER | RINSE TANK | GROUPE CHAUDIERE | BOILERGRUPPE | 410.280.00 | | 1 | 1 | | | |
| | | | | | 410.281.00 | | | | 1 | 1 | |
| 309 | TUBO 12x19 | PIPE 12x19 | TUYAU 12x19 | ROHR 12x19 | 452.142.00 | | 1 | 1 | | | |
| | | | | | 452.105.00 | | | | 1 | 1 | |
| 310 | TUBO 4x8 | PIPE 4x8 | TUYAU 4x8 | ROHR 4x8 | 452.114.00 | | 1 | 1 | 1 | 1 | |
| 311 | CAMPANA PRESSOSTATO | AIR TRAP | CLOCHE DU PRESSOSTAT | DRUCKWAECHTER | 451.083.00 | | 1 | 1 | 1 | 1 | |
| 312 | TUBO 12x19 | PIPE 12x19 | TUYAU 12x19 | ROHR 12x19 | 452.080.00 | | 1 | 1 | 1 | 1 | |
| 313 | RIPARTITORE | DISTRIBUTOR | RÉPARTITEUR | VERTEILER | 451.042.00 | | 1 | 1 | 1 | 1 | |
| 314 | TUBO 12x19 | PIPE 12x19 | TUYAU 12x19 | ROHR 12x19 | 452.080.00 | | 1 | 1 | 1 | 1 | |
| 315 | RACCORDO MANDATA | DELIVERY FITTING | RACCORD DE REFOULEMENT | ZULEITUNGSANSCHLUSS | 452.031.00 | | 1 | 1 | | | |
| | | | | | 452.074.00 | | | | 1 | 1 | |
| 316 | RACCORDO ASPIRAZIONE | SUCTION FITTING | RACCORD ASPIRATION | ABSAUGANSCHLUSS | 452.030.00 | | 1 | 1 | | | |
| | | | | | 452.095.00 | | | | 1 | 1 | |
| 317 | TUBO SCARICO | EXHAUST PIPE | TUYAU D'ÉCHAPPEMENT | ABLAUFROHR | 452.034.00 | | 1 | - | 1 | - | |
| 318 | RACCORDO SCARICO | DISCHARGE CONNECTION | COUPLEUR DE VIDANGE | ABLAUFANSCHLUSS | 452.067.00 | | - | 1 | - | 1 | |
| 319 | TUBO SCARICO | EXHAUST PIPE | TUYAU D'ÉCHAPPEMENT | ABLAUFROHR | 452.042.00 | | - | 1 | - | 1 | |
| 320 | | | | | | | | | | | |
| 321 | | | | | | | | | | | |
| 322 | | | | | | | | | | | |
| 323 | | | | | | | | | | | |
| 324 | | | | | | | | | | | |
| 325 | | | | | | | | | | | |
| 326 | | | | | | | | | | | |
| 327 | | | | | | | | | | | |
| 328 | | | | | | | | | | | |
| 329 | | | | | | | | | | | |
| 330 | | | | | | | | | | | |
| 331 | | | | | | | | | | | |
| 332 | | | | | | | | | | | |
| 333 | | | | | | | | | | | |
| 334 | | | | | | | | | | | |
| 335 | | | | | | | | | | | |