DESPIECE TECNICO

Barbacoa
Charcoal
Charcoal
Lavastein Grill
Grill Pietra Lavica

GAMA 700

Modelos:

BG7-05
BG7-10
BG7-05 I
BG7-10 I

Junio 2008 June

Revisado Mayo 2010

Fagor Industrial

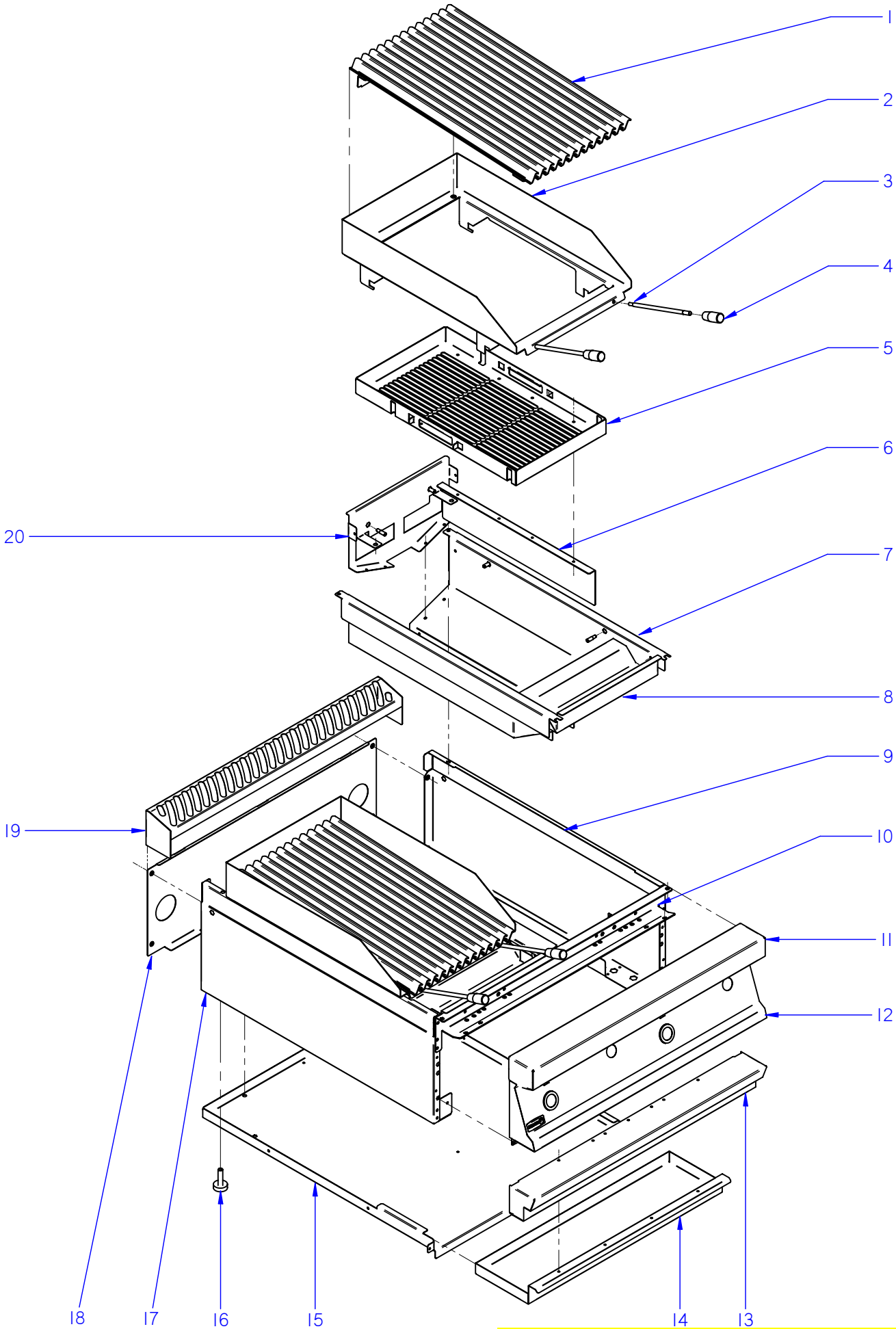

ITEM MARCADO EN COLOR = REPUESTO RECOMENDADO
COLOURED ITEM = RECOMMENDED SPARE PART

N plano	Firma	Fecha	Aparato	MUEBLE	Lamina	
C-2080		2008-06	BARBACOA BG7-05 / BG7-10		1	Fagor Industrial S.Coop. FAGOR Oñate

MOD.	BARBACOA	ZONA	MUEBLE	PLANO	C-2080

ITEM	CODIGO	DENOMINACION	TEXTO	BG7-05	BG7-10	BG7-05 I	BG7-10 I				NOTAS
1	T035464000	PARRILLA DE FUNDICION G700	CAST IRON GRILLE G700	1	2	_	_				
1	H125407000	PARRILLA DE INOXIDABLE G700	STAINLESS STEEL GRILLE G700	_	_	1	2				
2	H125416000	CONJUNTO SOPORTE PARRILLA	GRILLE SUPPORT UNIT	1	2	1	2				
	Q221342000	REMACHE EXAGONAL M5	HEXAGONAL RIVET M5	1	2	1	2				
	Q152004000	TORNILLO APLAST. M5X13 A 304	MUSHROOM HEAD BOLT M5X13	1	2	1	2				
	Q151336000	TORNILLO SOPORTE GUIAS	GUIDE SUPPORT BOLT	4	8	4	8				
3	H125417000	ASA BARBACOA 750 Q	BARBECUE HANDLE 750 Q	2	4	2	4				
	Q162040000	TUERCA EXAGONAL M6	HEXAGONAL NUT M6	4	8	4	8				
4	T065460000	EMPUÑADURA	HANDLE	2	4	2	4				
5	H122605000	REJILLA INOX. COMPLETA G.700	COMPLETE INOX. GRILLE G.700	1	2	1	2				
	Q412002000	REMACHE AVINOX Ø4X10MM	RIVET AVINOX Ø4x10MM	8	16	8	16				
6	H122614000	LATERAL CAJA	SIDE BOX	2	4	2	4				
7	H122603000	CAJA INTERIOR COMPLETA	COMPLETE INTERIOR BOX	1	2	1	2				
	Q412002000	REMACHE AVINOX Ø4X10MM	RIVET AVINOX Ø4x10MM	4	8	4	8				
	H125418000	TORNILLO SIST. ELEVACION	ELEVATION SYST. BOLT	4	8	4	8				
	N100322000	COJINETE AUTOLUBRICADO	SELF LUBRICATED BEARING	4	8	4	8				
8	H122602000	ANTERIOR INTERIOR MESA	FRONT INTERIOR BENCH	1	2	1	2				
9	H122802000	PANEL LATERAL SUP. DCHO. G700	RIGHT SUP. SIDE PANEL G700	1	1	1	1				
	Q221342000	REMACHE EXAGONAL M5	HEXAGONAL RIVET M5	5	5	5	5				
	Q221343000	REMACHE EXAGONAL M6	HEXAGONAL RIVET M6	5	5	5	5				
	X010503000	CIERRE MUELLE	LOCK SPRING	1	1	1	1				
10	H602602000	ESCUADRA AMARRE ANTER. 1/2 M	FRONT FASTENING BRACKET 1/2	1	_	1	_				
10	H602603000	ESCUADRA AMARRE ANTER. 1 M	FRONT FASTENING BRACKET 1 I	_	1	_	1				
	Q221342000	REMACHE EXAGONAL M5	HEXAGONAL RIVET M5	6	6	6	6				
11	H125403000	ANTERIOR MESA 1/2 M G-700	FRONT BENCH 1/2M G-700	1	_	1	_				
11	H125409000	ANTERIOR MESA 1 M G-700	FRONT BENCH 1M G-700	_	1	_	1				
	Q152004000	TORNIL. APLASTADO M5X13 A 304	FLAT HEADED SCREW M5x13 A 3	2	2	2	2				

MOD.	BARBACOA	ZONA	MUEBLE	PLANO	C-2080

ITEM	CODIGO	DENOMINACION	TEXTO	BG7-05	BG7-10	BG7-05 I	BG7-10 I				NOTAS
12	H122803000	PANEL PORTAMANDOS BG7-05Q	CONTROL HOLDER PANEL BG7-(	1	_	1	_				
12	H122807000	PANEL PORTAMANDOS BG7-10Q	CONTROL HOLDER PANEL BG7-1	_	1	_	1				
	Q152004000	TORNIL. APLASTADO M5X13 A 304	FLAT HEADED SCREW M5x13 A 3	4	4	4	4				
	Q221343000	REMACHE EXAGONAL M6	HEXAGONAL RIVET M6	2	2	2	2				
	U912805000	ESCUDO FAGOR G700	FAGOR EMBLEM G700	1	1	1	1				
	Q221023000	CLIP SUJECIÓN RÁPIDA Ø5	RAPID CONNECT CLIP Ø5	2	2	2	2				
13	H122815000	ZOCALO ASA 1/2 MÓDULO	SKIRTING ASA 1/2 MODULE	1	_	1	_				
13	H122805000	ZOCALO ASA 1 MÓDULO	SKIRTING ASA 1 MODULE	_	1	_	1				
	Q012031000	TORNILLO EXAGONAL M5X10 A.304	HEXAGONAL BOLT M5X10 A.304	2	2	2	2				
	Q302022000	ARANDELA 16X6X1.2 A.304	WASHER 16X6X1.2 A.304	2	2	2	2				
14	H122608000	BANDEJA RECOGEGRASAS	GREASE COLLECTION TRAY	1	_	1	_				
14	H120301000	BANDEJA RECOGEGRASAS	GREASE COLLECTION TRAY	_	1	_	1				
15	H122607000	BASE	BASE	1	_	1	_				
15	H122606000	BASE	BASE	_	1	_	1				
	Q419005000	REMACHE 4X8 ALMG3 / ALUMINIO	RIVET 4X8 ALMG3 / ALUMINIUM	4	4	4	4				
	Q221342000	REMACHE EXAGONAL M5	HEXAGONAL RIVET M5	1	3	1	3				
16	Z200107000	PATA REGULABLE	ADJUSTABLE LEG	4	4	4	4				
	Q221345000	REMACHE EXAGONAL M10	HEXAGONAL RIVET M10	4	4	4	4				
17	H122801000	PANEL LATERAL SUP. IZDO. G700	LEFT UPPER SIDE PANEL G700	1	1	1	1				
	Q221342000	REMACHE EXAGONAL M5	HEXAGONAL RIVET M5	5	5	5	5				
	Q221343000	REMACHE EXAGONAL M6	HEXAGONAL RIVET M6	5	5	5	5				
	X010503000	CIERRE MUELLE	LOCK SPRING	1	1	1	1				
	Q221343000	REMACHE EXAGONAL M6	HEXAGONAL RIVET M6	5	5	5	5				
18	H602804000	PANEL POSTERI. SUP. G700 1/2M	SUP. REAR PANEL G700 1/2M	1	_	1	_				
18	H602808000	PANEL POSTERIOR SUP. G700 1M	SUP REAR PANEL G700 1M	_	1	_	1				
	Q419005000	REMACHE 4X8 ALMG3 / ALUMINIO	RIVET 4X8 ALMG3 / ALUMINIUM	4	4	4	4				
	X010503000	CIERRE MUELLE	LOCK SPRING	3	3	3	3				
	Q419007000	REMACHE TUBULAR C/V D3.2X6	TUBULAR RIVET C/V D3.2X6	6	6	6	6				
19	H125404000	EMBELLECEDOR POSTER. 1/2 M	REAR TRIM. 1/2 M	1	_	1	_				
19	S565401000	EMBELLECEDOR POSTERIOR 1M	REAR TRIM 1M	_	1	_	1				

MOD.	BARBACOA	ZONA	MUEBLE	PLANO	C-2080

ITEM	CODIGO	DENOMINACION	TEXTO	BG7-05	BG7-10	BG7-05 I	BG7-10 I				NOTAS
20	H122604000	POSTERIOR INTERIOR MESA 1/2M	REAR INTERIOR BENCH 1/2M	1	2	1	2				
	Q221342000	REMACHE EXAGONAL M5	HEXAGONAL RIVET M5	2	4	2	4				
	Q221343000	REMACHE EXAGONAL M6	HEXAGONAL RIVET M6	2	4	2	4				

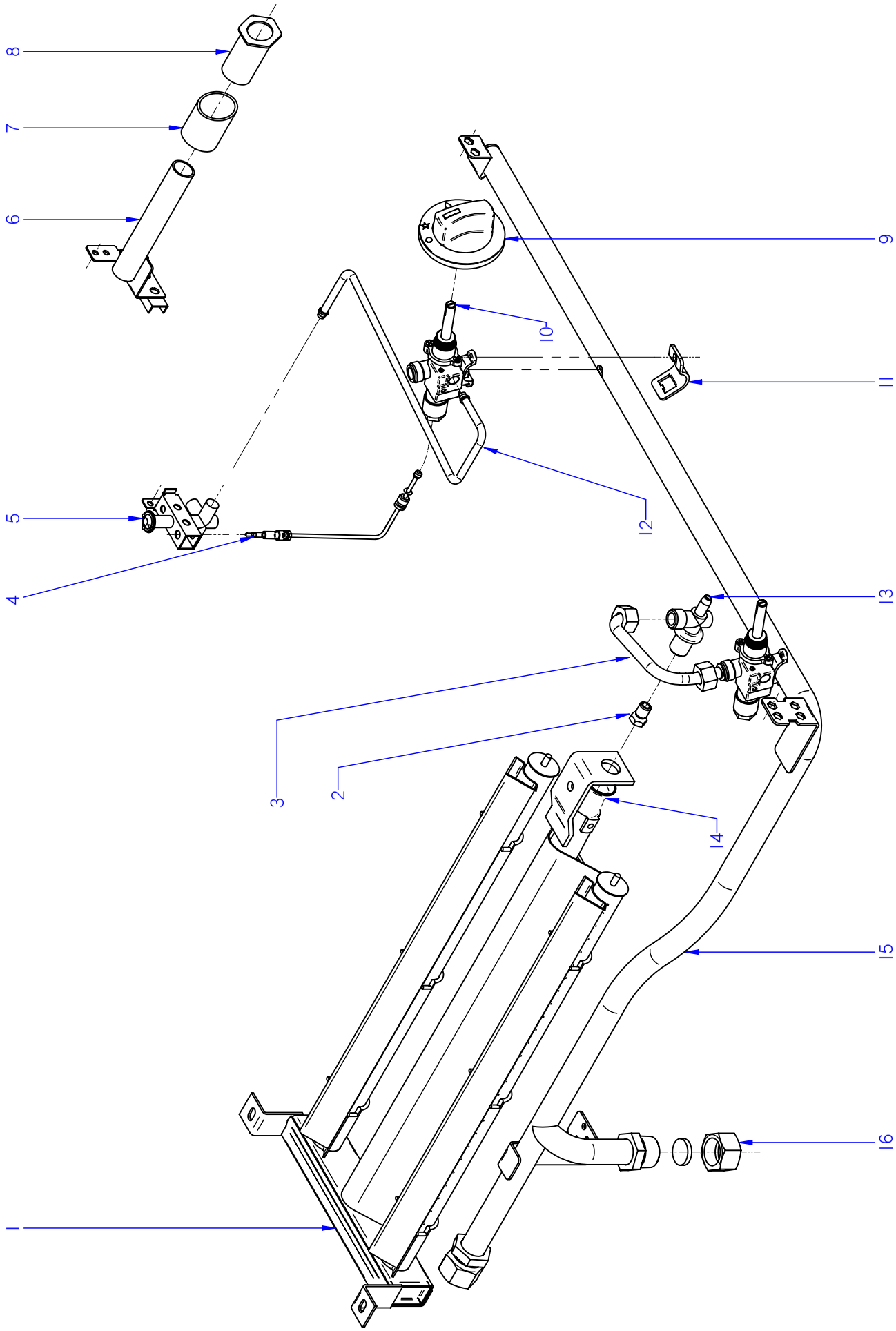

ITEM MARCADO EN COLOR = REPUESTO RECOMENDADO
COLOURED ITEM = RECOMMENDED SPARE PART

N plano	Firma	Fecha	Aparato	Lamina	
C-2081		2008-06	PARTE FUNCIONAL BARBACOA BG7-05 / BG7-10	2	Fagor Industrial S.Coop. Oñate

MOD.	BARBACOA	ZONA	PARTE FUNCIONAL	PLANO	C-2081

ITEM	CODIGO	DENOMINACION	TEXTO	BG7-05	BG7-10						NOTAS
1	T035702000	QUEMADOR BARBACOA GAMA 700	BARBECUE BURNER RANGE 700	1	2						
	Q012031000	TORNILLO EXAGONAL M5X10 A.304	HEXAGONAL BOLT M5X10 A.304	2	4						
	Q302022000	ARANDELA Ø16X6X1.2 A.304	WASHER 16X6X1.2 A.304	2	4						
2	O631000000	TOBERA DE Ø 1,40 B.P.	NOZZLE Ø 1.40 B.P.	1	2						
2	U112402000	TOBERA DE Ø 2,10 G.N.	NOZZLE Ø 2.10 G.N.	1	2						
3	H125009000	CONDUCCION QUEMADOR COMP.	COMP. BURNER PIPE	1	2						
4	U222130000	TERMOPAR L=600	THERMOCOUPLE L=600	1	2						
5	U322118000	PILOTO COMPLETO 100.062	COMPLETE PILOT LIGHT 100.062	1	2						
	U442137000	INYECTOR Ø 0.4 GN	INJECTOR Ø 0.4 GN.	1	2						
	Q012031000	TORNILLO EXAGONAL M5X10 A.304	HEXAGONAL BOLT M5X10 A.304	2	4						
6	H122814000	TUBO ENCENDIDO COMPLETO	COMPLETE IGNITION PIPE	1	2						
	Q306027000	ARANDELA PLANA 33.8X27X1.5	FLAT WASHER 33.8X27X1.5	1	2						
	Q221324000	TUERCA 3/4 GAS	NUT 3/4 GAS	1	2						
	Q221343000	REMACHE EXAGONAL M6	HEXAGONAL RIVET M6	4	4						
7	R065025000	DISTANCIADOR	SPACER	1	2						
8	R042822000	EMBELLECEDOR TUBO ENCEND.	IGNITION PIPE TRIM	1	2						
9	H122101000	BOTON DE MANDO D8 G700	CONTROL BUTTON Ø8 G700	1	2						
10	H122103000	GRIFO 18700 BY-PASS 1,1	TAP 18700 BY-PASS 1.1	1	2						
11	U912104000	BRIDA AMARRE GRIFO 1/2"	TAP FASTENING FLANGE 1/2"	1	2						
	Q122032000	TORNILLO ALLEN M.5x15	ALLEN HEAD SCREW M.5x15	2	4						
12	H125013000	TUBO PILOTO BG 750 Q	PILOT PIPE BG 750 Q	1	2						
13	U915014000	PORTATOBERAS	NOZZLE HOLDER	1	2						
	Q153002000	TORNILLO TAPON	CAP BOLT	1	2						
	Q306062000	ARANDELA Ø13,9X10,33x1,5	WASHER Ø13.9X10.33x1.5	2	4						
14	U325707000	REGULADOR DE AIRE	AIR REGULATOR	1	2						
	Q012031000	TORNILLO EXAGONAL M5X10 A.304	HEXAGONAL BOLT M5X10 A.304	1	2						
15	H125002000	DISTRIBUIDOR GENERAL COMPL.	COMPL. GENERAL DISTRIBUTOR	1	_						
15	H125006000	DISTRIBUIDOR GENERAL COMPL.	COMPL. GENERAL DISTRIBUTOR	_	1						
16	U635008000	TUERCA CIEGA 3/4	BLIND NUT 3/4	1	1						
	Q306051000	ARANDELA TAPON Ø 23.5x3	CAP WASHER Ø 23.5x3	1	1						

MOD.	BARBACOA	ZONA	VARIOS	PLANO	

ITEM	CODIGO	DENOMINACION	TEXTO	BG7-05	BG7-10	BG7-05 A	BG7-10 A				NOTAS
	H016502000	FOLLETO DE INSTRUCCIONES BG	INSTRUCTION LEAFLET BG	1	1	_	_				ELIMINDO 14.05.09
	H016518000	FOLLETO DE INSTRUCCIONES BG	INSTRUCTION LEAFLET BG	1	1	_	_				INTRODUCIDO 14.05.09
	H016515000	FOLLETO DE INSTRUCCION. BG-A	INSTRUCTION LEAFLET BG-A	_	_	1	1				

MOD.	BARBACOA	ZONA	PIEZAS ESPECIFICAS PARA LOS DISTINTOS GASES	PLANO	C-2081

ITEM	CODIGO	DENOMINACION	TEXTO	BG7-05	BG7-10						NOTAS
		BUTANO PROPANO	**BUTANE PROPANE**								
2	O631000000	TOBERA DE Ø 1,40 B.P.	NOZZLE Ø 1.40 B.P.	1	2						
S/Nº	U136501000	INDICADOR BUTANO-PROPANO	INDICATOR BUTANE-PROPANE	1	1						
		GAS NATURAL	**NATURAL GAS**								
5	U442137000	INYECTOR Ø 0.4 GN	INJECTOR Ø 0.4 GN.	1	2						
2	U112402000	TOBERA DE Ø 2,10 G.N.	NOZZLE Ø 2.10 G.N.	1	2						
S/Nº	U134402000	INDICADOR GAS-NATURAL	INDICATOR GAS-NATURAL	1	1						
		GAS VILLA	**TOWN GAS**								
2	U842400000	TOBERA DE Ø 4,40 G.V.	NOZZLE Ø 4.40 G.V.	1	2						
S/Nº	U134310000	INDICADOR GAS-VILLA	INDICATOR TOWN -GAS	1	1						

MOD.	BARBACOA	ZONA	PIEZAS ESPECIFICAS PARA LA VERSION AUSTRALIA	PLANO	C-2080-81

ITEM	CODIGO	DENOMINACION		BG7-05 A	BG7-10 A							
		PIEZAS QUE SE ELIMINAN	**PARTS WHICH HAVE BEEN SUPP**									
12	H122803000	PANEL PORTAMANDOS BG7-05Q	CONTROL HOLDER PANEL BG7-0	1	_							PLANO C-2080
12	H122807000	PANEL PORTAMANDOS BG7-10Q	CONTROL HOLDER PANEL BG7-1	_	1							PLANO C-2080
2	U112402000	TOBERA DE Ø 2,10 G.N.	NOZZLE Ø 2.10 G.N.	1	2							PLANO C-2081
		PIEZAS QUE SE INTRODUCEN	**PARTS WHICH HAVE BEEN INTR**									
12	H122818000	PANEL PORTAMANDOS BG7-05 A	CONTROL HOLDER PANEL BG7-0	1	_							PLANO C-2080
12	H122820000	PANEL PORTAMANDOS BG7-10 A	CONTROL HOLDER PANEL BG7-1	_	1							PLANO C-2080
2	S202401000	TOBERA DE Ø 2,60	NOZZLE Ø 2.60	1	2							PLANO C-2081
S/Nº	S113034000	PIEZOELECTRICO	PIEZOELECTRIC	1	2							
S/Nº	X022131000	BUJIA	SPARK PLUG	1	2							
S/Nº	R613030000	CABLE BUJIA	SPARK PLUG CABLE	1	2							
S/Nº	U333003000	CABLE MASA ENCENDEDOR	LIGHTER EARTH CABLE	1	2							