SAGI - BASI REFRIGERATE
KM1C-2 - 15-12-1999 »

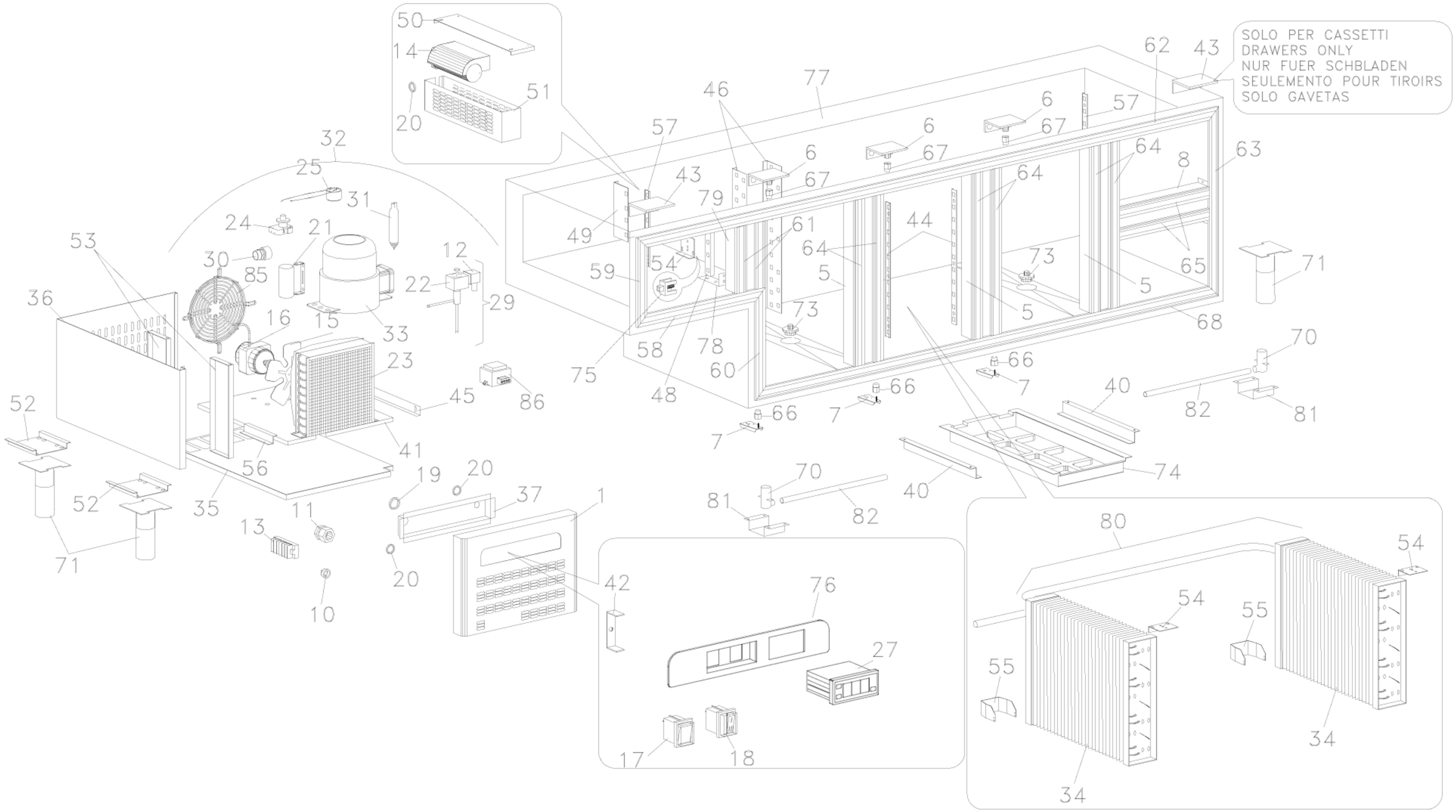

Modello Typ Model Modele Modelo

		KM1A KM1A/X KM1A/A	KM1A/2 KM1A/2X KM1A/2A	KM1A/4 KM1A/4X KM1A/4A	KM1A/11 KM1A/11X KM1A/11A	KM1B KM1B/X KM1B/A	KM1B/2 KM1B/2X KM1B/2A	KM1B/4 KM1B/4X KM1B/4A	KM1B/6 KM1B/6X KM1B/6A	KM1B/11 KM1B/11X KM1B/11A
Num. Cassetti										
Schublad	1/2	---	1	2	---	---	1	2	3	---
Drawers	1/3	---	---	---	1	---	---	---	---	1
Tiroirs	2/3	---	---	---	1	---	---	---	---	1
Gabetas	1/2 K	1	2	3	1	1	2	3	4	1

		KM1B/22 KM1B/22X KM1B/22A	KM1C KM1C/X KM1C/A	KM1C/2 KM1C/2X KM1C/2A	KM1C/4 KM1C/4X KM1C/4A	KM1C/6 KM1C/6X KM1C/6A	KM1C/8 KM1C/8X KM1C/8A	KM1C/11 KM1C/11X KM1C/11A
Num. Cassetti								
Schublad	1/2	---	---	1	2	3	4	---
Drawers	1/3	2	---	---	---	---	---	1
Tiroirs	2/3	2	---	---	---	---	---	1
Gabetas	1/2 K	1	1	2	3	4	5	1

1/3
h=210mm

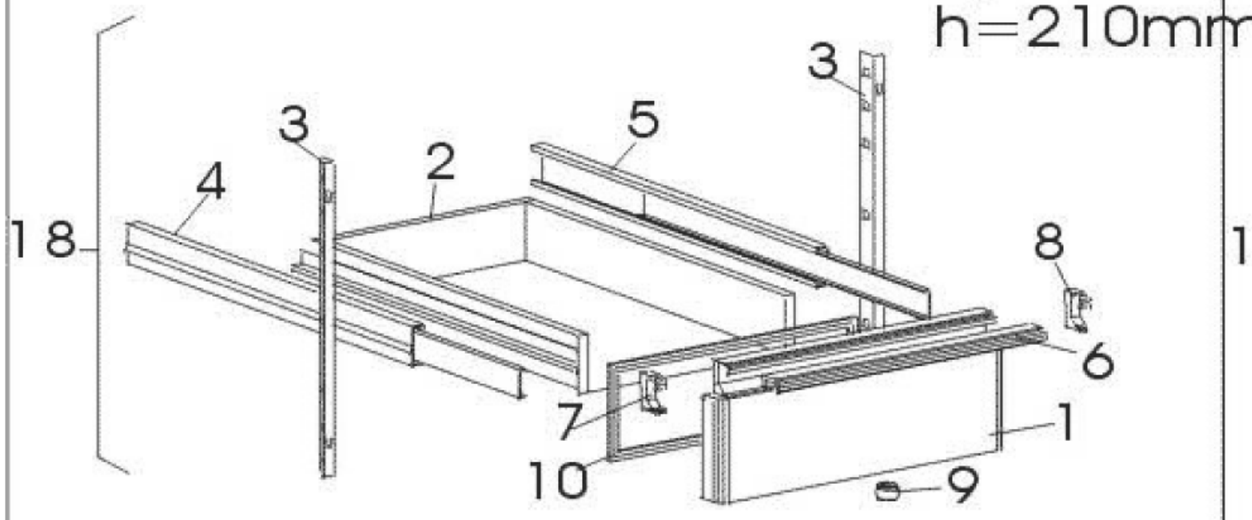

1/2
h=320mm

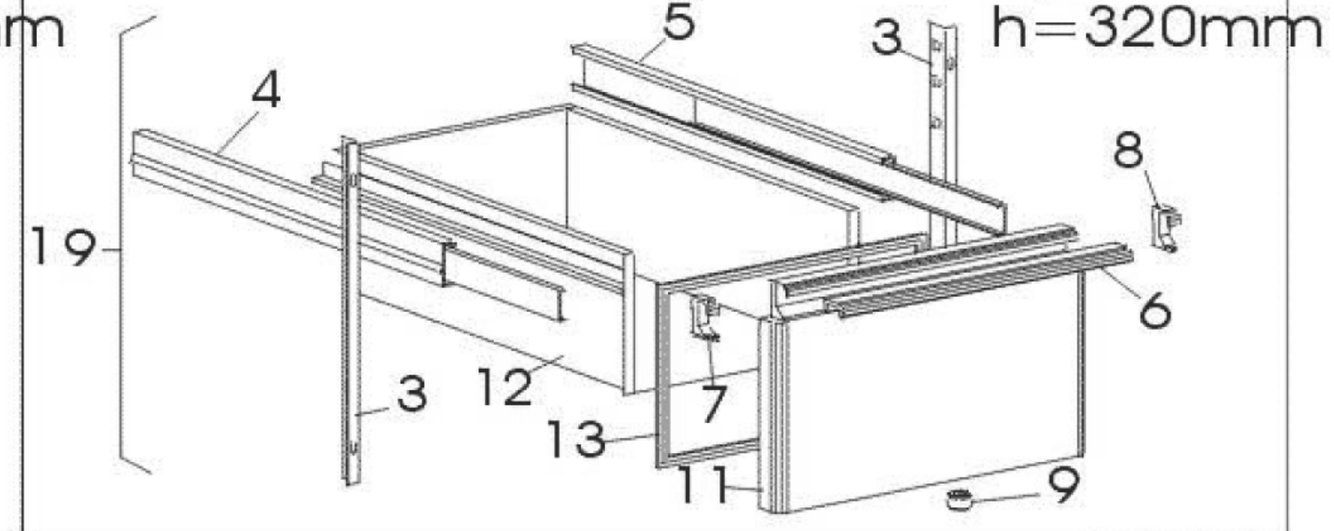

2/3
h=430mm

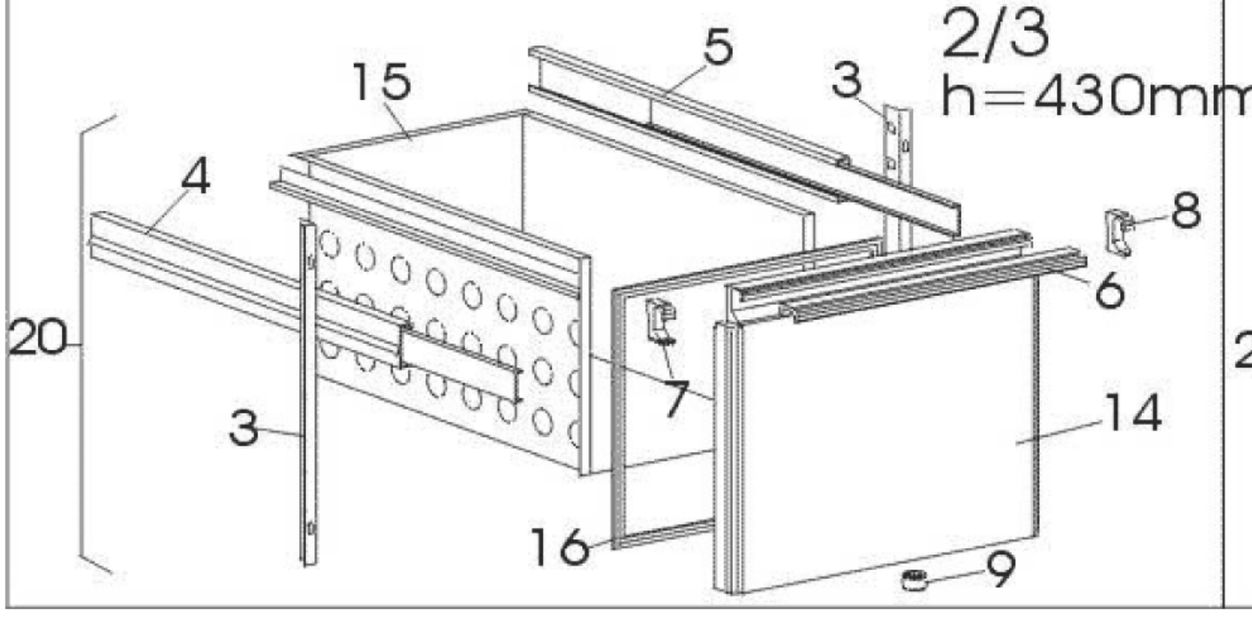

1/2 "F"
h=320mm

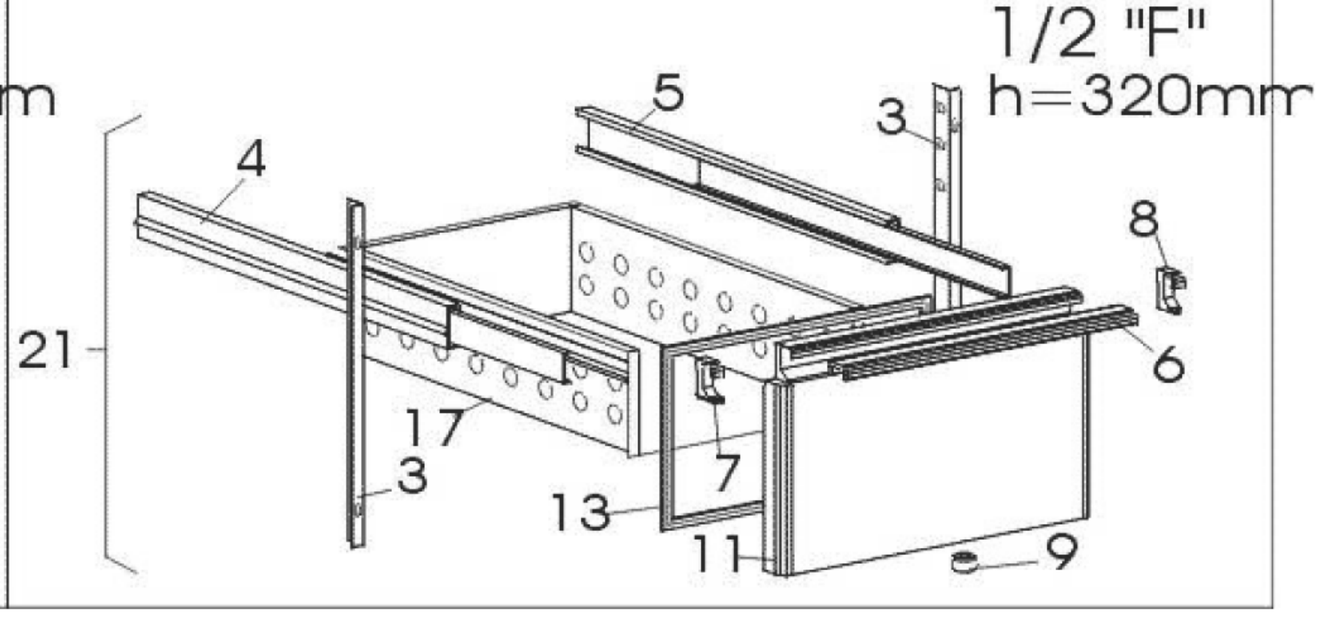

Modello Typ Model Modele Modelo

		KM1A KM1A/X KM1A/A	KM1A/2 KM1A/2X KM1A/2A	KM1A/4 KM1A/4X KM1A/4A	KM1A/11 KM1A/11X KM1A/11A	KM1B KM1B/X KM1B/A	KM1B/2 KM1B/2X KM1B/2A	KM1B/4 KM1B/4X KM1B/4A	KM1B/6 KM1B/6X KM1B/6A	KM1B/11 KM1B/11X KM1B/11A
Porte Ture Doors Portes Portas	SX	1	1	---	1	2	2	1	---	2
Gabetas	DX	1	---	---	---	1	---	---	---	---

		KM1B/22 KM1B/22X KM1B/22A	KM1C KM1C/X KM1C/A	KM1C/2 KM1C/2X KM1C/2A	KM1C/4 KM1C/4X KM1C/4A	KM1C/6 KM1C/6X KM1C/6A	KM1C/8 KM1C/8X KM1C/8A	KM1C/11 KM1C/11X KM1C/11A
Porte Ture Doors Portes Portas	SX	1	3	3	2	1	---	3
Gabetas	DX	---	1	---	---	---	---	---

SX

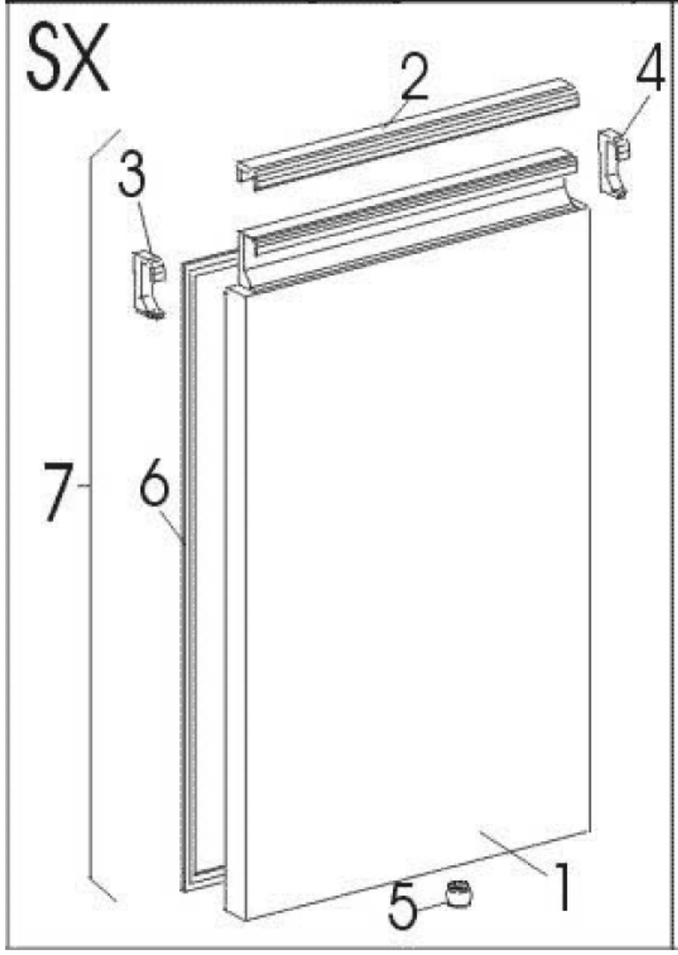

DX

